02-01 COOLER BOX ASSEMBLY

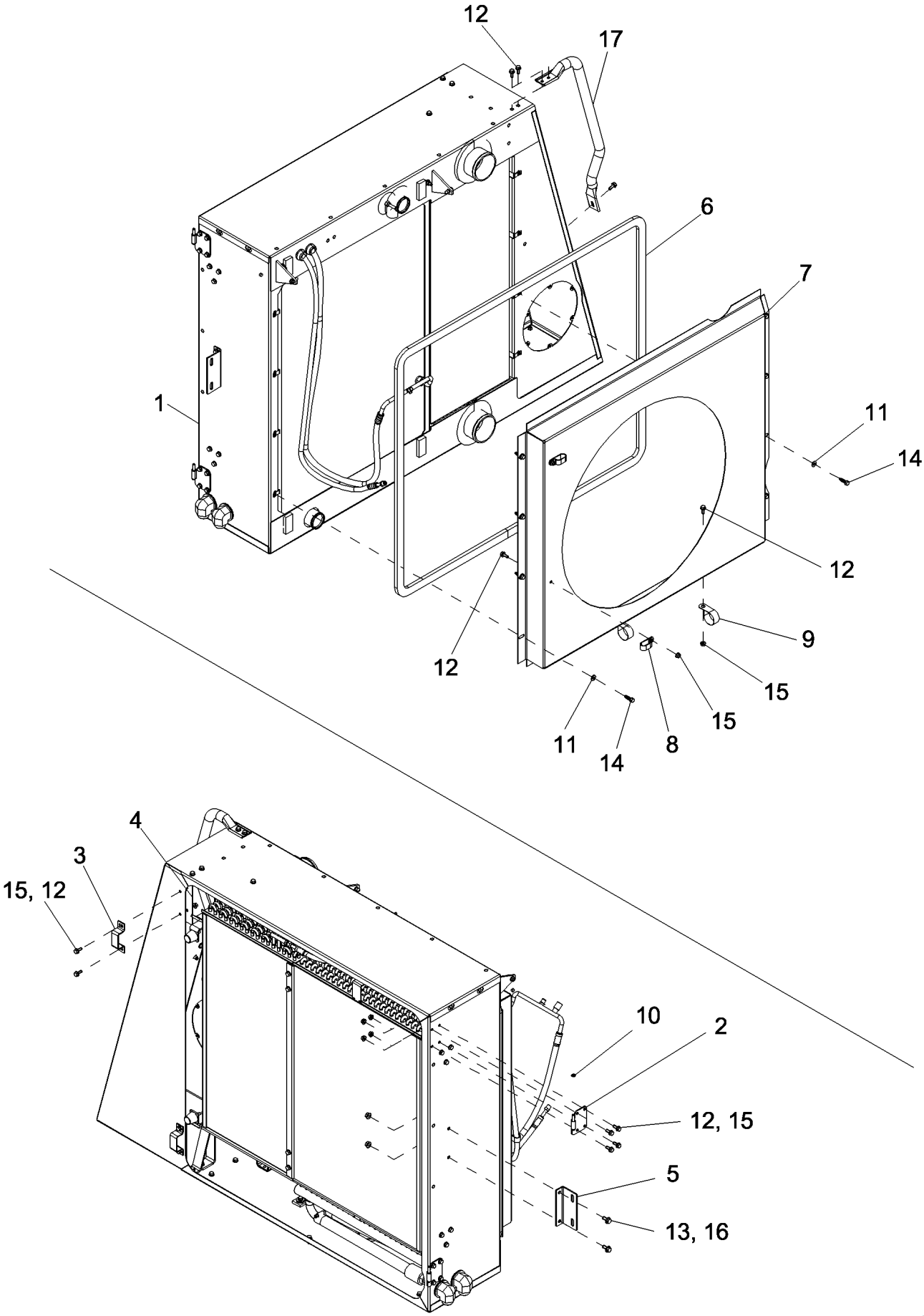

PDF created with pdfFactory trial version www.pdffactory.com

7088 AXIAL-FLOW COMBINE (EU) (4/08-)

02-01 COOLER BOX ASSEMBLY

ссылка	Номер детали	Кол-во	Описание
1	REF	1	INSTRUCTION, COOLER BOX, See Figure 02-02
2	87654391	2	HINGE, Cooler Door Lower
3	87684093	2	BRACKET, Cooler Door Latch
4	87589924	2	ANGLE, Oil Cooler Latch Support
5	87595611	1	BRACKET, Vertical Hinge Support, Rear
6	NS	1	NOT SERVICED, SEAL, Fan Shroud, 4215 mm (165.94 in), Cut From 1319664C3
7	87617160	1	SHEET METAL, Engine Fan Shroud, 5088, 6088
7	87314145	1	SHEET ASSY., Engine Fan Shroud, 7088
8	485093C1	2	CLAMP, Medium Duty
9	515-25476	2	CLAMP, 1 7/8", Insul, 1/2" Bolt,
10	86985597	2	WASHER,
11	86625263	8	WASHER, M8 x 20 x 1.6,
12	87656137	21	BOLT, Hex Flg, M8 x 20, 10.9, Full Thd,
13	857-10020	2	BOLT, Hex Flg, M10 x 20, 10.9,
14	1327545C1	8	SCREW,
15	86507066	16	NUT, M8 x 1.25, Flg, Cl 10,
16	86050279	2	NUT, M10 x 1.5, Flg, Cl 10,
17	87671877	1	HANDRAIL, Cooler Box

PDF created with pdfFactory trial version www.pdffactory.com

02-01A UPPER AND LOWER RADIATOR HOSES

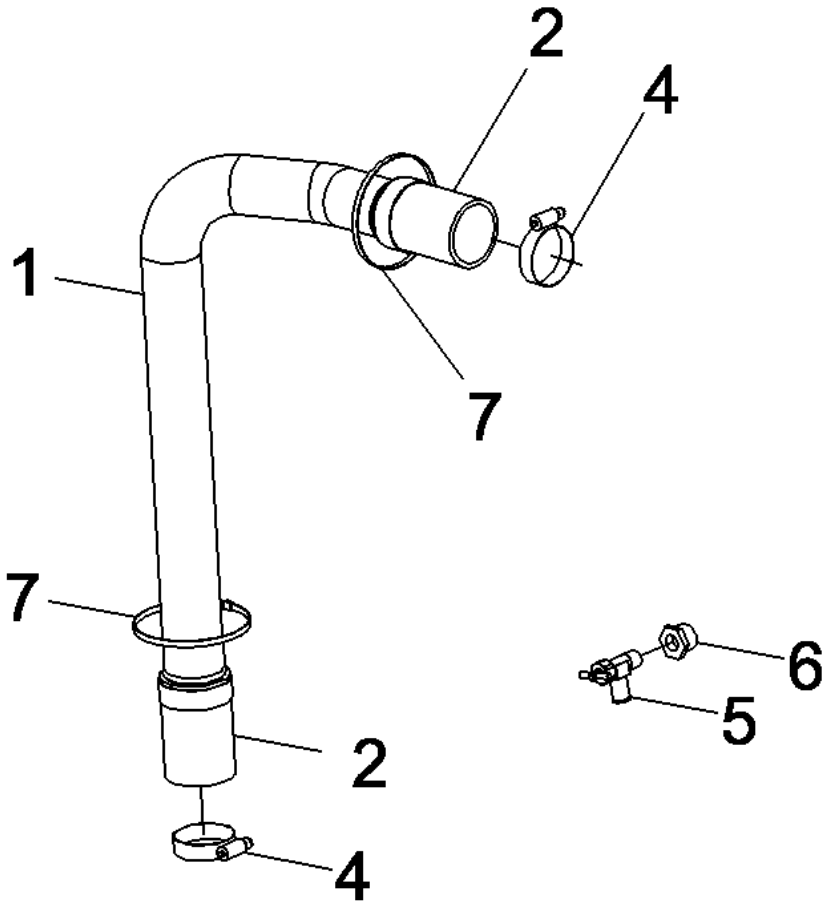

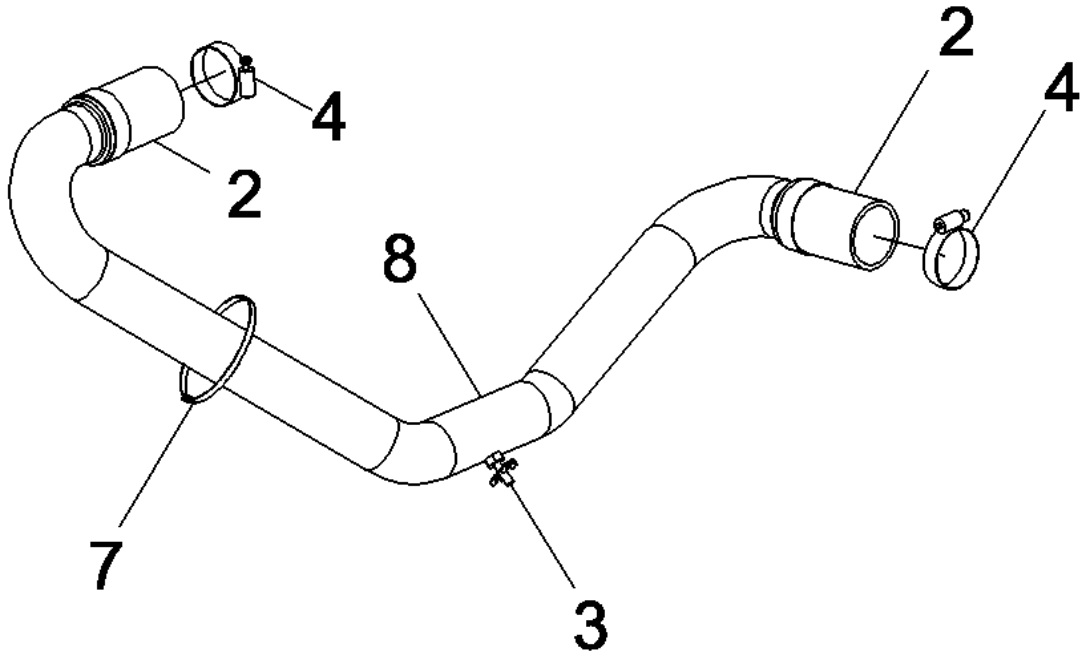

PDF created with pdfFactory trial version www.pdffactory.com

7088 AXIAL-FLOW COMBINE (EU) (4/08-)

02-01A UPPER AND LOWER RADIATOR HOSES

ссылка	Номер детали	Кол-во	Описание
1	87385493	1	TUBE ASSY., Upper Radiator, Inc. 2
2	87402765	4	HOSE,
3	86625234	1	COCK, DRAIN, Lower Radiator Tube
4	214-3248	4	CLAMP, HOSE, 2.25/3.125 HD Worm, W/liner,
5	301803R1	2	VALVE, SHUT-OFF,
6	221-1092	2	REDUCER, Hex, 3/4" x 3/8" NPT,
7	306132C1	3	STRAP, CABLE, .30" x 14.5",
8	87385496	1	TUBE, HEATER, Lower Radiator, Inc. 2

PDF created with pdfFactory trial version www.pdffactory.com

02-02 COOLER BOX, RADIATOR, CHARGE AIR COOLER, OIL/CONDENSER COOLER

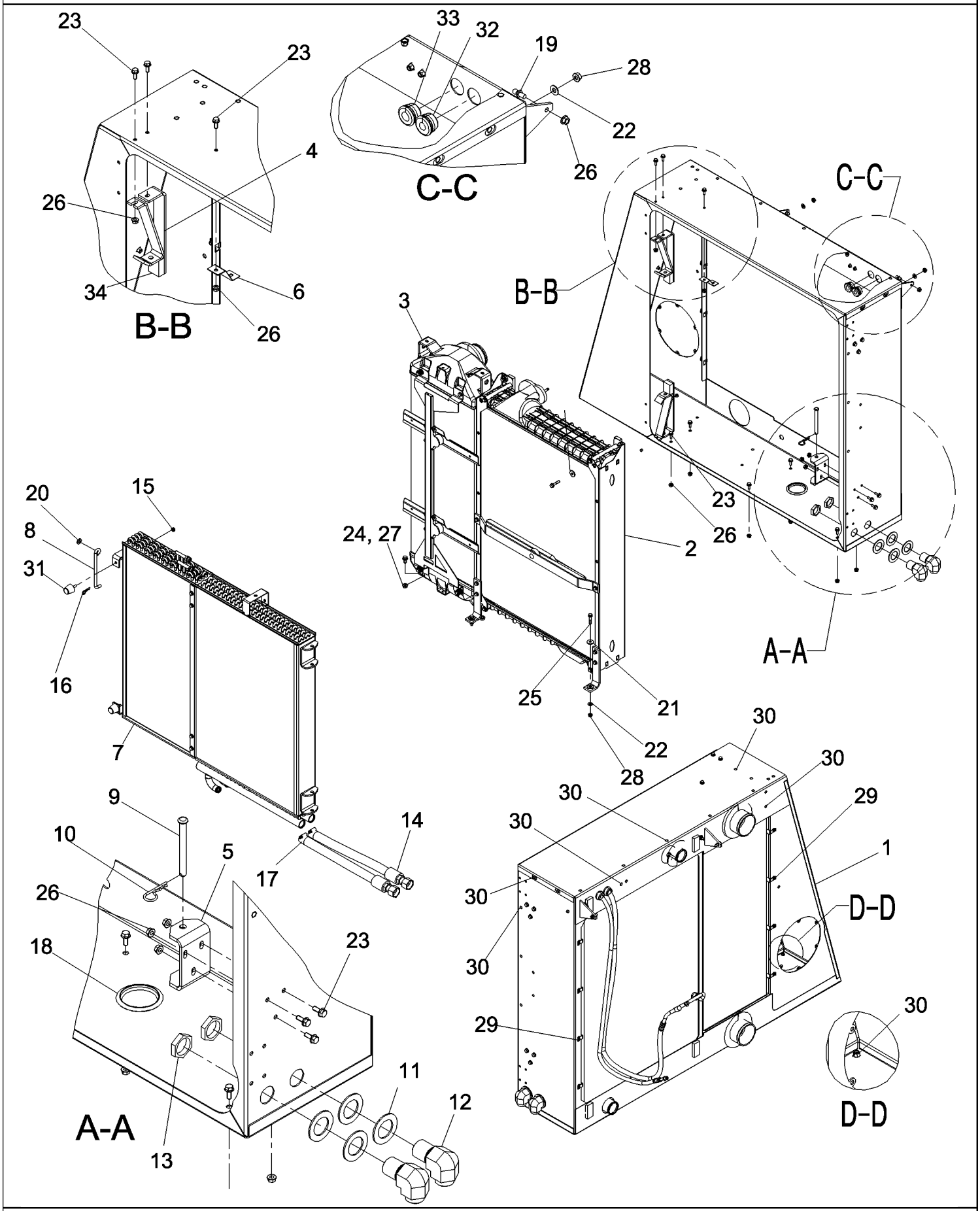

PDF created with pdfFactory trial version www.pdffactory.com

7088 AXIAL-FLOW COMBINE (EU) (4/08-)

02-02 COOLER BOX, RADIATOR, CHARGE AIR COOLER, OIL/CONDENSER COOLER

ссылка	Номер детали	Кол-во	Описание
1	87679524	1	ASSEMBLY, Cooler, Stationary Air Screen
2	REF	1	INSTRUCTION, RADIATOR ASSEMBLY, Engine, See Figure 02-03
3	REF	1	INSTRUCTION, CHARGE AIR COOLER With Wiper, See Figure 02-04
4	87423364	2	SUPPORT, Oil Cooler Lower
5	87429534	2	CHANNEL, Oil Cooler Side
6	413012A1	1	BRACKET, Charge Air Cooler Mounting
7	REF	1	INSTRUCTION, COOLER COMBO ASSEMBLY, See Figure 02-05
8	87575232	1	ROD, Oil Cooler Prop
9	439-5880	2	PIN, HEADED, 1/2" x 5",
10	480523R1	2	SPLIT PIN/SAFETY PIN,
11	495-81224	4	WASHER, 1 17/32" x 2 1/2" x .109",
12	201-363	2	ELBOW, 90є, 1 7/16"-12, Blkhd, ORFS,
13	201-908	2	NUT, LOCK, Blkhd, 1 7/16"-12,
14	87566737	2	HOSE ASSY., Hydraulic Oil Cooler
15	86521605	2	NUT, Flg, 5/16"-18, G5,
16	216698	1	HAIR PIN COTTER, Int, 5/16" x 1.75" x 0.125",
17	214-3228	2	CLAMP, HOSE, 1.00/1.875 HD Worm, W/liner,
18	87000778	1	PLUG, Clean Out Hole
19	83952214	2	PIN, BALL,
20	86511324	1	WASHER, M12 x 24 x 2.5,
21	140041	4	WASHER, M8 x 28 x 3,
22	86625263	4	WASHER, M8 x 20 x 1.6,
23	87656137	17	BOLT, Hex Flg, M8 x 20, 10.9, Full Thd,
24	857-10020	2	BOLT, Hex Flg, M10 x 20, 10.9,
25	857-8040	4	BOLT,
26	86507066	19	NUT, M8 x 1.25, Flg, Cl 10,
27	86050279	2	NUT, M10 x 1.5, Flg, Cl 10,
28	86619801	4	NUT, LOCK, M8 x 1.25, Flg, Cl 8,
29	410009A1	8	NUT,
30	87284531	23	NUT,
31	87109195	2	BUMPER,
32	87107420	1	GROMMET,
33	86976974	1	GROMMET,
34	187884C1	2	SEAL,

PDF created with pdfFactory trial version www.pdffactory.com

02-03 RADIATOR ASSEMBLY, ENGINE

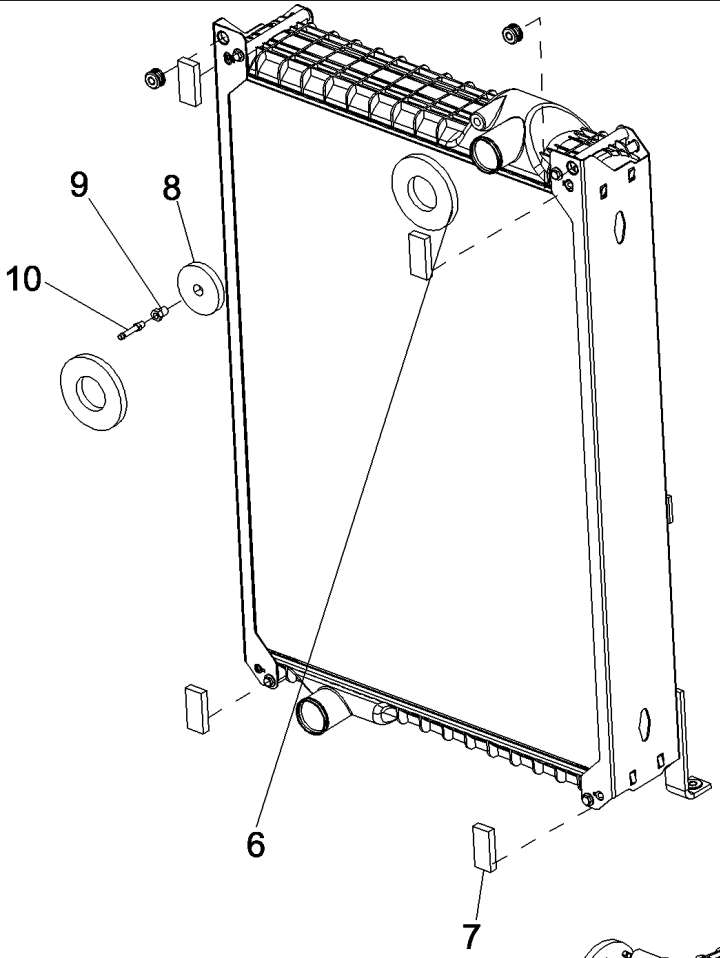

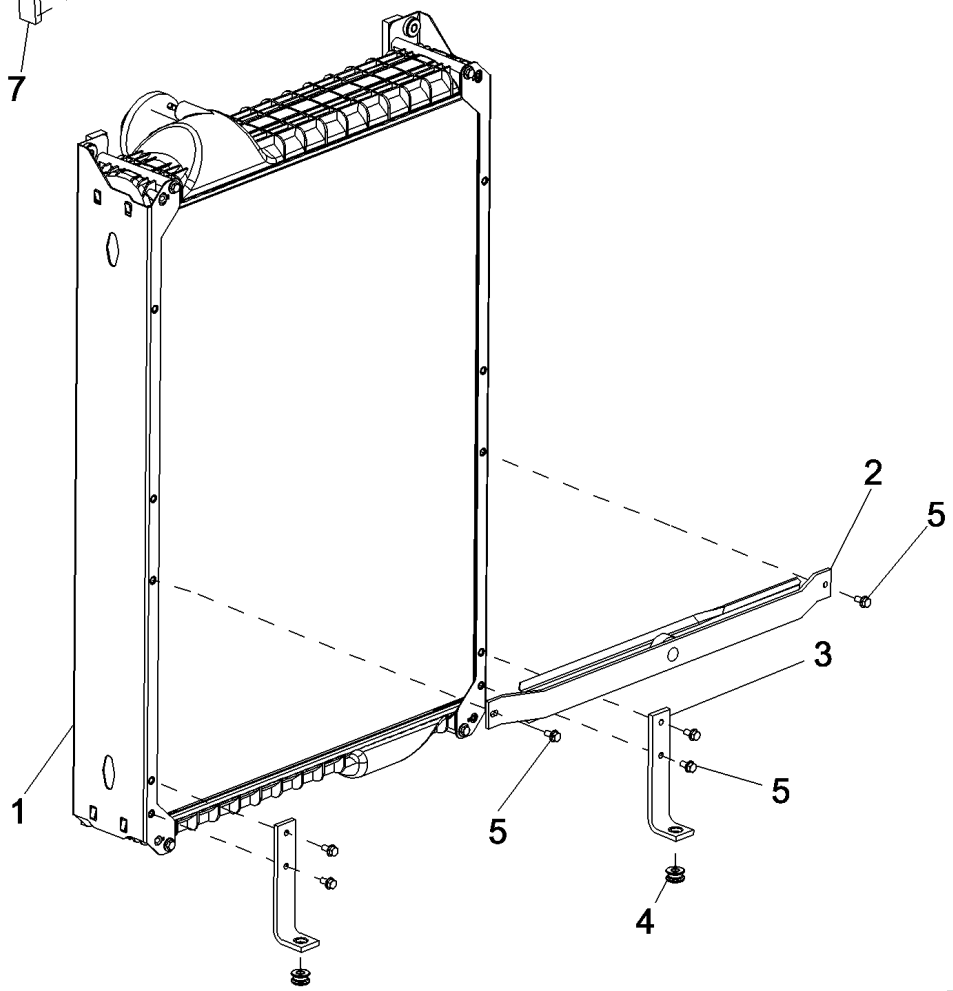

PDF created with pdfFactory trial version www.pdffactory.com

7088 AXIAL-FLOW COMBINE (EU) (4/08-)

02-03 RADIATOR ASSEMBLY, ENGINE

ссылка	Номер детали	Кол-во	Описание
1	87302088	1	RADIATOR, Engine
2	87432132	1	FAN, Wiper, Radiator
3	411572A1	2	BRACKET, Radiator Isomount
4	434177A1	4	ISOLATOR,
5	844-8016	6	BOLT, Hex Flg, M8 x 16, 8.8,
6	NS	2	NOT SERVICED, SEAL, Radiator, 340 mm (13.39 in), Cut From 1319664C3
7	NS	4	NOT SERVICED, SEAL, Radiator, 70 mm (2.76 in), Cut From 1319664C3
8	NS	1	NOT SERVICED, SEAL, Radiator, 217 mm (8.54 in), Cut From 1319664C23
9	217-1034	1	REDUCER, 1/4"-18 Male NPTF x 1/8"-27 Female NPTF,
10	241173A1	1	FITTING,

PDF created with pdfFactory trial version www.pdffactory.com

02-04 CHARGE AIR COOLER WITH WIPER ASSEMBLY

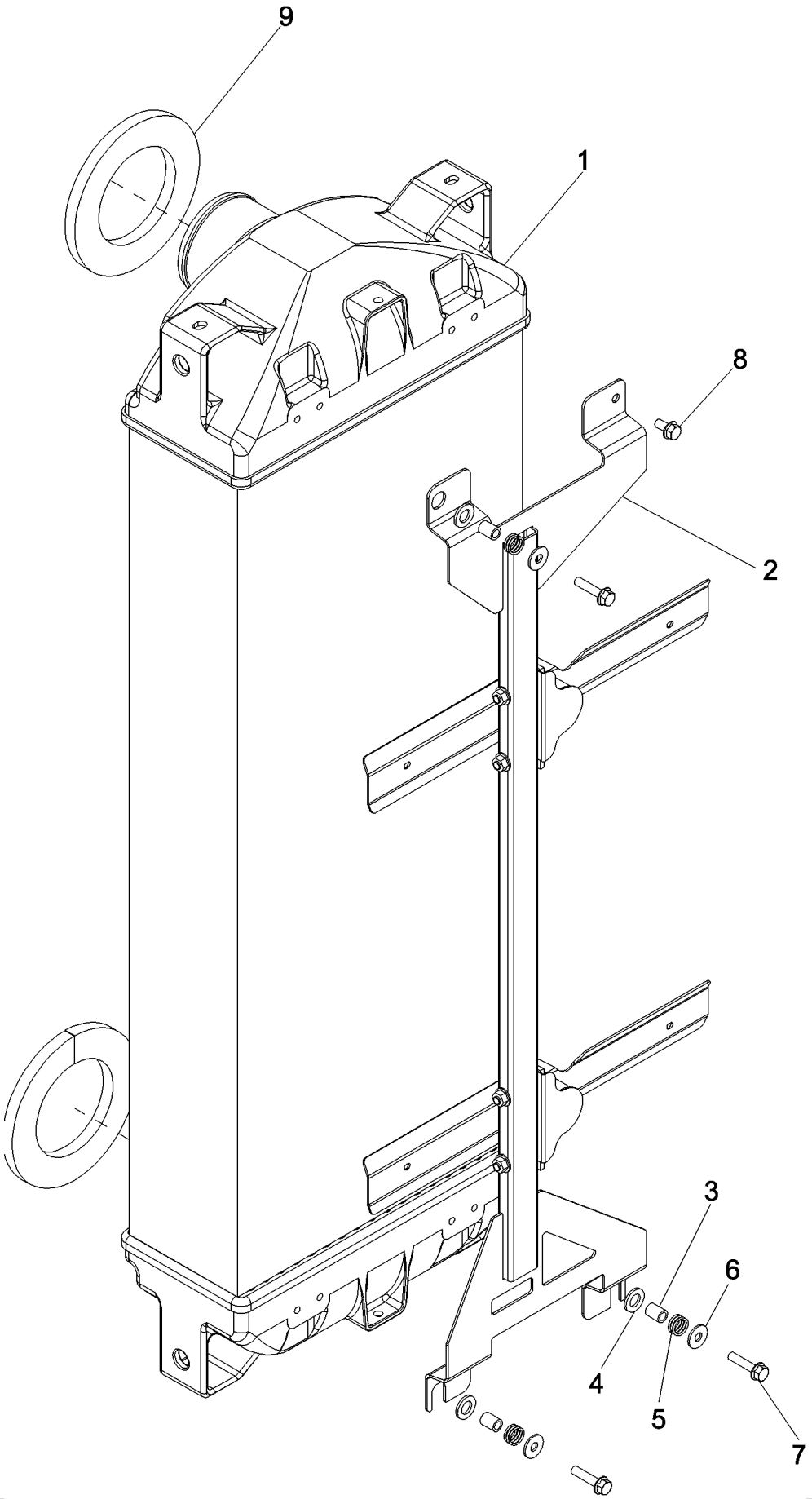

PDF created with pdfFactory trial version www.pdffactory.com

7088 AXIAL-FLOW COMBINE (EU) (4/08-)

02-04 CHARGE AIR COOLER WITH WIPER ASSEMBLY

ссылка	Номер детали	Кол-во	Описание
1	438250A2	1	AFTERCOOLER, , 5088, 6088
1	87325480	1	COOLER, , 7088
2	87381181	1	ASSEMBLY, Wiper
3	87392240	3	SPACER,
4	140018	3	WASHER, M12 x 24 x 2.5,
5	87392233	3	SPRING, COMPRESSION,
6	86639313	3	WASHER, M8 x 20 x 1.6,
7	87695419	3	BOLT,
8	87681207	1	BOLT,
9	NS	2	NOT SERVICED, SEAL, Fan Shroud, 520 mm (20.47 in), Cut From 1319664C3

PDF created with pdfFactory trial version www.pdffactory.com

7088 AXIAL-FLOW COMBINE (EU) (4/08-)

02-05 OIL/CONDENSER COOLER COMBO ASSEMBLY

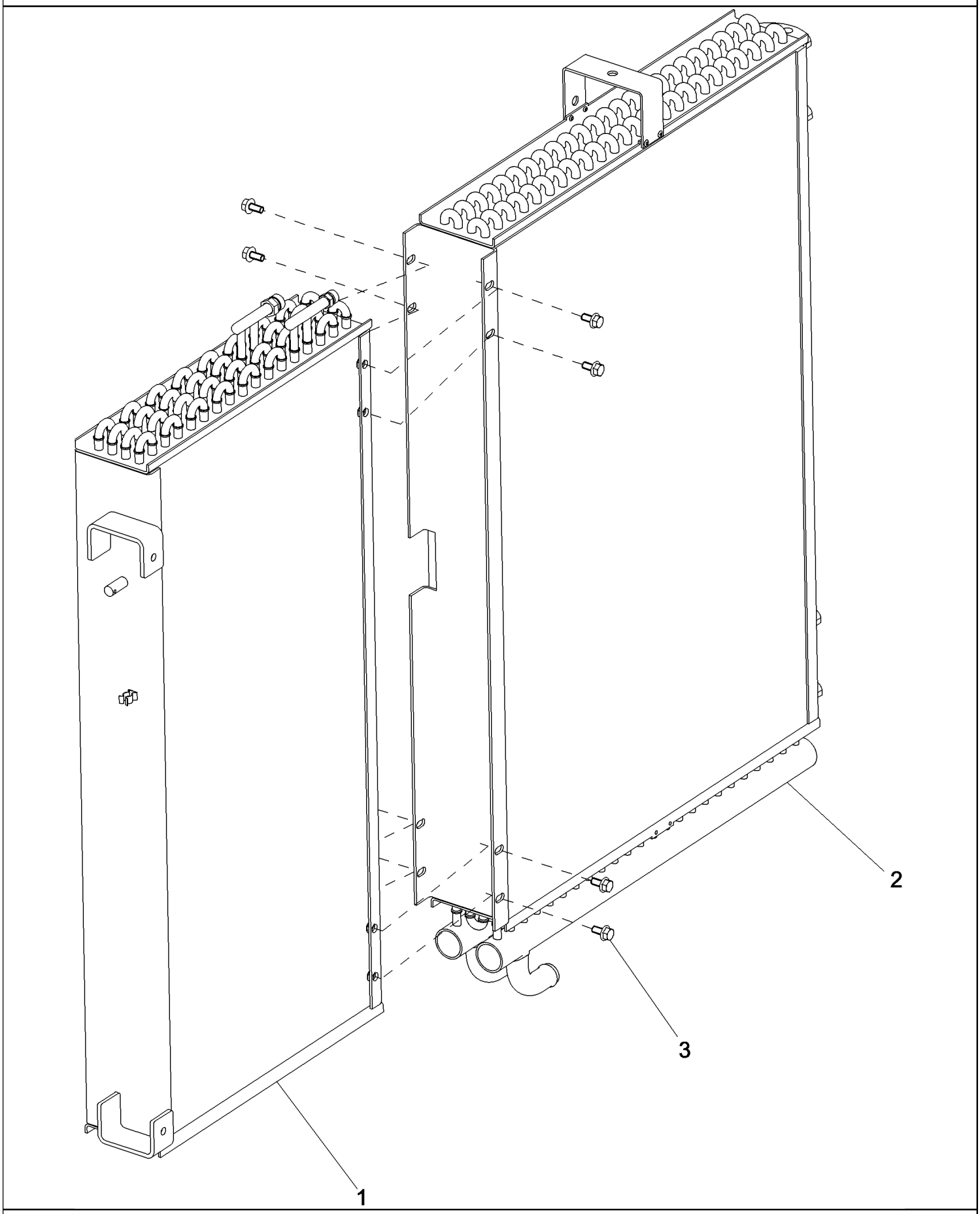

PDF created with pdfFactory trial version www.pdffactory.com

7088 AXIAL-FLOW COMBINE (EU) (4/08-)

02-05 OIL/CONDENSER COOLER COMBO ASSEMBLY

ссылка	Номер детали	Кол-во	Описание
1	87559914	1	COOLER, Condenser
2	87559913	1	COOLER, OIL,
2	87614591	1	COOLER, OIL, Rice, 7088
3	87681207	8	BOLT,

PDF created with pdfFactory trial version www.pdffactory.com

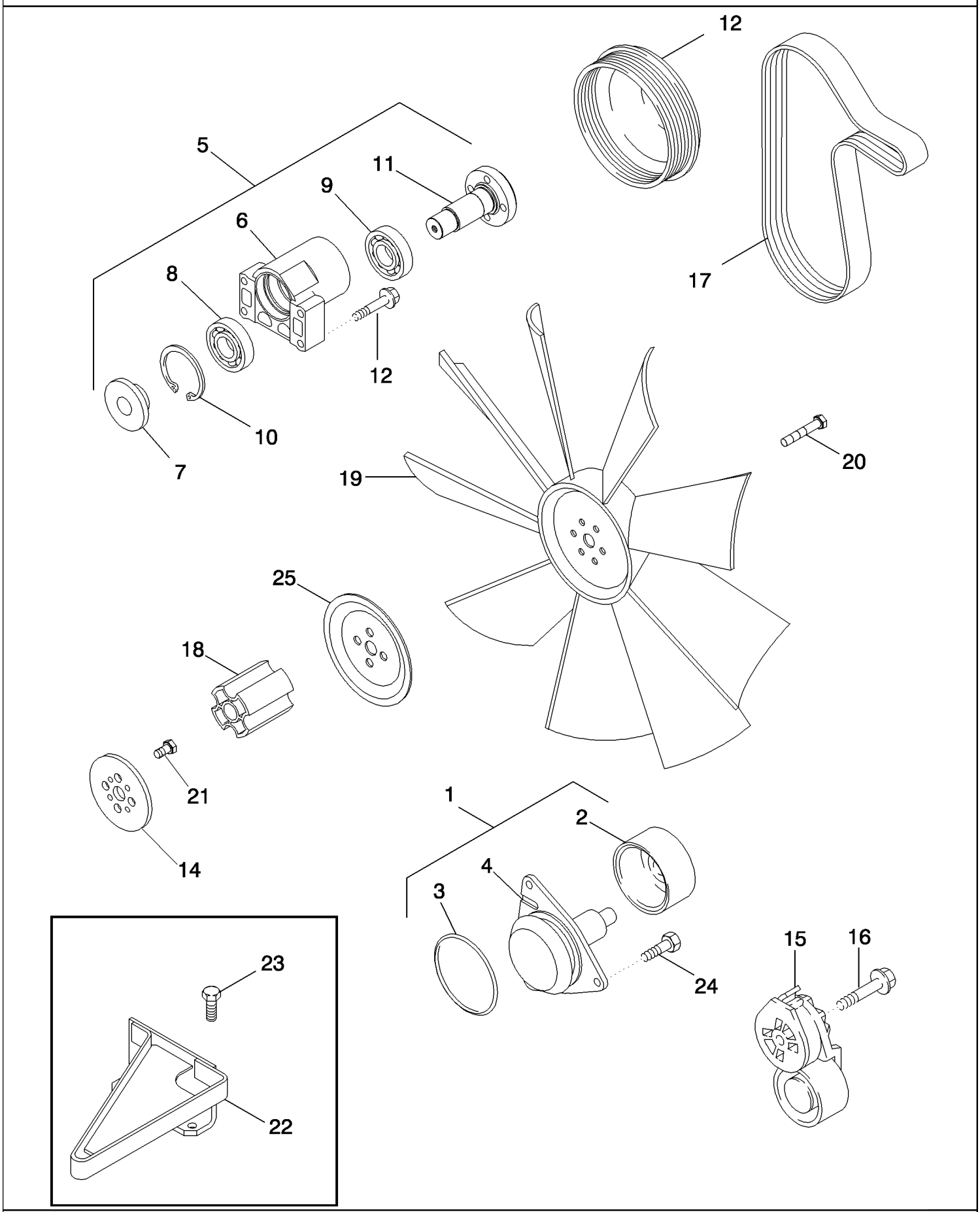

PDF created with pdfFactory trial version www.pdffactory.com

7088 AXIAL-FLOW COMBINE (EU) (4/08-)

02-06 WATER PUMP SYSTEM

ссылка	Номер детали	Кол-во	Описание
1	87308650	1	KIT, WATER PUMP REPAIR, Inc. 2 - 4
2	NSS	1	NOT SERVICED SEPARATELY, PULLEY
3	238-5244	1	O-RING, -244, 70 Duro, 4.234" ID x .139" Thk,
4	NSS	1	NOT SERVICED SEPARATELY, PUMP
5	87408931	1	SUPPORT, Fan, Inc. 6 - 10
6	NSS	1	NOT SERVICED SEPARATELY, HUB
7	NSS	1	NOT SERVICED SEPARATELY, RETAINER
8	NSS	1	NOT SERVICED SEPARATELY, BEARING, BALL
9	NSS	1	NOT SERVICED SEPARATELY, BEARING, BALL
10	NSS	1	NOT SERVICED SEPARATELY, SNAP RING
11	NSS	1	NOT SERVICED SEPARATELY, HUB
12	854-10050	4	BOLT, Hex Flg, M10 x 50, 10.9,
13	J926854	1	PULLEY, Accessory Drive
14	431716A1	1	PULLEY,
15	87317615	1	TENSIONER, BELT,
16	J282433	1	SCREW, Hex Flg, M10 x 1.5 x 85,
17	87755884	1	BELT,
18	A184751	1	SPACER, 75 mm
19	87305330	1	FAN, 9 Blade, 7088
19	87313617	1	FAN, 9 Blade, 5088, 6088
20	87695415	4	BOLT, BOLT, Hex, M10 x 105, 8.8
21	844-10025	4	BOLT, Hex Flg, M10 x 25, 8.8, Full Thd,
22	87411538	1	GUIDE, Engine Fan Belt
23	87698835	2	BOLT,
24	87351192	3	BOLT,
25	87573769	1	SHIELD, SPLASH, Fan Hub

PDF created with pdfFactory trial version www.pdffactory.com

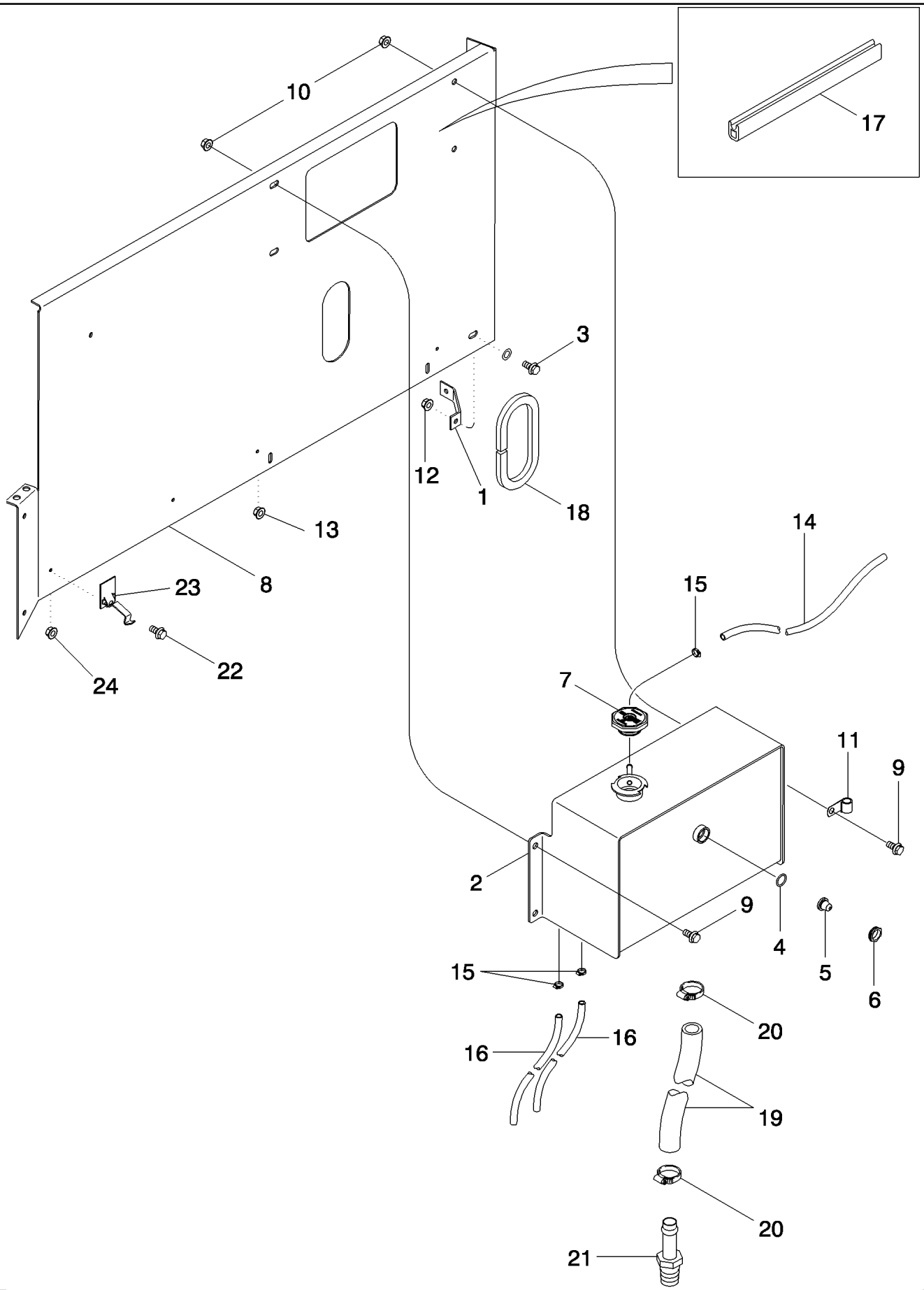

PDF created with pdfFactory trial version www.pdffactory.com

7088 AXIAL-FLOW COMBINE (EU) (4/08-)

02-07 DEAERATION SYSTEM

ссылка	Номер детали	Кол-во	Описание
1	87388443	1	BRACKET, Engine Shield
2	87703236	1	TANK, Deaeration
3	87656137	4	BOLT, Hex Flg, M8 x 20, 10.9, Full Thd,
4	238-6115	1	O-RING, -115, 90 Duro, .674" ID x .103" Thk,
5	86990536	1	LENS, Sight
6	86990537	1	NUT, Lens Retainer
7	87109814	1	CAP, FILLER, Deaeration Tank
8	87627883	1	SHEET ASSY., Engine Cover Rear
9	857-10020	4	BOLT, Hex Flg, M10 x 20, 10.9,
10	86050279	4	NUT, M10 x 1.5, Flg, Cl 10,
11	516-23127	1	CLAMP, J, 9/16" Insul, 3/8" Bolt,
12	86507066	1	NUT, M8 x 1.25, Flg, Cl 10,
13	87284531	2	NUT,
14	NS	1	NOT SERVICED, HOSE, Radiator Drain, 3680 mm (144.9"), Cut From 86989959
15	214-1704	5	CLAMP, HOSE, #4, 0.25/0.62 Type M Worm,
16	87308562	2	SLEEVE, Deaeration, Cut 960 mm (37.80") From Bulk Hose 86989959
17	1327979C1	2	MOLDING, Cut 287 mm (11-1/3") From 196707C1
18	87063C3	1	SEAL, Cut 406 mm (16") from 196707C1
19	NS	1	NOT SERVICED, HOSE Deareation Supply, Cut 1005 mm (39.6") From Bulk Hose B90928
20	214-1516	2	CLAMP, HOSE, #16, .81/1.50 Type F Worm, W/liner,
21	217-375	1	FITTING, 1" Hose X 3/4" NPTF Beaded,
22	440-1108	4	SCREW, Cross Pan Hd, #10-24 x 1/2",
23	167800C1	4	FASTENER,
24	231-51409	4	NUT, Flg, USR, #10-24,

PDF created with pdfFactory trial version www.pdffactory.com

7088 AXIAL-FLOW COMBINE (EU) (4/08-)

02-08 DOOR ASSEMBLY, STATIONARY AIR SCREEN

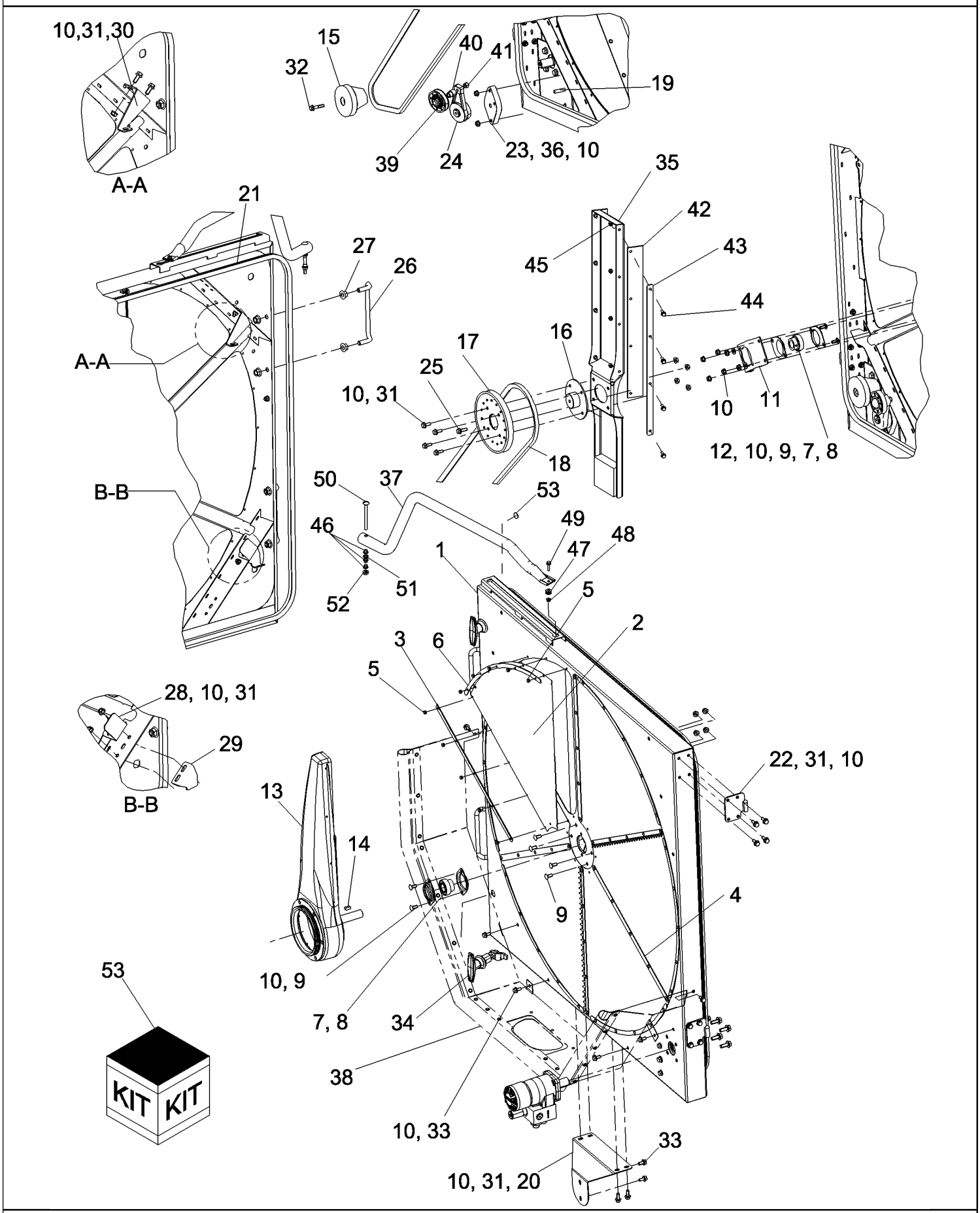

PDF created with pdfFactory trial version www.pdffactory.com

7088 AXIAL-FLOW COMBINE (EU) (4/08-)

02-08 DOOR ASSEMBLY, STATIONARY AIR SCREEN

ссылка	Номер детали	Кол-во	Описание
1	87625531	1	DOOR, Fixed Air Screen
2	87644459	6	SCREEN, Wedge Perorated Air
3	87646364	3	KNIFE, Stationary Air Screen Door
4	87644454	3	ANGLE, Stationary Air Screen Door
5	87644487	60	RIVET,
6	87693137	6	SUPPORT ASSY., Outer Retaining
7	86548974	4	FLANGE, Housing
8	325103	2	BEARING, BALL,
9	87682383	8	BOLT,
10	86507066	35	NUT, M8 x 1.25, Flg, Cl 10,
11	87682654	1	BRACKET, Stationary Air Screen Bearing
12	86625263	2	WASHER, M8 x 20 x 1.6,
13	87609366	1	KIT, Air Screen
14	10619520	1	KEY,
15	87682772	1	HOUSING, Pulley
16	87581597	1	PLATE, RETAINING,
17	87585076	1	PULLEY, Air Screen
18	87583785	1	BELT, Air Screen
19	160-104	1	BOLT, Hex Flg, 3/8"-16 x 1 3/4", G8,
20	87590718	1	SHEET ASSY., Suction Duct Strap
21	87598111	1	SEAL, Door
22	87654393	2	HINGE, Cooler Door Upper
23	87663397	1	SPACER, Tensioner
24	87607843	1	IDLER, Belt Tensioner
25	87698833	1	BOLT,
26	1329715C1	2	HANDLE, Rear Service Ladder
27	231-5148	8	NUT, Flg, USR, 1/2"-13,
28	87632645	1	ANGLE, Condenser Bumper Stationary Air Screen
29	87685964	1	BRACKET, Door Ramp
30	87634114	1	ANGLE, Condenser Bumper Stationary Air Screen, Top
31	87656137	20	BOLT, Hex Flg, M8 x 20, 10.9, Full Thd,
32	87698834	1	BOLT,
33	87681207	7	BOLT,
34	87283386	1	LATCH, 1/4 Turn Compression
35	84123676	1	BRACKET,
36	87695419	2	BOLT,
37	87755014	1	RAIL ASSY., Cooler Box Door
38	87746049	1	BRACKET, Cooler Box Blockoff
39	87607844	1	PULLEY, Belt Tensioner
40	87607847	1	SPACER, Tensioner Pulley
41	160-104	1	BOLT, Hex Flg, 3/8"-16 x 1 3/4", G8,

PDF created with pdfFactory trial version www.pdffactory.com

02-08 DOOR ASSEMBLY, STATIONARY AIR SCREEN

ссылка	Номер детали	Кол-во	Описание
42	87687393	2	SEAL, Blockoff
43	87687575	2	STRAP, Seal Retainer
44	87675531	8	BOLT,
45	87301498	8	NUT,
46	87674756	3	WASHER,
47	87670013	1	SPACER, Safety Rail
48	86619800	1	NUT, LOCK, M6 x 1, Flg, Cl 8,
49	87670758	1	BOLT,
50	9811147	1	BOLT, CARRIAGE,
51	86624184	1	WASHER, M8 x 16 x 1.6,
52	86619801	1	NUT, LOCK, M8 x 1.25, Flg, Cl 8,
53	87687385	1	KIT, SERVICE, Stationary Air Screen Brush, DIA

PDF created with pdfFactory trial version www.pdffactory.com

02-09 STATIONARY AIR SCREEN GUARD

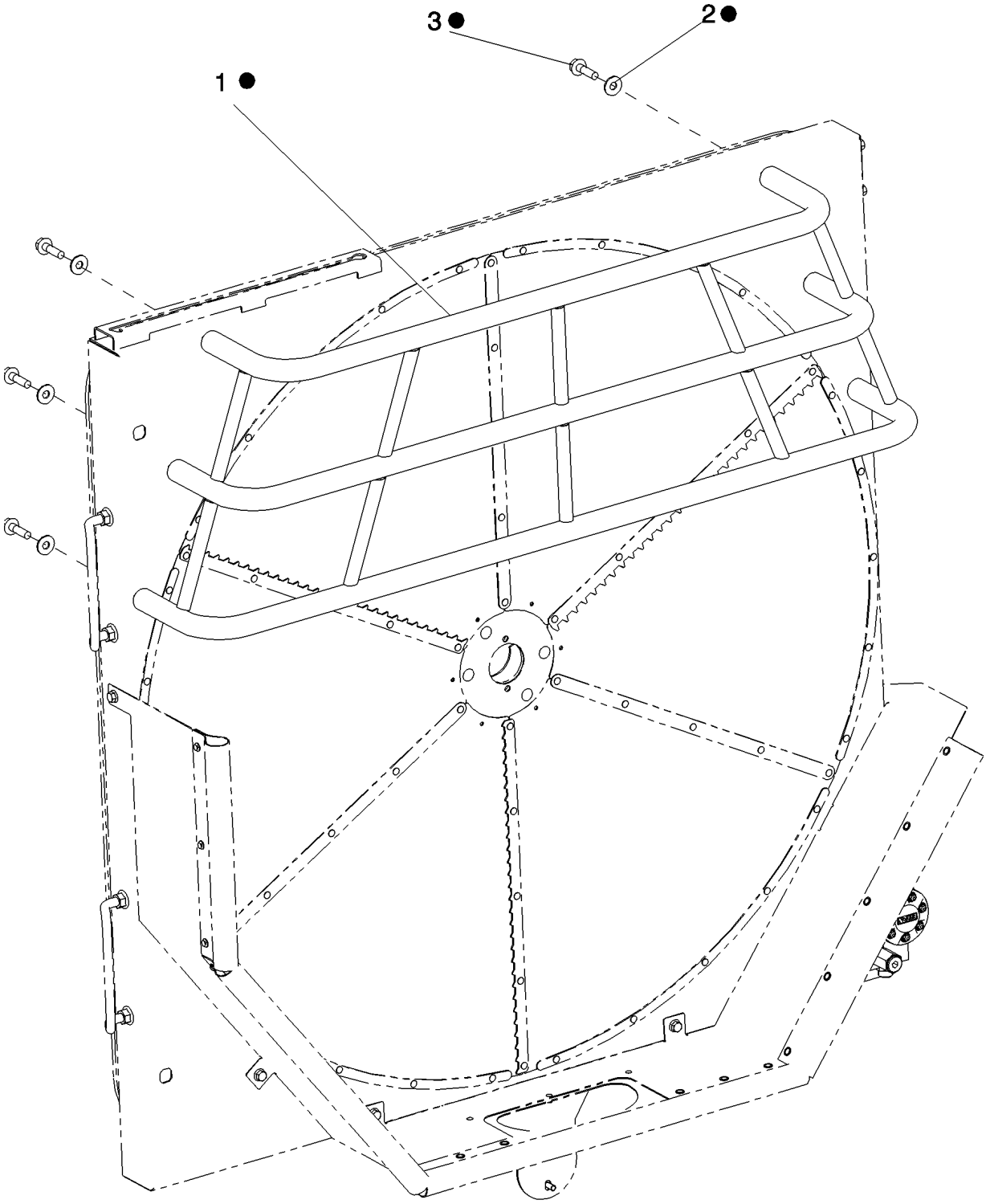

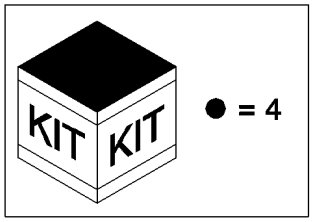

PDF created with pdfFactory trial version www.pdffactory.com

7088 AXIAL-FLOW COMBINE (EU) (4/08-)

02-09 STATIONARY AIR SCREEN GUARD

ссылка	Номер детали	Кол-во	Описание
1	87492017	1	GUARD ASSY., Stationary Air Screen
2	378243	6	WASHER, M8,
3	87030775	6	BOLT, Hex Flg, M8 x 30, 10.9, Full Thd,
4	87735624	1	DIA KIT, HARVESTER, Stationary Air Screen Guard, Inc. 1-3

PDF created with pdfFactory trial version www.pdffactory.com

02-10 STATIONARY AIR SCREEN VACUUM SYSTEM

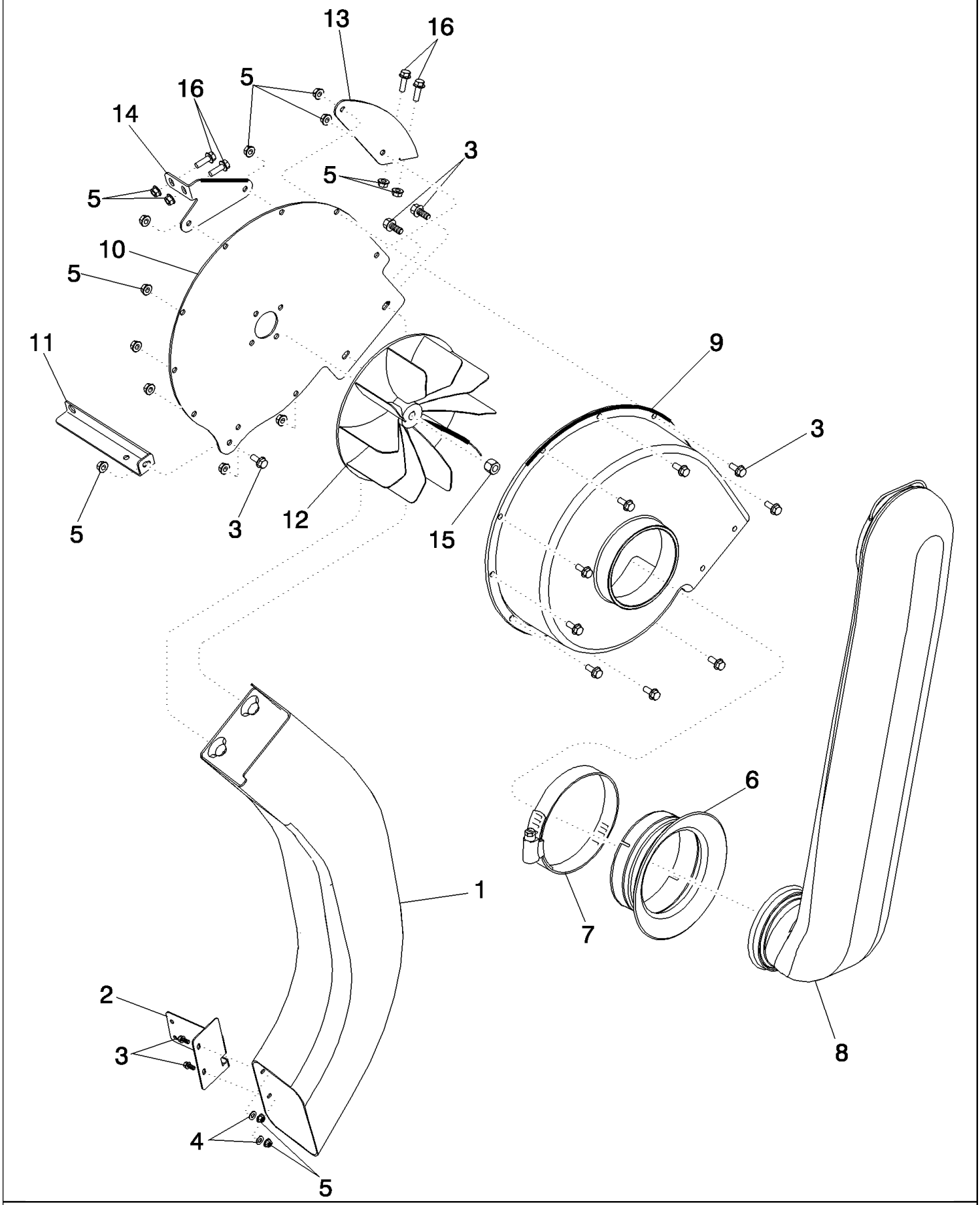

PDF created with pdfFactory trial version www.pdffactory.com

7088 AXIAL-FLOW COMBINE (EU) (4/08-)

02-10 STATIONARY AIR SCREEN VACUUM SYSTEM

ссылка	Номер детали	Кол-во	Описание
1	87596685	1	DUCT, Discharge
2	87596688	1	BRACKET, Discharge Duct
3	87656137	14	BOLT, Hex Flg, M8 x 20, 10.9, Full Thd,
4	86639313	2	WASHER, M8 x 20 x 1.6,
5	86507066	18	NUT, M8 x 1.25, Flg, Cl 10,
6	87479340	1	SPACER, Air Inlet
7	214-1496	1	CLAMP, HOSE, #96, 5.56/6.50 Type F Worm, W/liner,
8	87692664	1	DUCT, Fixed Screen Outer
9	87479341	1	HOUSING, Vacuum Fan
10	87596053	1	BRACKET, Suction Fan
11	87596063	1	BRACKET, Suction Fan
12	87385913	1	FAN, Vacuum
13	87596066	1	BRACKET, Motor Plate
14	87596068	1	BRACKET, Motor Plate
15	87366201	1	NUT,
16	87698833	4	BOLT,
17	87472744	1	RING, Outside
18	87363448	1	SEAL, RUBBER, Duct
19	87717348	1	WIRE, Stationary Air Screen Hub Retaining
20	9824326	8	WASHER, M5,
21	445395	8	RIVET, Pop, M4.8 x 18.1,

PDF created with pdfFactory trial version www.pdffactory.com

02-11 INTAKE SYSTEM, CHARGE AIR COOLER

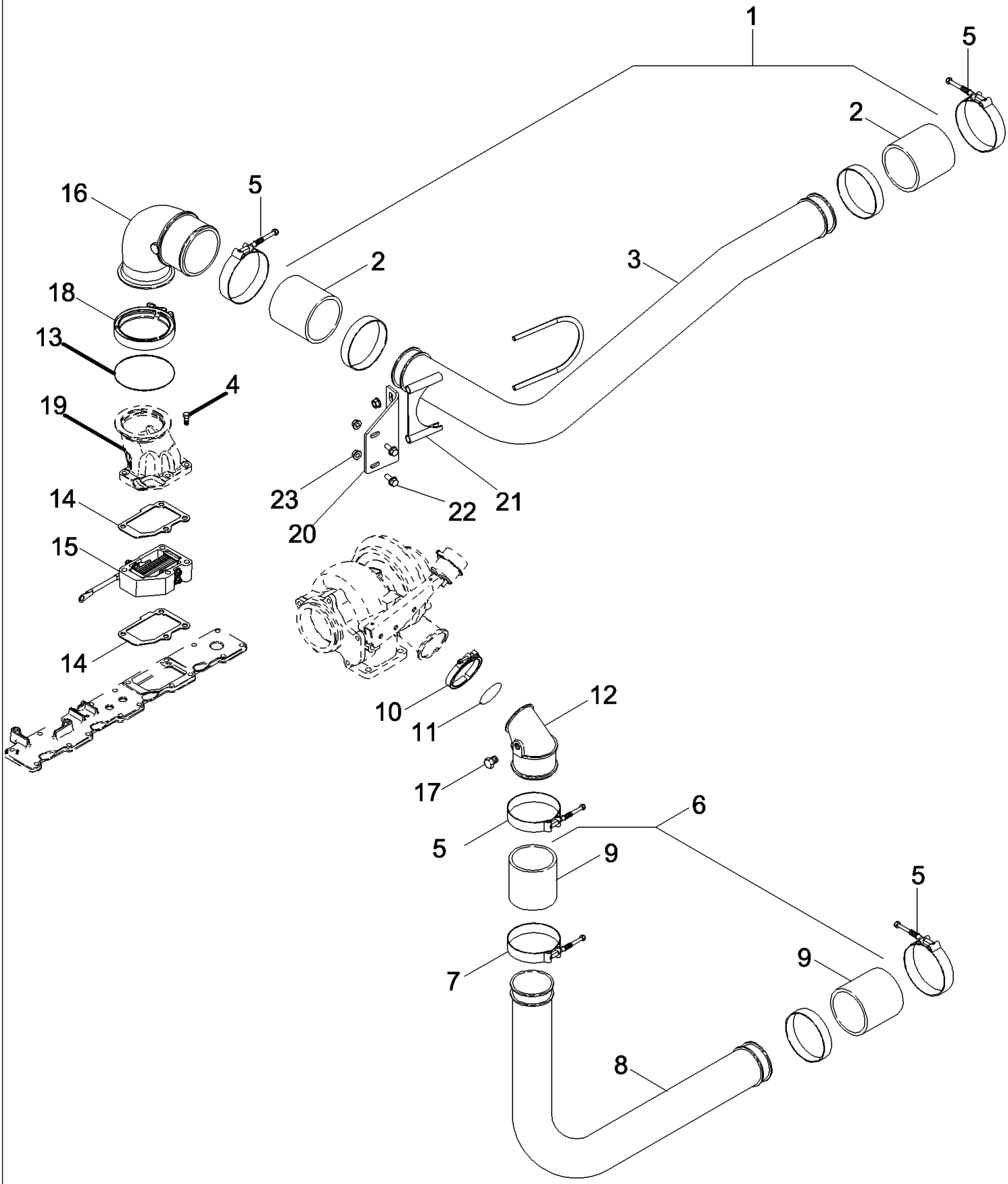

PDF created with pdfFactory trial version www.pdffactory.com

7088 AXIAL-FLOW COMBINE (EU) (4/08-)

02-11 INTAKE SYSTEM, CHARGE AIR COOLER

ссылка	Номер детали	Кол-во	Описание
1	87385310	1	TUBE, AIR INTAKE, Charge Air Cooler, Cold Side, Inc. 2, 3
2	87402762	1	HOSE, 4 Inch
3	NSS	1	NOT SERVICED SEPARATELY, TUBE
4	845-8080	4	BOLT, Hex Flg, M8 x 80, 8.8,
5	87420676	4	CLAMP, HOSE, 4 Inch
6	87385314	1	TUBE, Charge Air Cooler, Hot Side, Inc. 7 - 9
7	87420676	1	CLAMP, HOSE,
8	NSS	1	NOT SERVICED SEPARATELY, TUBE
9	87402761	2	HOSE, 4 Inch
10	J069053	1	CLAMP, Turbo Outlet
11	J883284	1	O-RING,
12	87301923	1	ELBOW, Turbo Outlet
13	87350420	1	SEAL,
14	87335272	1	GASKET,
15	87753829	1	HEATER, Air Intake
16	87350416	1	ELBOW, Engine Intake Manifold
17	217-84	2	PLUG, Hex Hd, 1/8"-27, Brass,
18	J067979	1	CLAMP,
19	87340026	1	CONNECTOR, MULTIPOLE, Air Intake
20	84147605	1	BRACKET, Charge Air Cooler Tube Support
21	A162896	1	CLAMP, Charge Air Cooler Tube Support
22	87656137	2	BOLT, Hex Flg, M8 x 20, 10.9, Full Thd,
23	86507066	2	NUT, M8 x 1.25, Flg, Cl 10,

PDF created with pdfFactory trial version www.pdffactory.com

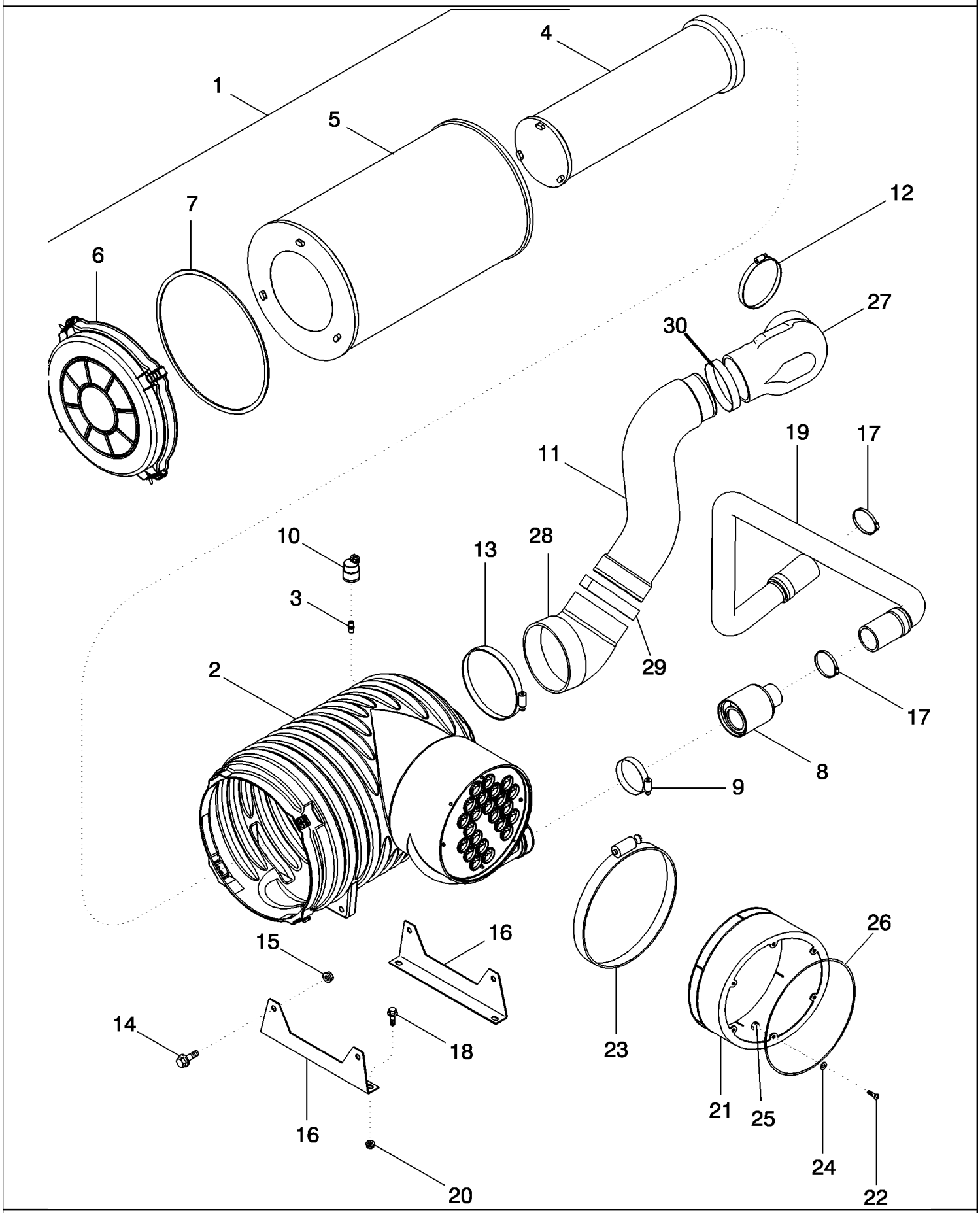

PDF created with pdfFactory trial version www.pdffactory.com

7088 AXIAL-FLOW COMBINE (EU) (4/08-)

02-12 AIR CLEANER - AIR INDUCTION SYSTEM

ссылка	Номер детали	Кол-во	Описание
1	414188A3	1	AIR CLEANER, Inc. 2 - 10
2	NSS	1	NOT SERVICED SEPARATELY, HOUSING
3	D36264	1	FITTING,
4	86998332	1	FILTER, AIR, Secondary
5	86998333	1	FILTER, AIR, Primary
6	87414982	1	COVER, Inc. 7
7	87414805	1	GASKET,
8	86983468	1	VALVE, CHECK,
9	214-3264	1	CLAMP, HOSE, 3.25/4.125 HD Worm, W/liner,
10	279492A1	1	SWITCH, RESTRICTION, Air Restriction
11	87704721	1	TUBE, AIR INTAKE, Inc. 27 - 30
12	214-3280	1	CLAMP, HOSE, 4.25/5.125 HD Worm, W/liner,
13	214-32112	1	CLAMP, HOSE, 6.25/7.125 HD Worm, W/liner,
14	857-10050	4	BOLT, Hex Flg, M10 x 50, 10.9,
15	87547587	4	NUT,
16	87414123	2	SUPPORT,
17	214-3240	2	CLAMP, HOSE, 1.75/2.625 HD Worm, W/liner,
18	87656137	4	BOLT, Hex Flg, M8 x 20, 10.9, Full Thd,
19	87386774	1	TUBE, Standard Muffler
19	87302271	1	TUBE, Muffler With Spark Arrester
20	86507066	4	NUT, M8 x 1.25, Flg, Cl 10,
21	451775A1	1	DUCT,
22	87675531	6	BOLT,
23	87012918	1	CLAMP, HOSE, #188, 12.25/2.50 Type F Worm,
24	495-11028	6	WASHER, 1/4", SAE,
25	87301498	6	NUT,
26	87302039	1	SEAL, Air Inlet Duct
27	87704720	1	TUBE, AIR INTAKE, Turbo End
28	87341246	1	HOSE, PROTECTION, Air Intake Cleaner End
29	87735196	1	BOLT, T - Hose Clamp
30	87735195	1	BOLT, T - Hose Clamp

PDF created with pdfFactory trial version www.pdffactory.com

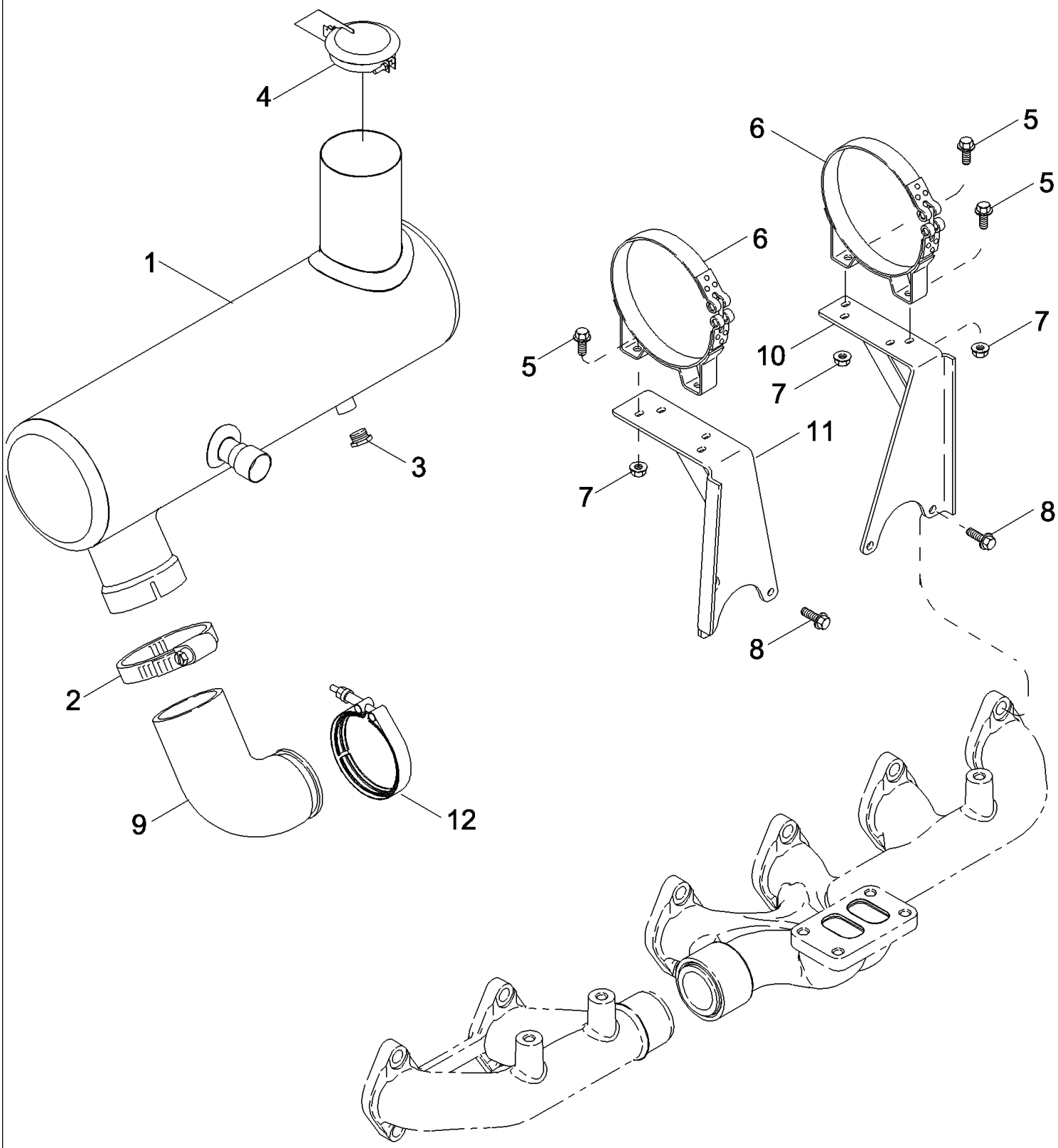

PDF created with pdfFactory trial version www.pdffactory.com

7088 AXIAL-FLOW COMBINE (EU) (4/08-)

02-13 EXHAUST SYSTEM - MUFFLER

ссылка	Номер детали	Кол-во	Описание
1	87301603	1	MUFFLER, Inc. 2
2	87314920	1	CLAMP,
3	217-409	1	PLUG, Hex Hd, 1/2"-14, Brass,
4	86997809	1	COVER, Muffler
5	409-7512	4	BOLT, Hex Flg, 5/16"-18 x 3/4", Serr,
6	87301605	2	CLAMP,
7	86507066	4	NUT, M8 x 1.25, Flg, Cl 10,
8	86705429	4	BOLT,
9	87301604	1	ELBOW, Engine Exhaust
10	87310387	1	BRACKET, Muffler
11	87311461	1	BRACKET, Muffler, Rear
12	A170807	1	CLAMP,

PDF created with pdfFactory trial version www.pdffactory.com

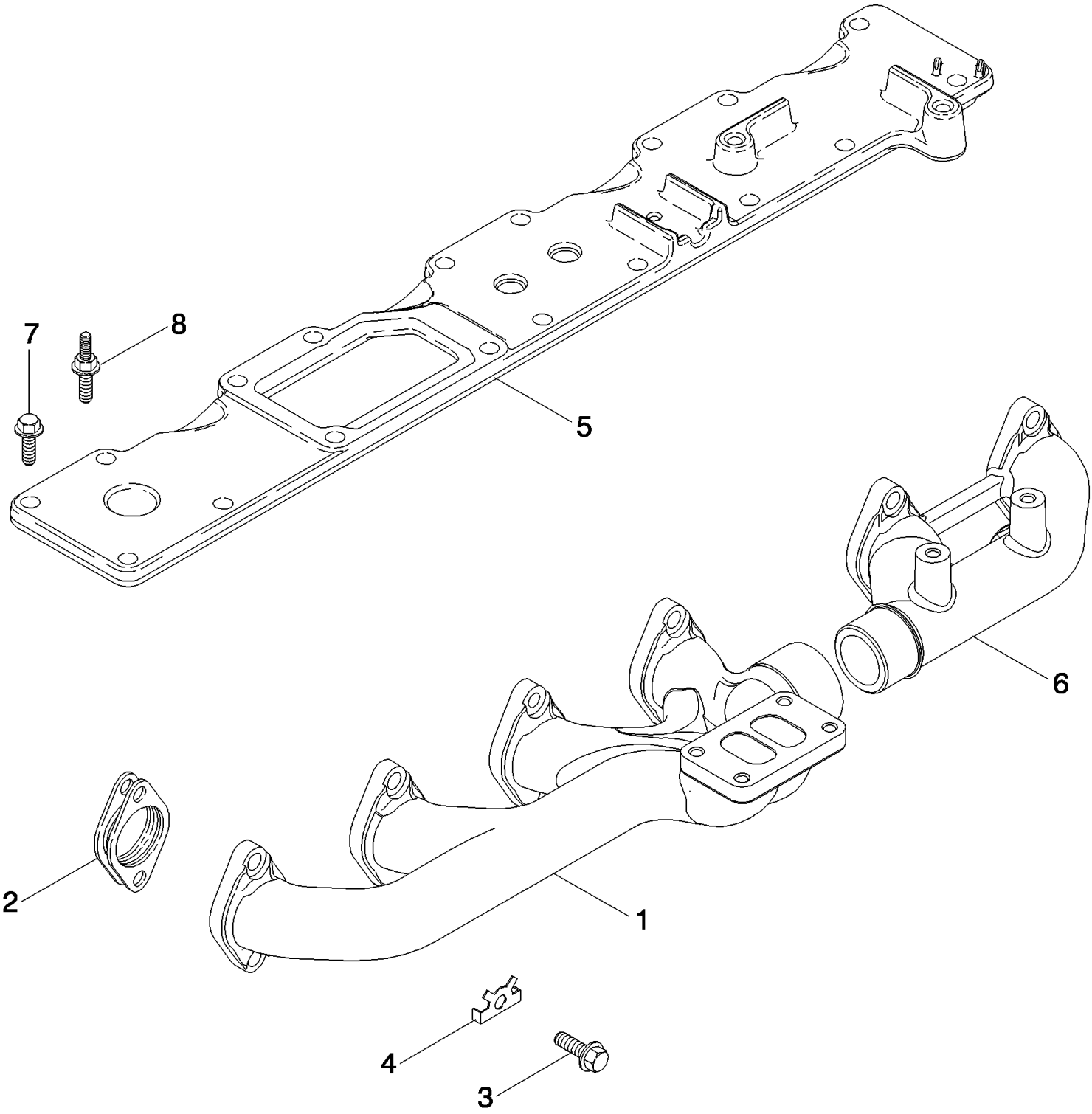

PDF created with pdfFactory trial version www.pdffactory.com

7088 AXIAL-FLOW COMBINE (EU) (4/08-)

02-14 MANIFOLDS

ссылка	Номер детали	Кол-во	Описание
1	87344862	1	MANIFOLD, EXHAUST,
2	J937479	6	GASKET, MANIFOLD,
3	J944593	12	BOLT, 10x70 mm
4	J945252	12	SPACER,
5	87340282	1	COVER, Intake
6	87344861	1	MANIFOLD, EXHAUST,
7	845-8030	13	BOLT, Hex Flg, M8 x 30, 8.8,
8	87340279	1	SCREW, M8 x 35

PDF created with pdfFactory trial version www.pdffactory.com

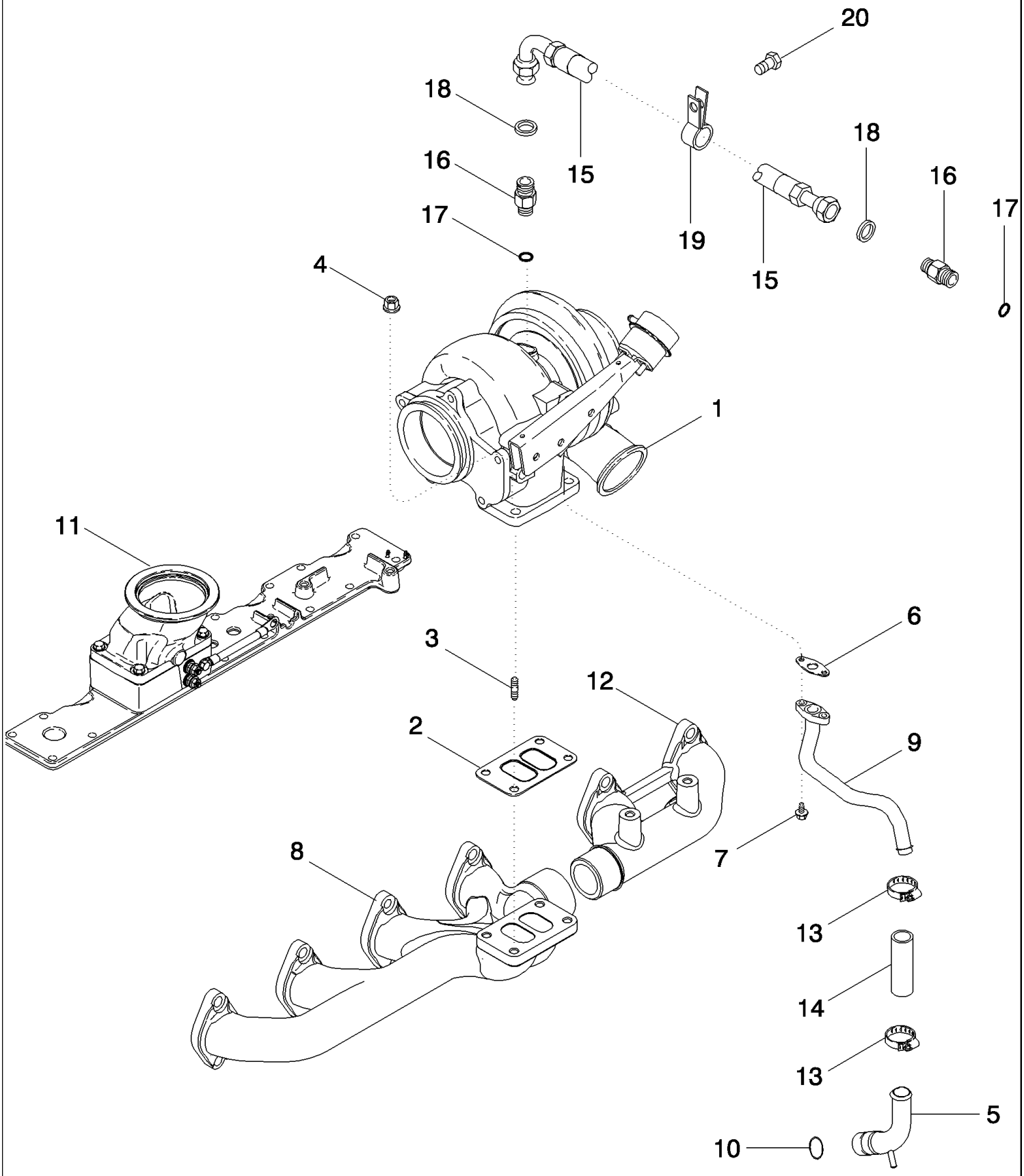

PDF created with pdfFactory trial version www.pdffactory.com

7088 AXIAL-FLOW COMBINE (EU) (4/08-)

02-15 TURBOCHARGER SYSTEM

ссылка	Номер детали	Кол-во	Описание
1	87736393	1	TURBOCHARGER, Kit, Inc. 2, 6, 7088, See Figure 02-16
1	87351239	1	KIT, Turbocharger, Inc. 2, 6, See Figure 02-16, 5088, 6088
2	J901356	1	GASKET, Turbo Mount
3	J818823	4	STUD, M10 x 1.5
4	J818824	4	NUT, M10
5	J945108	1	TUBE, Turbo Drain
6	J937706	1	GASKET, Oil Drain
7	845-8020	2	BOLT, Hex Flg, M8 x 20, 8.8, Full Thd,
8	87344862	1	MANIFOLD, EXHAUST,
9	86993028	1	TUBE, Turbo Drain at Turbo
10	238-7018	1	O-RING, -018, Cl 7, .739" ID x .070" Thk,
11	REF	1	INSTRUCTION, COVER, Intake
12	87344861	1	MANIFOLD, EXHAUST,
13	214-1512	2	CLAMP, HOSE, #12, .69/1.25 Type F Worm, W/liner,
14	J286499	1	HOSE, 76 mm (3"), Turbo Drain
15	87345099	1	HOSE, FLEXIBLE, 533 mm (21")
16	J922789	2	CONNECTOR, HYD., Male, Inc. 17, 18
17	J678603	1	O-RING, 9.3MM ID x 2.2 Thk,
18	313262A1	2	O-RING, .364" ID x .070" Thk,
19	87434675	1	CLAMP,
20	615-8012	1	BOLT, Hex, M8 x 12, 8.8, Full Thd,

PDF created with pdfFactory trial version www.pdffactory.com

02-16 TURBOCHARGER ASSEMBLY

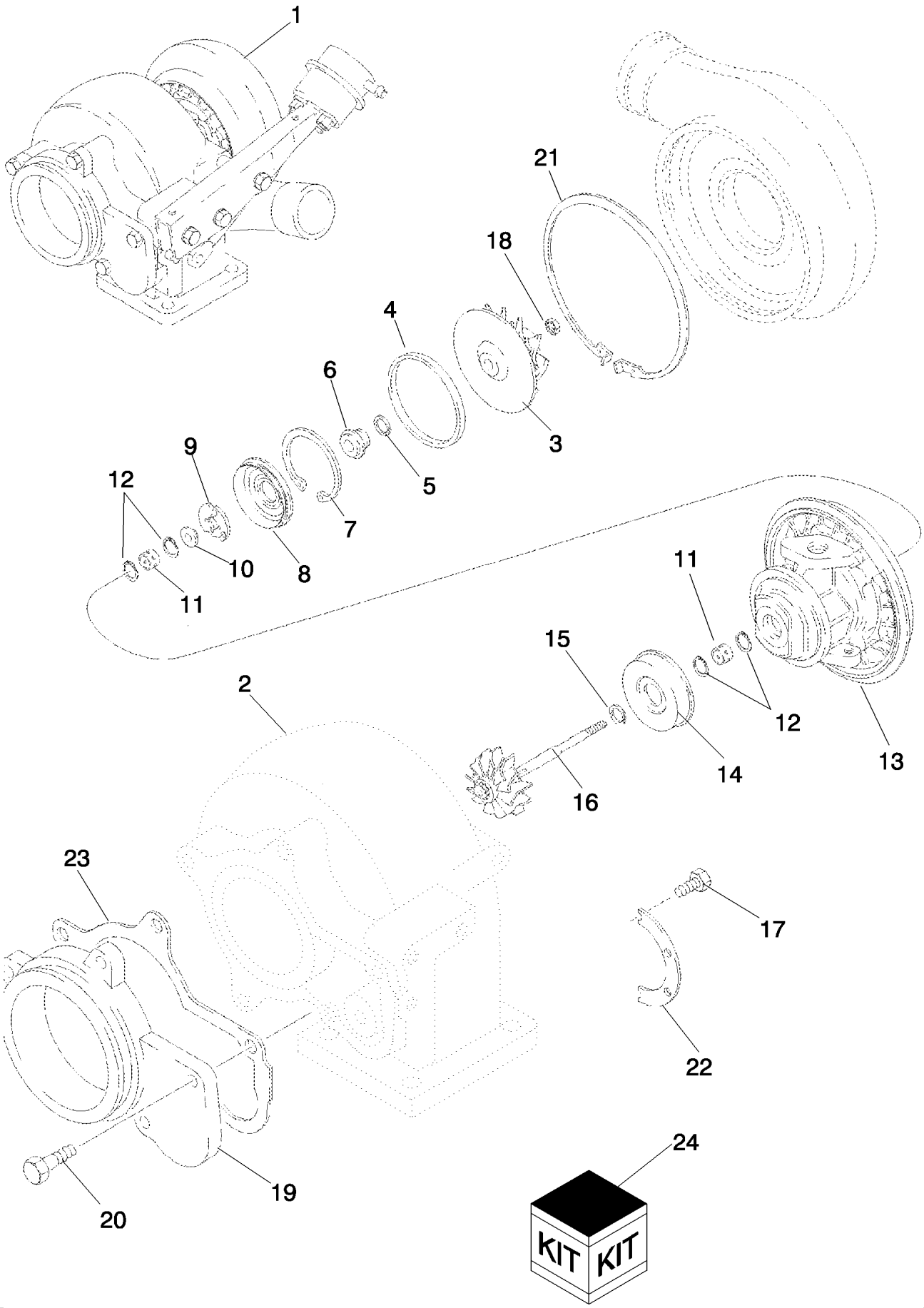

PDF created with pdfFactory trial version www.pdffactory.com

02-16 TURBOCHARGER ASSEMBLY

ссылка	Номер детали	Кол-во	Описание
1	NSS	1	NOT SERVICED SEPARATELY, TURBOCHARGER Inc. 2 - 24, See Figure 02-17
2	87701197	1	HOUSING, Inc. 3 - 18
3	NSS	1	NOT SERVICED SEPARATELY, IMPELLER
4	J528933	1	
5	J756754	1	
6	NSS	1	NOT SERVICED SEPARATELY, SLINGER
7	J527566	1	
8	J528104	1	
9	J532215	1	
10	J532217	1	RING, THRUST,
11	J503100	2	
12	J762259	4	
13	NSS	1	NOT SERVICED SEPARATELY, HOUSING
14	J519302	1	SHIELD,
15	J758848	1	
16	NSS	1	NOT SERVICED SEPARATELY, ROTOR and SHAFT
17	J759917	6	SET SCREW,
18	J590306	1	NUT, LOCK,
19	J537979	1	ADAPTER,
20	614-8020	5	BOLT, Hex, M8 x 20, 8.8,
21	J533163	1	RING, SNAP,
22	J534309	2	PLATE,
23	J537960	1	GASKET,
24	J575169	1	KIT, REPAIR, Overhaul

PDF created with pdfFactory trial version www.pdffactory.com

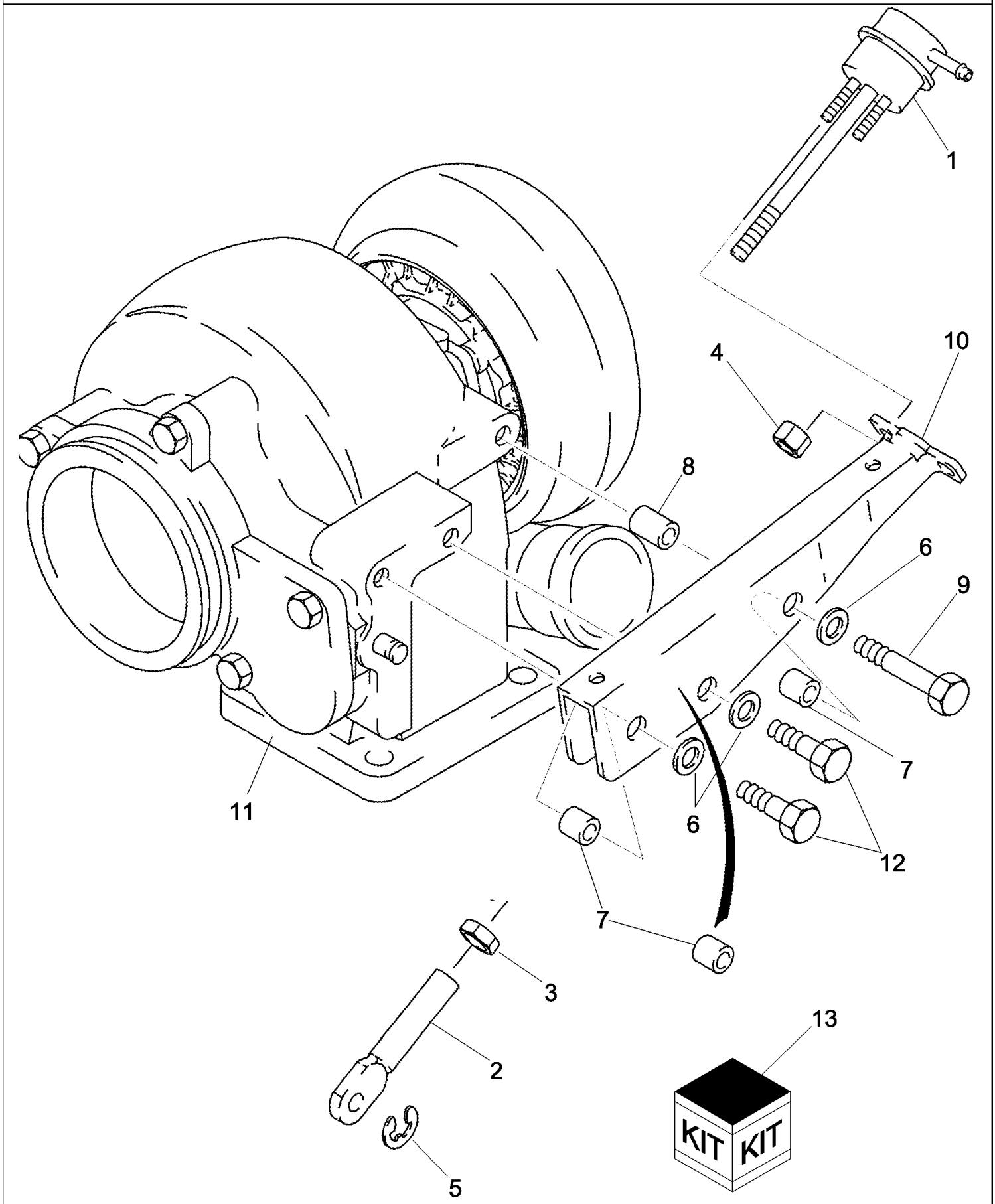

PDF created with pdfFactory trial version www.pdffactory.com

7088 AXIAL-FLOW COMBINE (EU) (4/08-)

02-17 WASTEGATE ACTUATOR

ссылка	Номер детали	Кол-во	Описание
1	87701097	1	KIT,
2	J528177	1	LINK,
3	425-155	1	NUT, Jam, 5/16"-24, G5,
4	J528204	2	NUT,
5	J528221	1	CIRCLIP,
6	895-11008	3	WASHER, M8 x 16 x 1.6,
7	J532195	3	SPACER, 13.6 mm
8	J532196	1	SPACER, 19 mm
9	814-8050	1	BOLT, Hex, M8 x 50, 8.8,
10	J533328	1	SUPPORT,
11	87701196	1	HOUSING,
12	814-8035	2	BOLT, Hex, M8 x 35, 8.8,
13	84181446	1	KIT, SERVICE, Wastegate Actuator

PDF created with pdfFactory trial version www.pdffactory.com

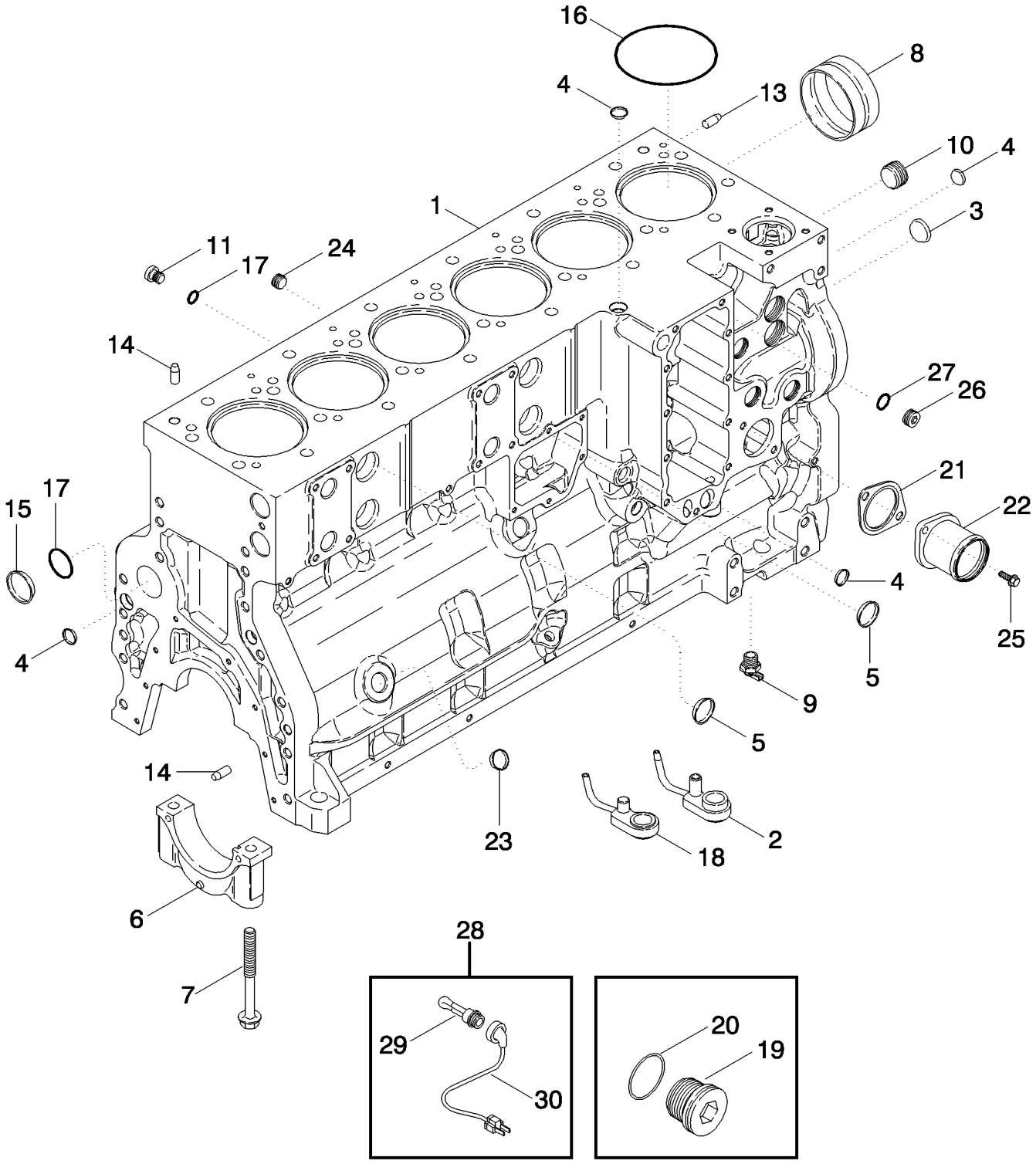

PDF created with pdfFactory trial version www.pdffactory.com

7088 AXIAL-FLOW COMBINE (EU) (4/08-)

02-18 CYLINDER BLOCK - ENGINE BLOCK HEATERS

ссылка	Номер детали	Кол-во	Описание
	87603080	1	ENGINE, BASIC, Service, Tier 3, Note: Basic engines and reman engines are generic engines, all parts are not supplied with the engines. Check the configuration of the engine being removed, with the configuration of the engine being installed. For any components not supplied with the engine being installed, reuse those parts from the engine that has just been removed. Do not return the old engine, until the unit is reassembled., 7088, See Note, Less, Starter, Alternator, Fan, Fan Belt, Air Cleaner, Muffler, Exhaust Manifold, Flywheel and Housing, Oil Fill and Dipstick, Fuel Injection Pump, Injector Lines, Front Pulley, Belt Tensioner, Turbocharger and Aftercooler
	87537667	1	ENGINE, BASIC, Service, Tier 3, See Note, Less, Starter, Alternator, Fan, Fan Belt, Air Cleaner, Muffler, Exhaust Manifold, Flywheel and Housing, Oil Fill and Dipstick, Fuel Injection Pump, Injector Lines, Front Pulley, Belt Tensioner, Turbocharger and Aftercooler, 5088, Note: Basic engines and reman engines are generic engines, all parts are not supplied with the engines. Check the configuration of the engine being removed, with the configuration of the engine being installed. For any components not supplied with the engine being installed, reuse those parts from the engine that has just been removed. Do not return the old engine, until the unit is reassembled.
	87351542	1	ENGINE, BASIC, Service, Tier 3, Note: Basic engines and reman engines are generic engines, all parts are not supplied with the engines. Check the configuration of the engine being removed, with the configuration of the engine being installed. For any components not supplied with the engine being installed, reuse those parts from the engine that has just been removed. Do not return the old engine, until the unit is reassembled., See Note, Less, Starter, Alternator, Fan, Fan Belt, Air Cleaner, Muffler, Exhaust Manifold, Flywheel and Housing, Oil Fill and Dipstick, Fuel Injection Pump, Injector Lines, Front Pulley, Belt Tensioner, Turbocharger and Aftercooler, 6088
	87544189	1	ENGINE, SHORT, , 7088
	87390942	1	ENGINE, SHORT, , 5088, 6088
1	84165305	1	CYLINDER BLOCK, Short, Inc. 2 - 8, Stripped Short Block, Pistons, Connecting Rods and Bearings, Crankshaft and Bearings
2	87739191	6	NOZZLE, , 7088
2	87673839	6	NOZZLE, , 5088, 6088
3	A77586	3	PLUG, 43 mm
4	A77506	4	PLUG, 21 mm
5	J905401	4	PLUG, 35 mm
6	87444056	7	CAP, Main Bearing
7	87444059	14	BOLT, M14 x 128
8	J945329	7	BEARING, CAMSHAFT,
	87338079	1	KIT, Inc. 9 - 20
9	217-103	2	COCK, DRAIN, 1/4 PT
10	86625135	1	PLUG, Hex Soc, 1"-11 1/2 NPTF,
11	J678923	6	PLUG, 10 mm, Inc. 12
12	637-72081	1	O-RING, Cl 7, 8.1MM ID x 1.6 Thk,

PDF created with pdfFactory trial version www.pdffactory.com

7088 AXIAL-FLOW COMBINE (EU) (4/08-)

02-18 CYLINDER BLOCK - ENGINE BLOCK HEATERS

ссылка	Номер детали	Кол-во	Описание
13	J900257	4	PIN, 16 mm
14	J901846	8	PIN,
15	41-3044	2	PLUG, Exp, 2 3/4",
16	J907177	6	O-RING,
17	J926048	2	O-RING, 66 mm ID
18	87739191	6	NOZZLE,
19	J678921	1	PLUG, 14 mm, Inc. 20
20	J678912	1	O-RING, 11.3MM ID x 2.2 Thk,
21	J945603	1	GASKET, Water Inlet
22	J913030	1	FITTING, Water Inlet
23	A77530	4	PLUG, 1-13/64 OD
24	217-438	7	PLUG, Hex Soc, 1/2"-14,
25	845-8020	2	BOLT, Hex Flg, M8 x 20, 8.8, Full Thd,
26	313244A1	2	PLUG, Hex Socket, 22 mm, Inc. 27
27	313246A1	1	O-RING, 19 ID x 2.2 mm
28	310493A1	1	KIT, Engine Block Heater, 120 Volt, Inc. 36 - 37
29	87105748	1	CABLE, ELECTRIC, 1829 mm (72")
30	NSS	1	NOT SERVICED SEPARATELY, ELEMENT
	310494A1	1	KIT, Coolant Heater, 240V, Inc. 36 - 37
29	J913112	1	HARNESS, WIRE, 305 mm (12")
30	NSS	1	NOT SERVICED SEPARATELY, ELEMENT
31	J900956	3	PLUG, (Not Shown)
32	87338185	1	BOLT, (Not Shown)
33	87337018	6	BOLT, (Not Shown)
34	J678923	6	PLUG, (Not Shown)
35	637-72081	1	O-RING, Cl 7, 8.1MM ID x 1.6 Thk, (Not shown)
36	J678921	1	PLUG, (Not Shown)
37	J678912	1	O-RING, 11.3MM ID x 2.2 Thk, (Not Shown)
38	J909025	6	SCREW, M8 x 1.25 x 55 (Not Shown)
39	87708865	1	PLUG, 42 mm (Not Shown), 7088
40	217-441	5	PLUG, Hex Soc, 3/4"-14 NPTF, (Not Shown)
41	87428566	1	FITTING, PIPE, (Not Shown)

PDF created with pdfFactory trial version www.pdffactory.com

02-19 OIL PUMP, PAN - OIL PAN HEATER KIT

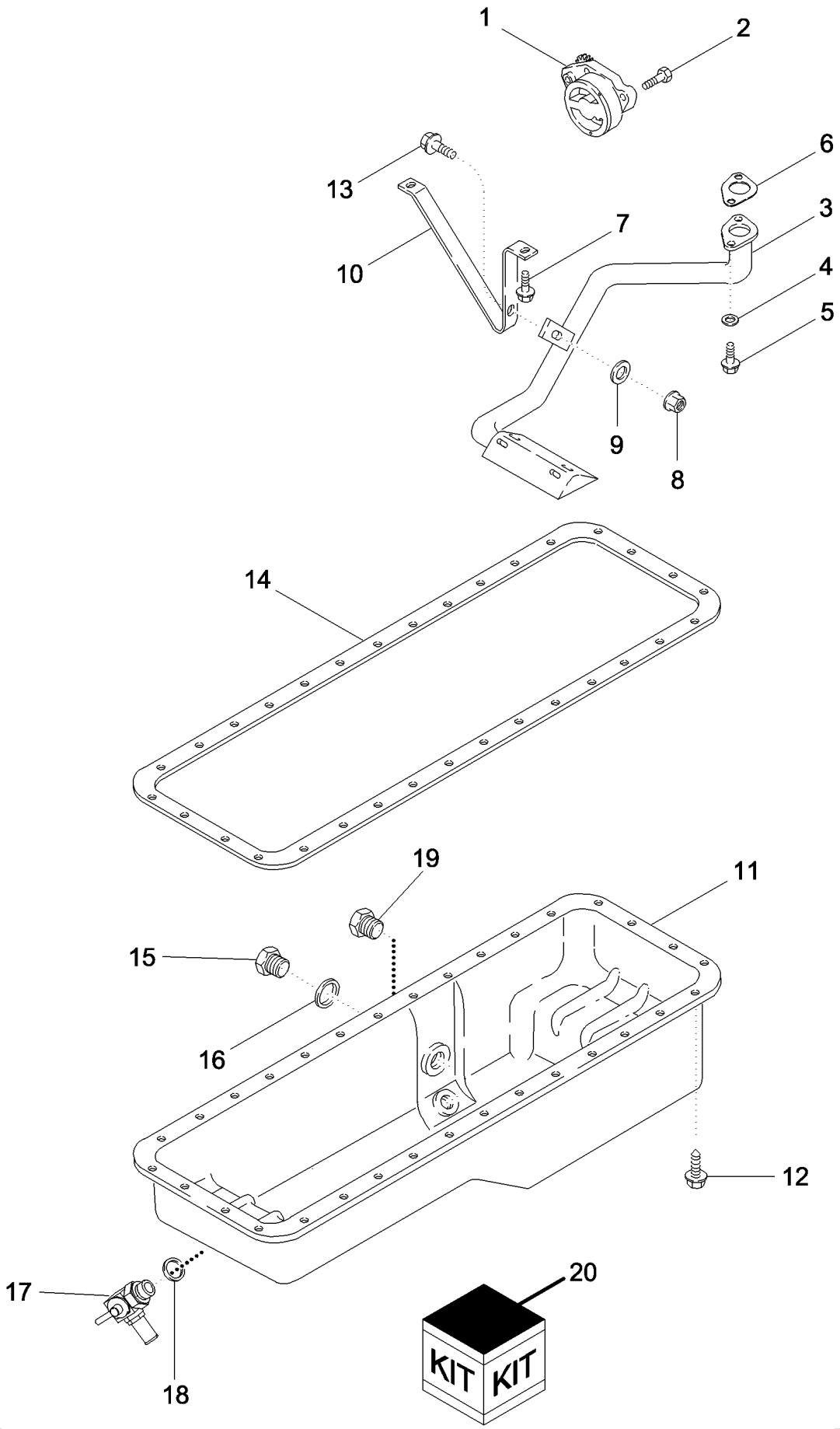

PDF created with pdfFactory trial version www.pdffactory.com

7088 AXIAL-FLOW COMBINE (EU) (4/08-)

02-19 OIL PUMP, PAN - OIL PAN HEATER KIT

ссылка	Номер детали	Кол-во	Описание
1	JR991123	1	REMAN-PUMP, ENGINE OIL,
1	JC991123	1	CORE-PUMP, ENGINE OIL,
1	J991123	1	PUMP, ENGINE OIL,
2	J900677	4	BOLT, M8 x 30
3	87357465	1	TUBE ASSY., , 7088
3	J921719	1	TUBE, , 5088, 6088
4	J926865	2	SPACER,
5	845-6030	2	BOLT, Hex Flg, M6 x 30, 8.8,
6	87447959	1	GASKET,
7	845-6015	2	BOLT, Hex Flg, M6 x 15, 8.8, Full Thd,
8	825-2406	1	NUT, M6 x 1, Flg, Cl 8,
9	J910960	1	WASHER,
10	J927611	1	BRACKET,
11	87357469	1	PAN, ENGINE OIL, , 7088
11	87351053	1	PAN, ENGINE OIL, , 5088, 6088
12	J907860	32	BOLT, Hex, Flg Hd, M8 x 25, Spcl, M8 x 21
13	845-6020	1	BOLT, Hex Flg, M6 x 20, 8.8, Full Thd,
14	87308050	1	GASKET, Pan
15	J924148	1	PLUG, M22
16	J902425	1	WASHER,
17	87367990	1	VALVE, SHUT-OFF,
18	J920773	1	WASHER, SEALING,
19	217-478	1	PLUG, DRAIN, Sq Soc, 1 1/4"-11 1/2, NTPF,
20	A77666	1	KIT, SERVICE, Engine Oil Heater, 240V/300W, 5088, 6088

PDF created with pdfFactory trial version www.pdffactory.com

02-20 CYLINDER HEAD AND COVER

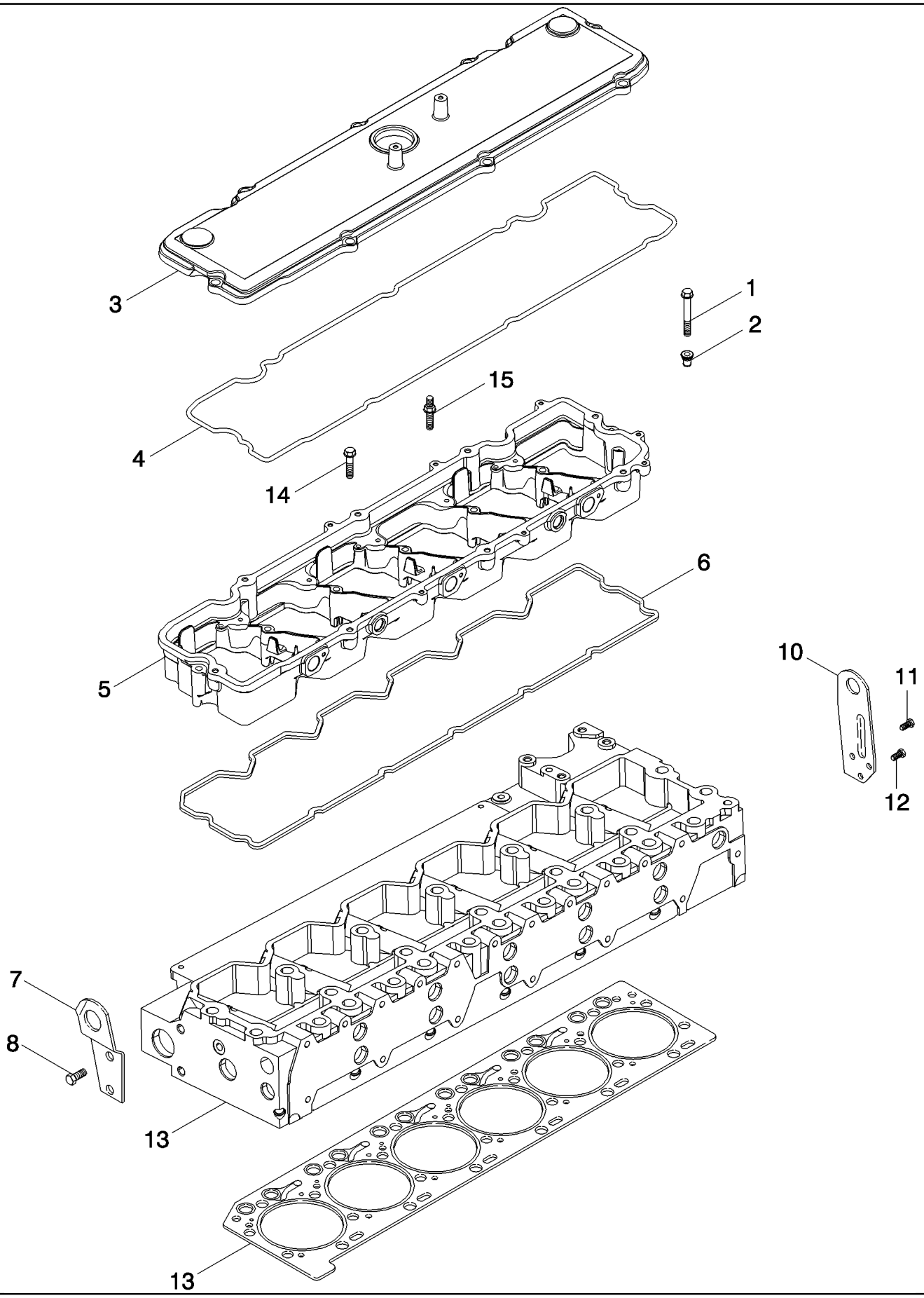

PDF created with pdfFactory trial version www.pdffactory.com

7088 AXIAL-FLOW COMBINE (EU) (4/08-)

02-20 CYLINDER HEAD AND COVER

ссылка	Номер детали	Кол-во	Описание
1	J900632	7	BOLT, Hex Flg, M8 x 35, 8.8,
2	87342136	8	ISOLATOR,
3	87345871	1	COVER, VALVE,
4	87345861	1	GASKET,
5	87344767	1	HOUSING, Rocker
6	87344755	1	GASKET, Rocker Lever Housing
7	87564629	1	Lift, Front
8	854-12025	2	BOLT, Hex Flg, M12 x 25, 10.9,
9	87737237	1	GASKET, CYLINDER HEAD, Standard
10	87340301	1	BRACKET, Lift, Rear
11	854-10020	2	BOLT, Hex Flg, M10 x 20, 10.9,
12	87340324	1	BOLT,
13	87653057	1	HEAD ASSY., With Valves, 6088, 7088, See Figure 02-22
13	87673421	1	HEAD ASSY., With Valves, See Figure 02-22, 5088
14	845-8075	7	BOLT, Hex Flg, M8 x 75, 8.8,
15	87340279	1	SCREW,

PDF created with pdfFactory trial version www.pdffactory.com

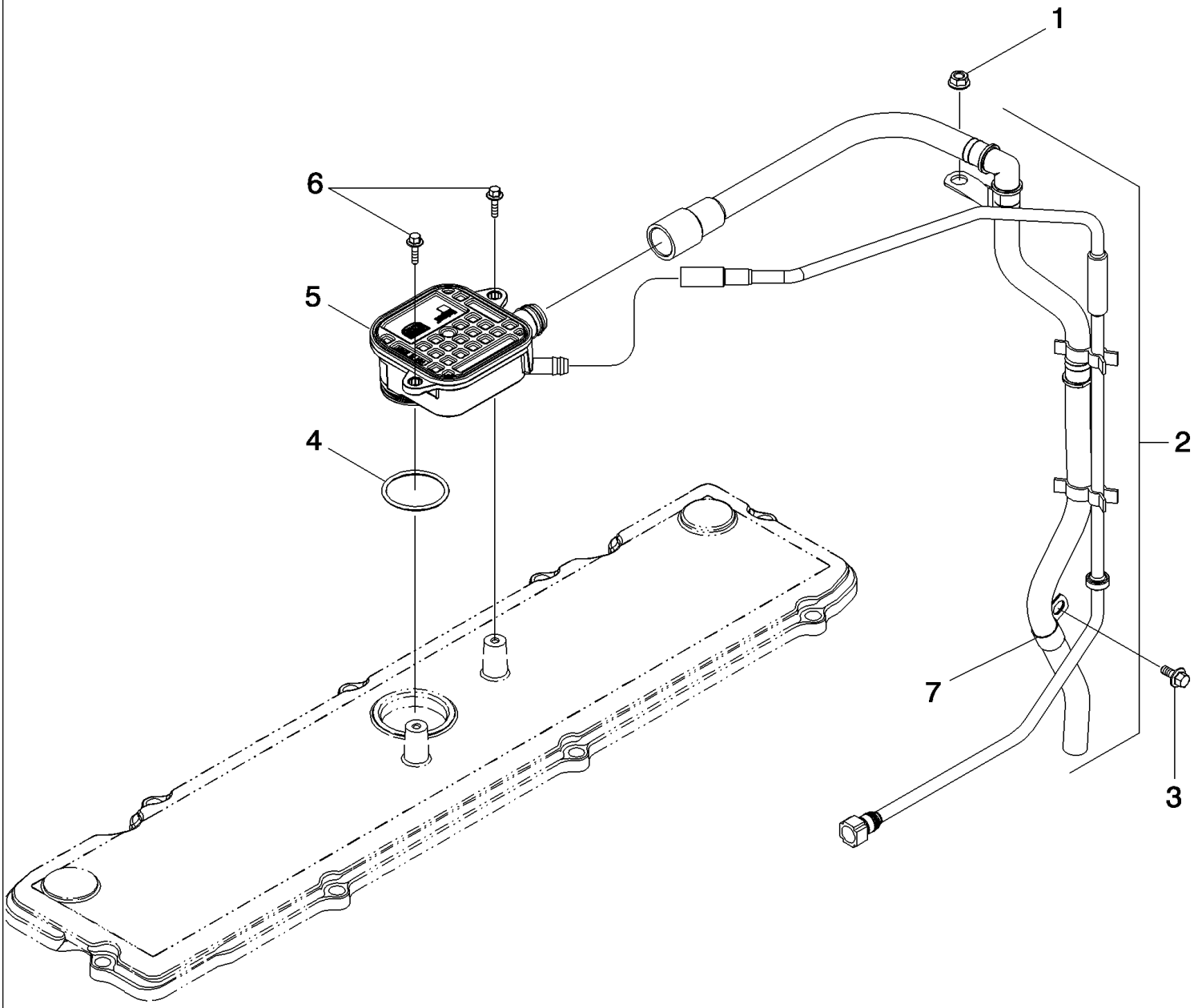

PDF created with pdfFactory trial version www.pdffactory.com

7088 AXIAL-FLOW COMBINE (EU) (4/08-)

02-21 CRANKCASE, BREATHER

ссылка	Номер детали	Кол-во	Описание
1	J900589	1	NUT, M8 x 1.25
2	87397336	1	TUBE ASSY., Lub Oil Drain
3	845-8016	1	BOLT, Hex Flg, M8 x 16, 8.8, Full Thd,
4	87338651	1	O-RING,
5	87539445	1	BREATHER,
6	844-6020	2	BOLT, Hex Flg, M6 x 20, 8.8,
7	515-24190	1	CLAMP, 3/4", Insul, 7/16" Bolt,

PDF created with pdfFactory trial version www.pdffactory.com

02-22 CYLINDER HEAD - VALVE MECHANISM

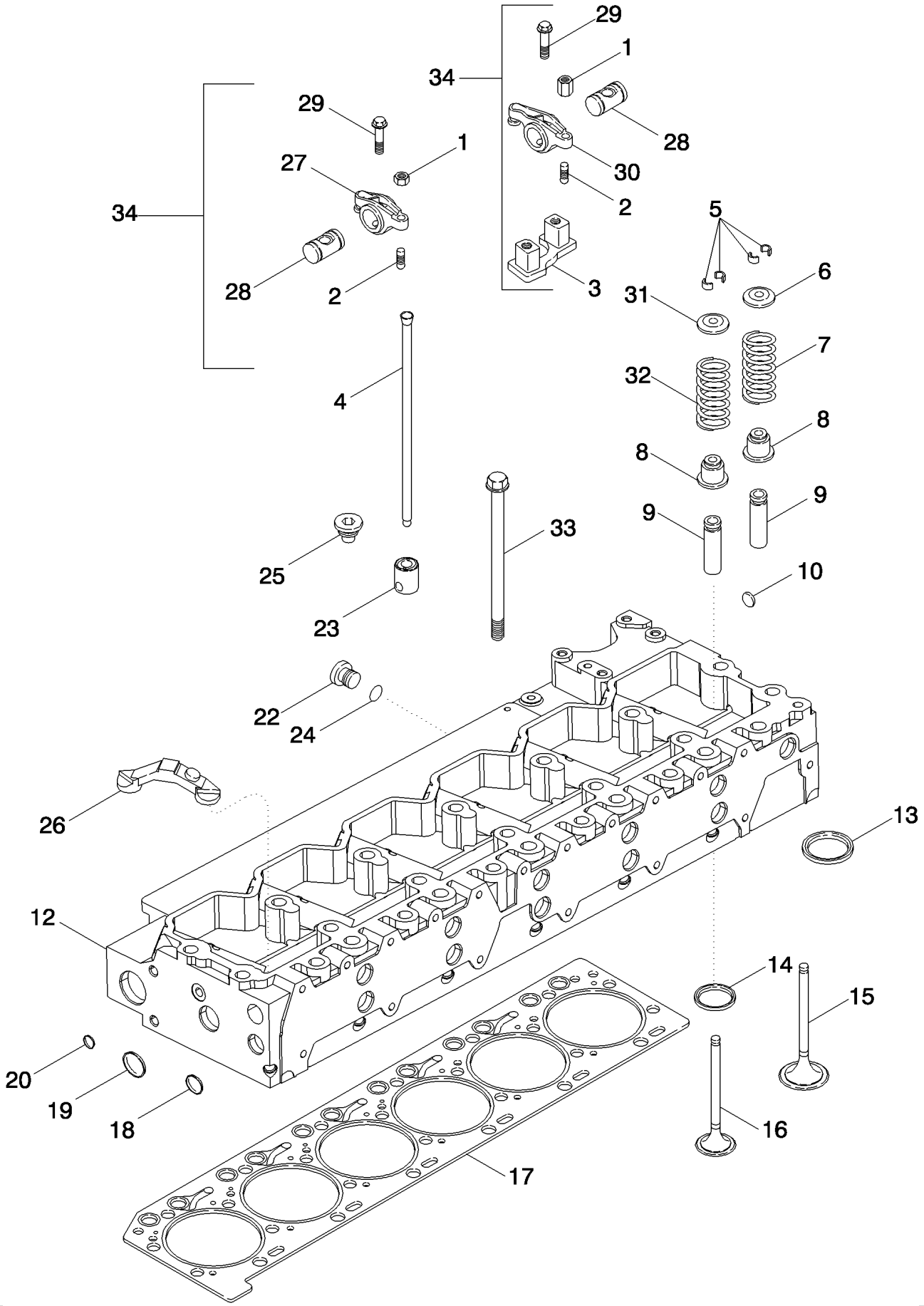

PDF created with pdfFactory trial version www.pdffactory.com

7088 AXIAL-FLOW COMBINE (EU) (4/08-)

02-22 CYLINDER HEAD - VALVE MECHANISM

ссылка	Номер детали	Кол-во	Описание
1	A77902	1	NUT, 3/8 - 24 NF
2	87436016	1	SCREW,
3	J941140	6	SUPPORT,
4	87435955	12	ROD, PUSH,
5	J900250	48	SCREW, Collet
6	87351062	12	VALVE, Rotator, 6088, 7088
7	87666321	12	SPRING, VALVE,
8	87352235	24	SEAL,
9	NSS	24	NOT SERVICED SEPARATELY, GUIDE, Valve
10	J945093	1	PLUG,
11	87666392	6	PLUG,
12	NSS	1	NOT SERVICED SEPARATELY, HEAD ASSY., Stripped
13	J940152	12	INSERT, Intake
14	87344002	12	INSERT, Exhaust
15	87343688	12	VALVE, ENGINE, INLET, STD, , 6088, 7088
15	J942588	12	VALVE, ENGINE, INLET, STD, , 5088
16	87343693	12	VALVE, ENG EXHAUST, STD, , 6088, 7088
16	J942589	12	VALVE, ENG EXHAUST, STD, , 5088
17	87737237	1	GASKET, CYLINDER HEAD,
18	A77590	2	PLUG,
19	87344118	2	PLUG, Expansion
20	87344108	1	PLUG,
21	J920706	18	PLUG,
22	J678923	1	PLUG, 10 mm, Inc. 24
23	87435851	12	TAPPET,
24	637-72081	1	O-RING, Cl 7, 8.1MM ID x 1.6 Thk,
25	87644763	12	GUIDE,
26	J943445	12	CROSSBAR,
27	87435953	6	ROCKER ARM, Intake
28	87435951	6	SHAFT,
29	J943933	2	SCREW,
30	87435952	1	ROCKER ARM, Exhaust
31	J944452	12	RETAINER,
32	87666324	12	SPRING, VALVE, , 6088, 7088
33	87344126	26	BOLT, M14 x 160
34	87344813	6	VALVE, Rocker, Inc. 1,2 3, 27 - 30

PDF created with pdfFactory trial version www.pdffactory.com

02-23 FRONT GEAR COVER

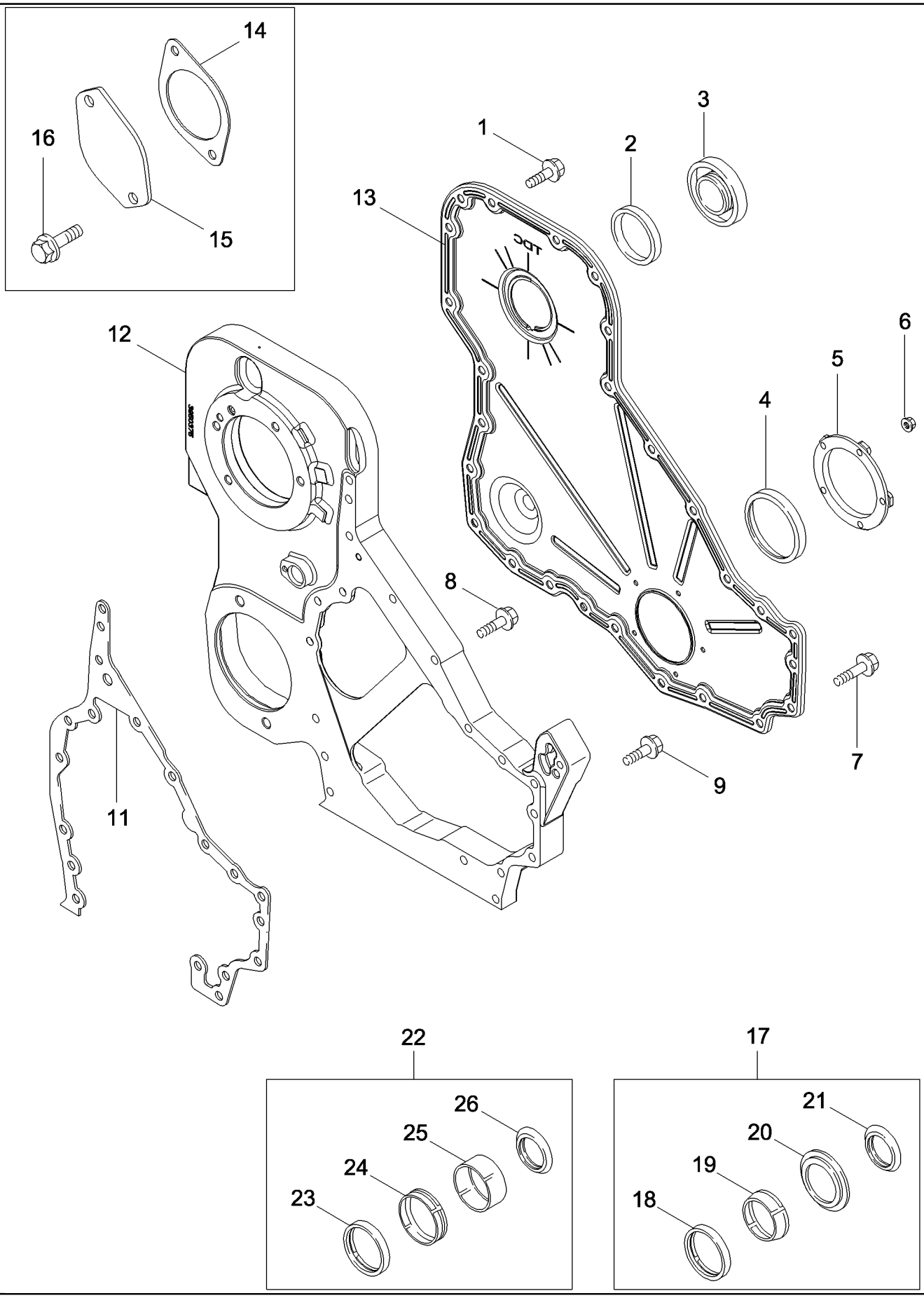

PDF created with pdfFactory trial version www.pdffactory.com

7088 AXIAL-FLOW COMBINE (EU) (4/08-)

02-23 FRONT GEAR COVER

ссылка	Номер детали	Кол-во	Описание
1	845-8016	16	BOLT, Hex Flg, M8 x 16, 8.8, Full Thd,
2	J903475	1	SEAL,
3	J903463	1	COVER,
4	NSS	1	NOT SERVICED SEPARATELY, SEAL, Order A77790 or A77808
5	J941786	1	CARRIER,
6	87493304	5	NUT, M6
7	J926863	11	BOLT, M8 x 50
8	J943885	3	BOLT, M8 x 40
9	J926846	3	BOLT, M8 x 20
10	217-441	1	PLUG, Hex Soc, 3/4"-14 NPTF, (Not Shown)
11	J944293	1	GASKET,
12	NSS	1	NOT SERVICED SEPARATELY, HOUSING, Gear
13	87350310	1	COVER,
14	J940245	1	GASKET,
15	J940246	1	COVER, Accessory Drive
16	854-12025	2	BOLT, Hex Flg, M12 x 25, 10.9,
17	A77790	1	KIT, SEALS, Crankshaft, Front, Inc. 18 - 21
18	NSS	1	NOT SERVICED SEPARATELY, SEAL
19	NSS	1	NOT SERVICED SEPARATELY, TOOL
20	NSS	1	NOT SERVICED SEPARATELY, TOOL
21	J918113	1	SHIELD,
22	A77808	1	KIT, SERVICE, Crankshaft, Front, Inc. 23 - 26
23	NSS	1	NOT SERVICED SEPARATELY, SEAL, Oil, Oversized
24	NSS	1	NOT SERVICED SEPARATELY, SLEEVE
25	NSS	1	NOT SERVICED SEPARATELY, TOOL
26	J924987	1	SHIELD,
27	J920706	1	PLUG, (Not Shown)
28	217-438	2	PLUG, Hex Soc, 1/2"-14, (Not Shown)

PDF created with pdfFactory trial version www.pdffactory.com

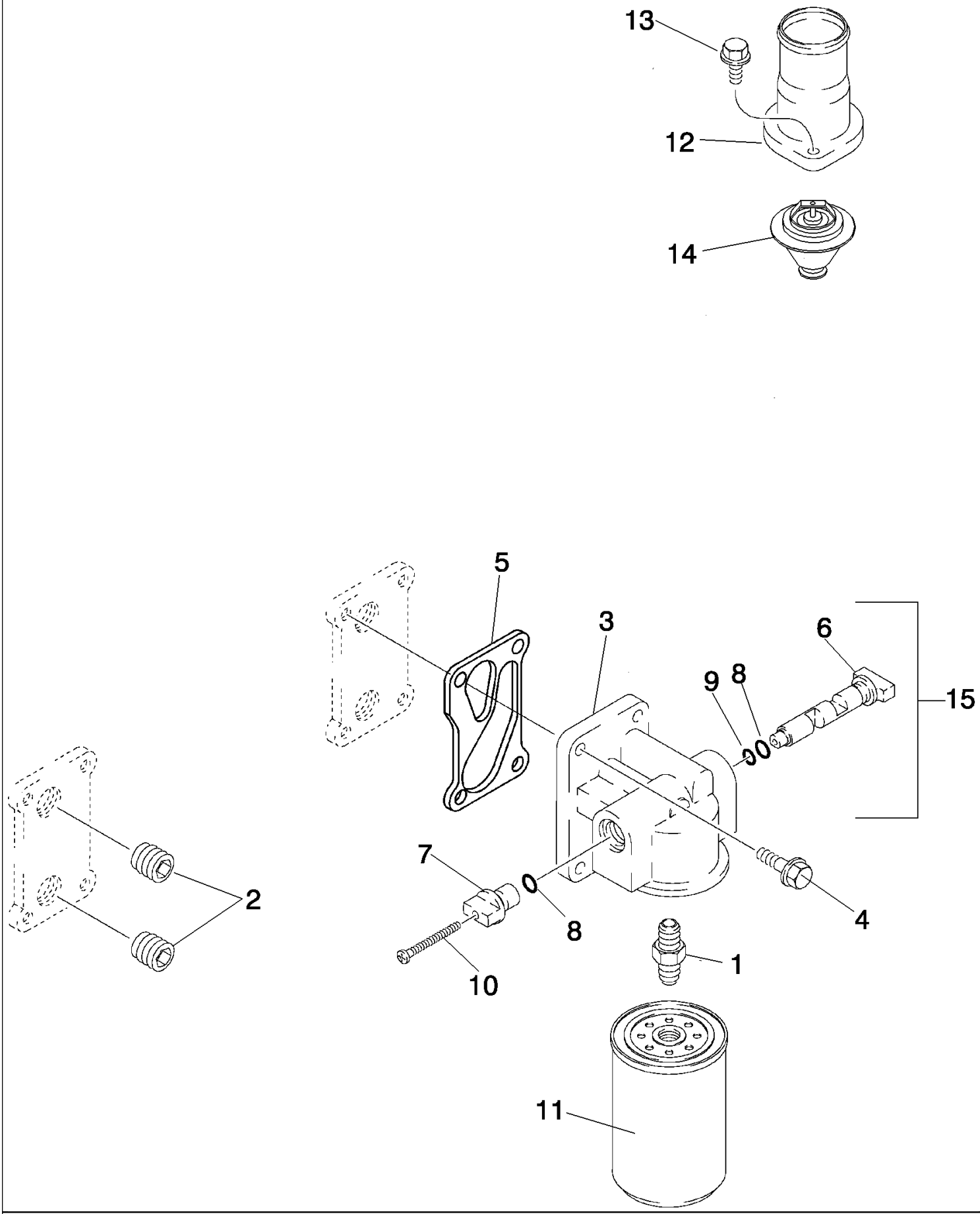

PDF created with pdfFactory trial version www.pdffactory.com

7088 AXIAL-FLOW COMBINE (EU) (4/08-)

02-24 FILTER, COOLANT/CONDTIONER AND THERMOSTAT

ссылка	Номер детали	Кол-во	Описание
1	A77623	1	ADAPTER,
2	263136	2	PLUG, MAGNETIC, Sq. Soc, 3/4"-14 NPTF,
3	J943738	1	HEAD, FILTER,
4	845-8025	4	BOLT, Hex Flg, M8 x 25, 8.8,
5	87612306	1	GASKET,
6	J943739	1	VALVE, SHUT-OFF,
7	J943740	1	VALVE, SHUT-OFF,
8	87423041	2	O-RING,
9	238-5013	1	O-RING, -013, 70 Duro, .426" ID x .070" Thk,
10	J944454	1	SCREW,
11	J100304	1	FILTER, ELEMENT,
12	J944429	1	OUTLET,
13	845-8025	2	BOLT, Hex Flg, M8 x 25, 8.8,
14	87698668	1	THERMOSTAT,
15	J945110	1	Coolant Filter, Inc. 3, 6 - 10

PDF created with pdfFactory trial version www.pdffactory.com

02-25 OIL FILTER AND COOLER

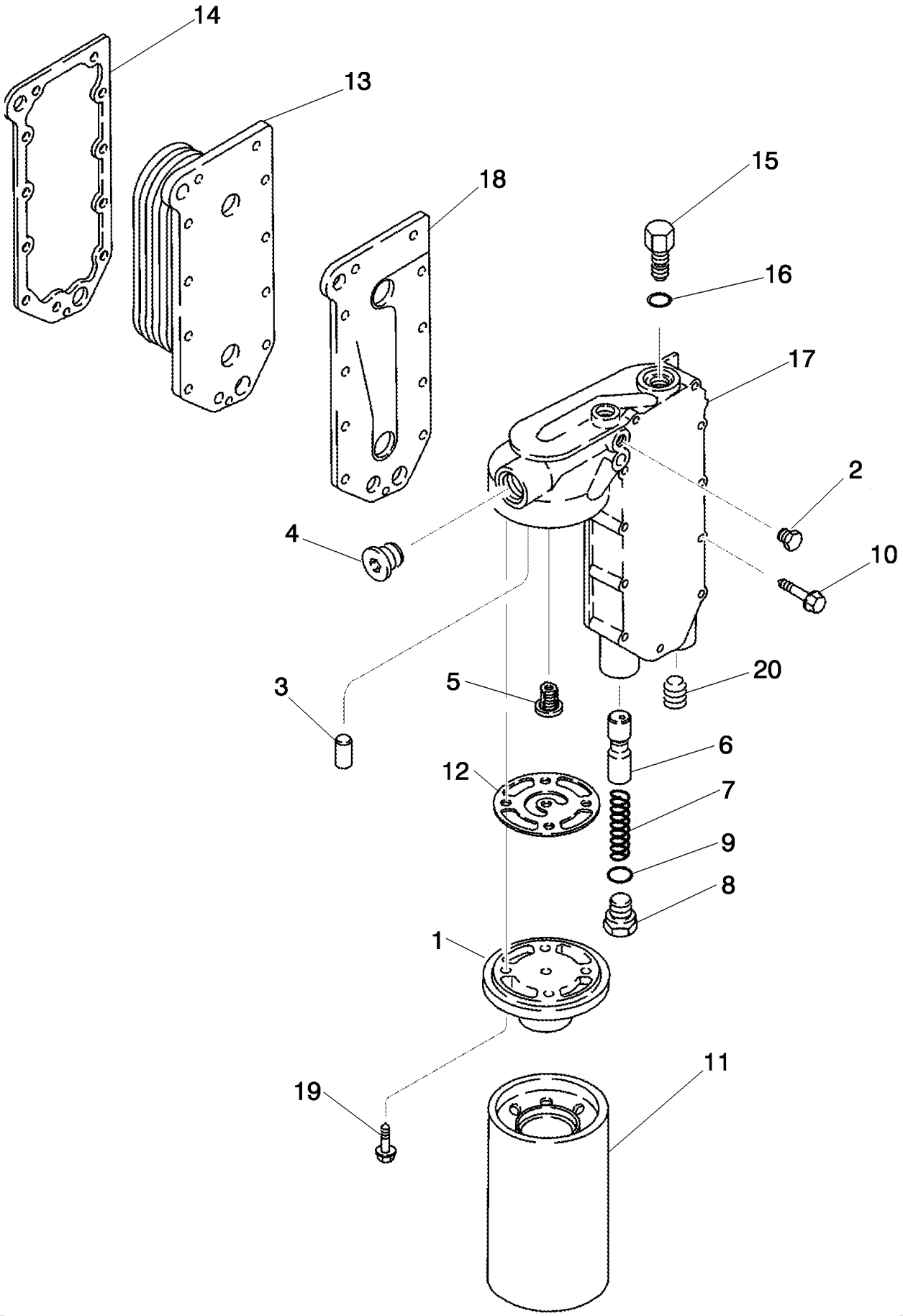

PDF created with pdfFactory trial version www.pdffactory.com

7088 AXIAL-FLOW COMBINE (EU) (4/08-)

02-25 OIL FILTER AND COOLER

ссылка	Номер детали	Кол-во	Описание
1	87340627	1	HEAD, FILTER,
2	J906619	2	PLUG, 1/8 PT
3	A77722	1	PIN,
4	217-441	1	PLUG, Hex Soc, 3/4"-14 NPTF,
5	J936365	1	VALVE, PRESSURE RELIEF,
6	J945967	1	PLUNGER,
7	87340755	1	SPRING,
8	J931084	1	PLUG, 24 mm, Inc. 9
9	J930911	1	O-RING, 3/4 ID x 1/16
10	87421315	8	SCREW, M8 x 65; 10.9
10	87409553	1	BOLT, With Stud, M8
11	366700A1	1	FILTER, ENGINE OIL,
12	87447957	1	GASKET,
13	87452245	1	CORE-OIL COOLER,
14	J918174	1	GASKET,
15	J934410	1	VALVE, BY-PASS, Inc. 16
16	A77724	1	O-RING,
17	87314031	1	COVER,
18	J929011	1	GASKET,
19	J907860	4	BOLT, Hex, Flg Hd, M8 x 25, Spcl,
20	217-466	1	PLUG, DRAIN, Sq Soc, 1/2"-14, NTPF,

PDF created with pdfFactory trial version www.pdffactory.com

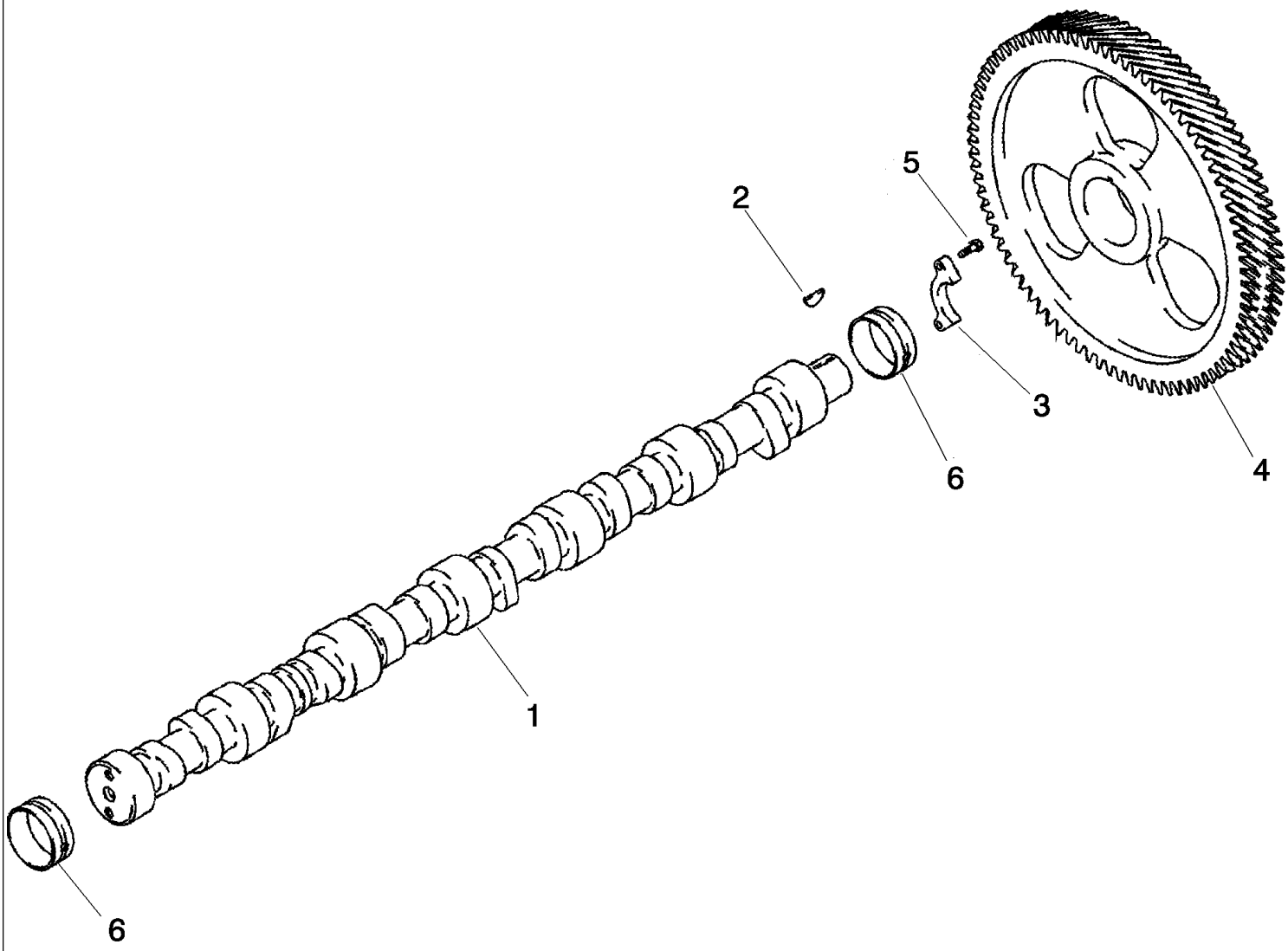

PDF created with pdfFactory trial version www.pdffactory.com

7088 AXIAL-FLOW COMBINE (EU) (4/08-)

02-26 CAMSHAFT

ссылка	Номер детали	Кол-во	Описание
1	87342996	1	CAMSHAFT, Inc. 2
2	87453128	1	PIN,
3	J944001	1	SUPPORT,
4	87342988	1	GEAR,
5	J900227	2	SCREW, Hex, M8 x 1.25 x 22,
6	J945329	7	BEARING, CAMSHAFT,

PDF created with pdfFactory trial version www.pdffactory.com

02-27 CRANKSHAFT

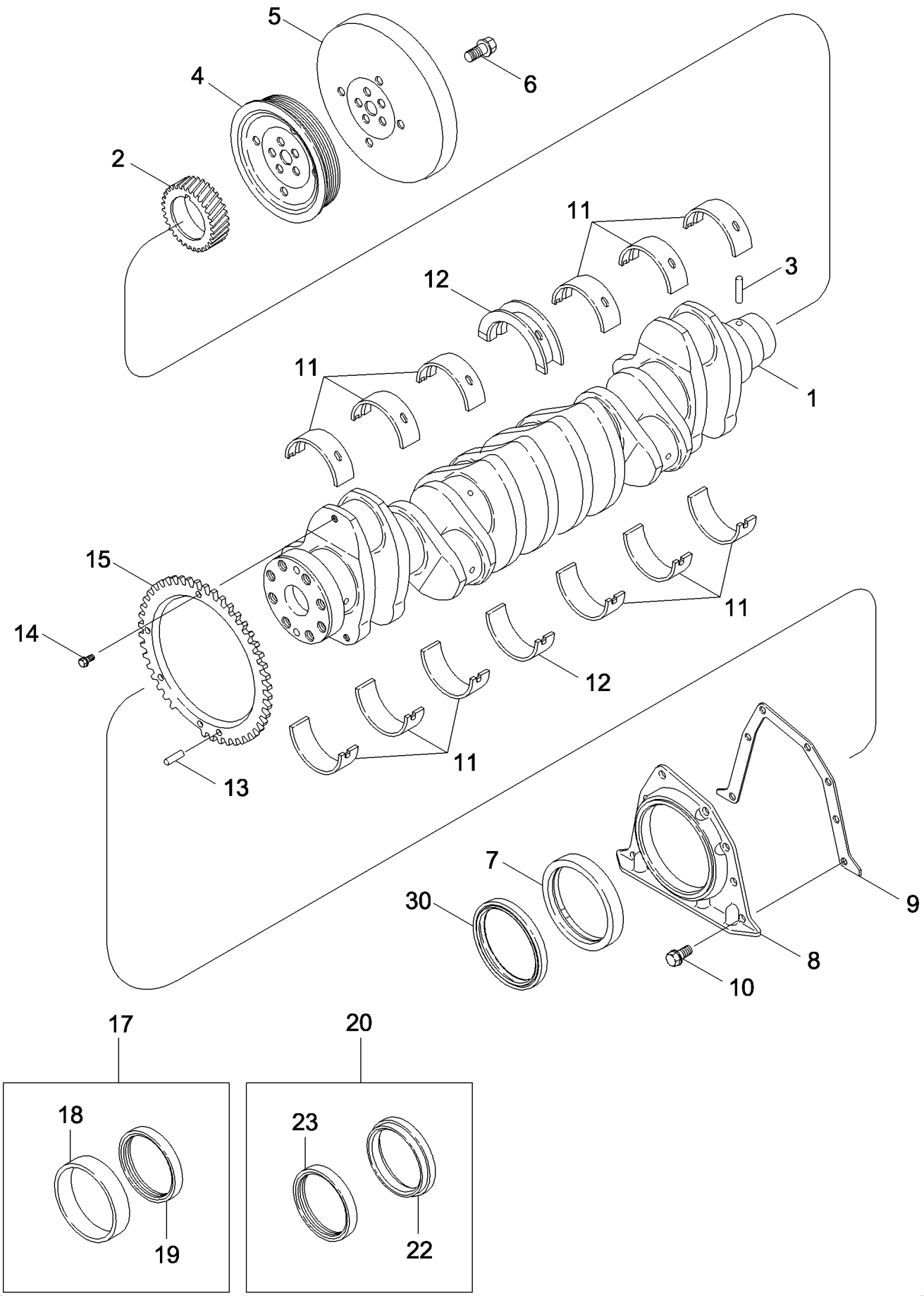

PDF created with pdfFactory trial version www.pdffactory.com

7088 AXIAL-FLOW COMBINE (EU) (4/08-)

02-27 CRANKSHAFT

ссылка	Номер детали	Кол-во	Описание
1	87356216	1	REMAN-CRANKSHAFT, , 7088
1	87356217	1	CORE-CRANKSHAFT, , 7088
1	87356215	1	CRANKSHAFT, , 7088
1	87335716	1	CRANKSHAFT, , 5088, 6088
2	J918776	1	GEAR,
3	J904483	1	PIN,
4	87422144	1	PULLEY, Crankshaft, 7088
5	87357611	1	DAMPER, , 7088
5	J925570	1	DAMPER, , 5088
5	87349482	1	DAMPER, , 6088
6	J914118	5	SCREW, M14 x 35, 7088
6	J906733	4	BOLT, , 5088
6	J914118	4	SCREW, , 6088
7	NSS	1	NOT SERVICED SEPARATELY, SEAL, Order J934486, REF 24
8	J933384	1	COVER, REAR, Oil Seal
9	J914301	1	GASKET,
10	87409160	8	SCREW, M6 x 16; 10,9
11	J945930	6	BEARING, CRANKSHAFT, Main, Standard
11	J945931	6	BEARING, CRANKSHAFT, Main, Undersize 0.25 mm
11	J945932	6	BEARING, CRANKSHAFT, Main, Undersize 0.50 mm
11	J945933	6	BEARING, CRANKSHAFT, Main, Undersize 0.75 mm
11	J945934	6	BEARING, CRANKSHAFT, Main, Undersize 1.00 mm
12	J945929	1	BEARING, CRANKSHAFT, Thrust, Standard
12	J945922	1	BEARING, CRANKSHAFT, Thrust, Undersize 0.25 mm
12	J945923	1	BEARING, CRANKSHAFT, Thrust, Undersize 0.50 mm
12	J945924	1	BEARING, CRANKSHAFT, Thrust, Undersize 0.75 mm
12	J945925	1	BEARING, CRANKSHAFT, Thrust, Undersize 1.00 mm
12	J945926	1	BEARING, CRANKSHAFT, Thrust, Standard, Oversize 0.25 mm
12	J945927	1	BEARING, CRANKSHAFT, Thrust, Standard, Oversize 0.50 mm
12	J945928	1	BEARING, CRANKSHAFT, Thrust, Undersize 0.50 mm, Oversize 0.50 mm
13	J329899	1	DOWEL,
14	87335729	4	BOLT, M6 x 1 x 12
15	87335719	1	RING, Speed Indicator
16	87434865	1	SEAL, Dust
17	A77810	1	KIT, SERVICE, Crankshaft, Rear, Inc. 18, 19
18	NSS	1	NOT SERVICED SEPARATELY, SLEEVE
19	NSS	1	NOT SERVICED SEPARATELY, SEAL
20	J934486	1	KIT, SERVICE, Crankshaft, Rear, Inc. 21 - 23
21	NSS	1	NOT SERVICED SEPARATELY, TOOL (Not Shown)
22	NSS	1	NOT SERVICED SEPARATELY, TOOL
23	NSS	1	NOT SERVICED SEPARATELY, SEAL

PDF created with pdfFactory trial version www.pdffactory.com

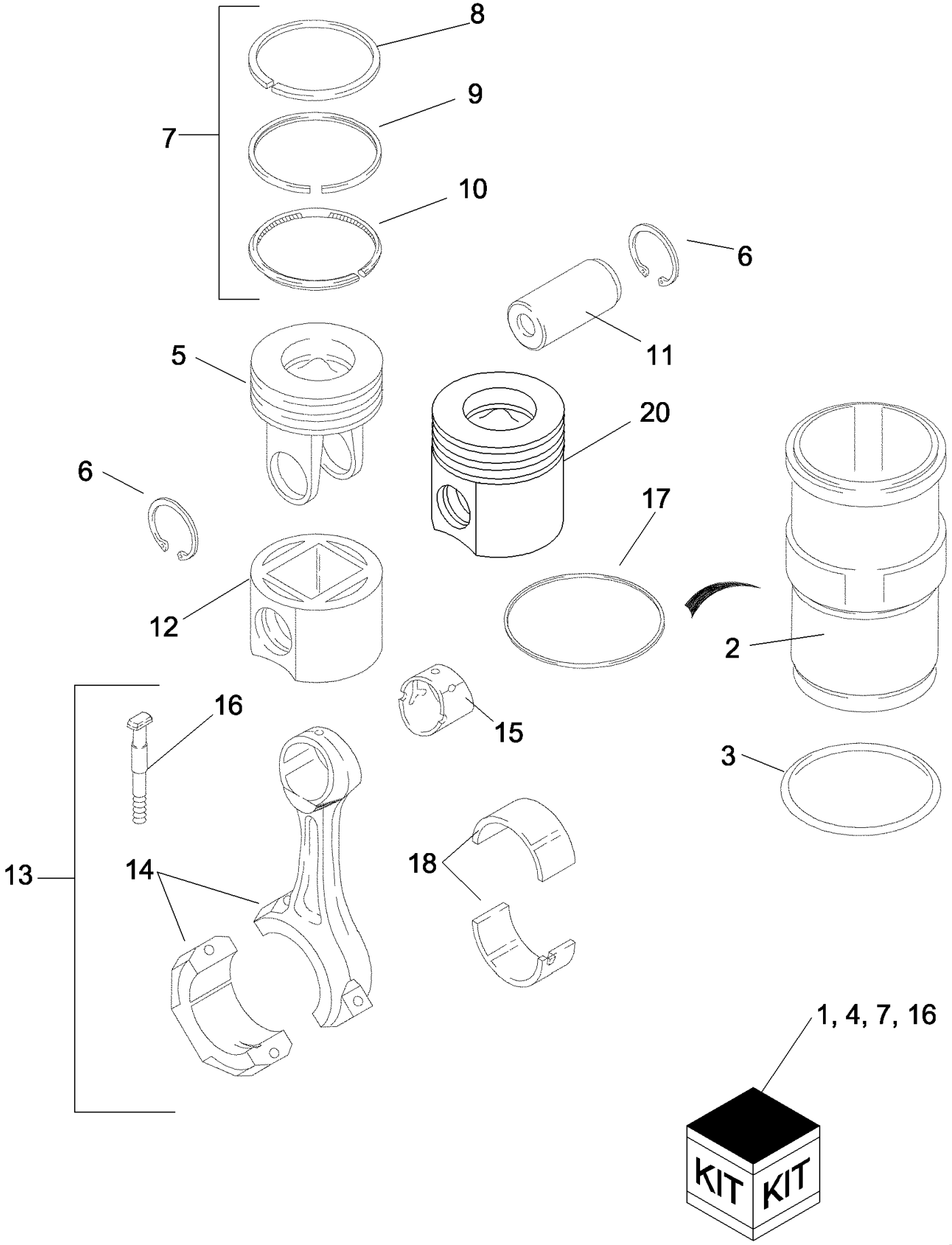

PDF created with pdfFactory trial version www.pdffactory.com

7088 AXIAL-FLOW COMBINE (EU) (4/08-)

02-28 PISTONS - CONNECTING RODS

ссылка	Номер детали	Кол-во	Описание
1	87356567	6	PISTON, And Sleeve Kit, Standard, Inc. 2 - 10, 7088
1	87343262	6	KIT, Piston And Sleeve, Inc. 2 - 10, 5088, 6088
2	J948095	1	SLEEVE CYLINDER,
3	J907177	1	O-RING, 1.75", Int., #175
4	87356533	6	KIT, PISTON & RINGS, Inc. 5 - 7, 7088
4	87378369	6	KIT, PISTON & RINGS, Inc. 6, 7, 20, 5088, 6088
5	NSS	1	NOT SERVICED SEPARATELY, PISTON, Top, 7088
6	100-21175	2	RING, SNAP, 1.75", Int, #175,
7	87343194	1	KIT, PISTON RINGS, Inc. 8 - 10
8	NSS	1	NOT SERVICED SEPARATELY, RING, Top
9	NSS	1	NOT SERVICED SEPARATELY, RING, Middle
10	NSS	1	NOT SERVICED SEPARATELY, RING, Bottom
11	87342670	6	PIN, PISTON,
12	NSS	1	NOT SERVICED SEPARATELY, SKIRT, Piston, 7088
13	87356735	1	CORE-ROD CONNECTING, , 7088
13	84145656C	1	CORE-ROD CONNECTING, , 5088, 6088
13	87356732	1	REMAN-ROD CONNECTING, N.A. Only, 7088
13	84145656R	1	REMAN-ROD CONNECTING, , 5088, 6088
13	87686998	6	ROD, CONNECTING, Inc. 14 - 16, 7088
13	84145656	6	ROD, CONNECTING, Inc. 14 - 16, 5088, 6088
14	NSS	1	NOT SERVICED SEPARATELY, ROD
15	87343250	1	BUSHING,
16	J944679	2	BOLT,
17	J924445	AR	SHIM, 0.254mm Thk, (.010")
17	J924446	AR	SHIM, 0.381mm Thk, (.015")
17	J924447	AR	SHIM, 0.508mm Thk, (.020")
17	J924448	AR	SHIM, 0.762mm Thk, (.030")
17	J924449	AR	SHIM, 1.000mm Thk, (.040")
18	87356776	6	KIT, SERVICE, Bearing Liner, Standard, 7088
18	87356768	6	BEARING, Liner Kit, Upper, Standard, 7088
18	87443389	6	BEARING LINER, Kit, Standard, 5088, 6088
18	84156219	6	BEARING LINER, Bearing Liner, Undersize 0.25 mm, 7088
18	87443529	6	BEARING LINER, Kit, Undersize 0.25 mm, 5088, 6088
18	84156220	6	BEARING LINER, Bearing Liner, Undersize 0.50 mm, 7088
18	87443532	6	BEARING LINER, Kit, Undersize 0.50 mm, 5088, 6088
18	84156221	6	BEARING LINER, Bearing Liner, Undersize 0.75 mm, 7088
18	87443533	6	BEARING LINER, Kit, Undersize 0.75 mm, 5088, 6088
18	84156222	6	BEARING LINER, Bearing Liner, Undersize 1.00 mm, 7088
18	87443534	6	BEARING LINER, Kit, Undersize 1.00 mm, 5088, 6088
19	87546493	1	KIT, REPAIR, REPLACEMENT, Inc. 1 - 3, 6 - 13, 15, 87737237,87308050, 87447959
20	NSS	1	NOT SERVICED SEPARATELY, PISTON, 5088, 6088

PDF created with pdfFactory trial version www.pdffactory.com

02-29 FLYWHEEL AND BACKING PLATE

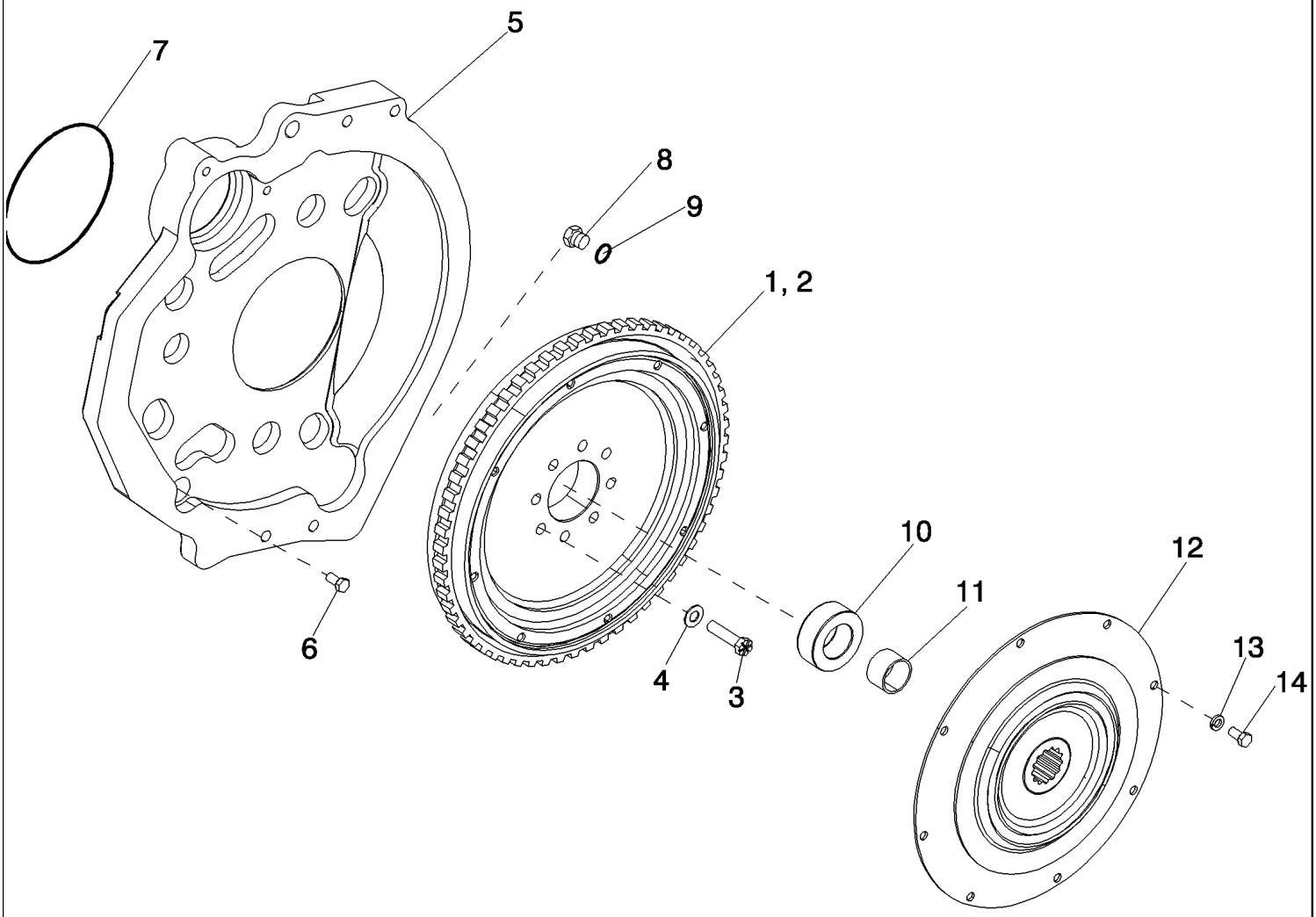

PDF created with pdfFactory trial version www.pdffactory.com

7088 AXIAL-FLOW COMBINE (EU) (4/08-)

02-29 FLYWHEEL AND BACKING PLATE

ссылка	Номер детали	Кол-во	Описание
1	87553493	1	FLYWHEEL,
2	J905427	1	GEAR,
3	J908181	8	SCREW, 12 x 50 mm
4	J900269	8	WASHER,
5	J913593	1	PLATE,
6	854-12040	10	BOLT, Hex Flg, M12 x 40, 10.9,
7	J912473	1	SEALRING,
8	J910248	1	PLUG,
9	238-5212	1	O-RING, -212, 70 Duro, .859" ID x .139" Thk,
10	87529745	1	BUSHING, Flywheel
11	87530084	1	BUSHING,
12	87541980	1	COUPLING, Torsional Damper
13	392-21038	8	WASHER, LOCK, 3/8",
14	426-612	8	BOLT, Hex, 3/8"-16 x 3/4", G8, Full Thd,

PDF created with pdfFactory trial version www.pdffactory.com

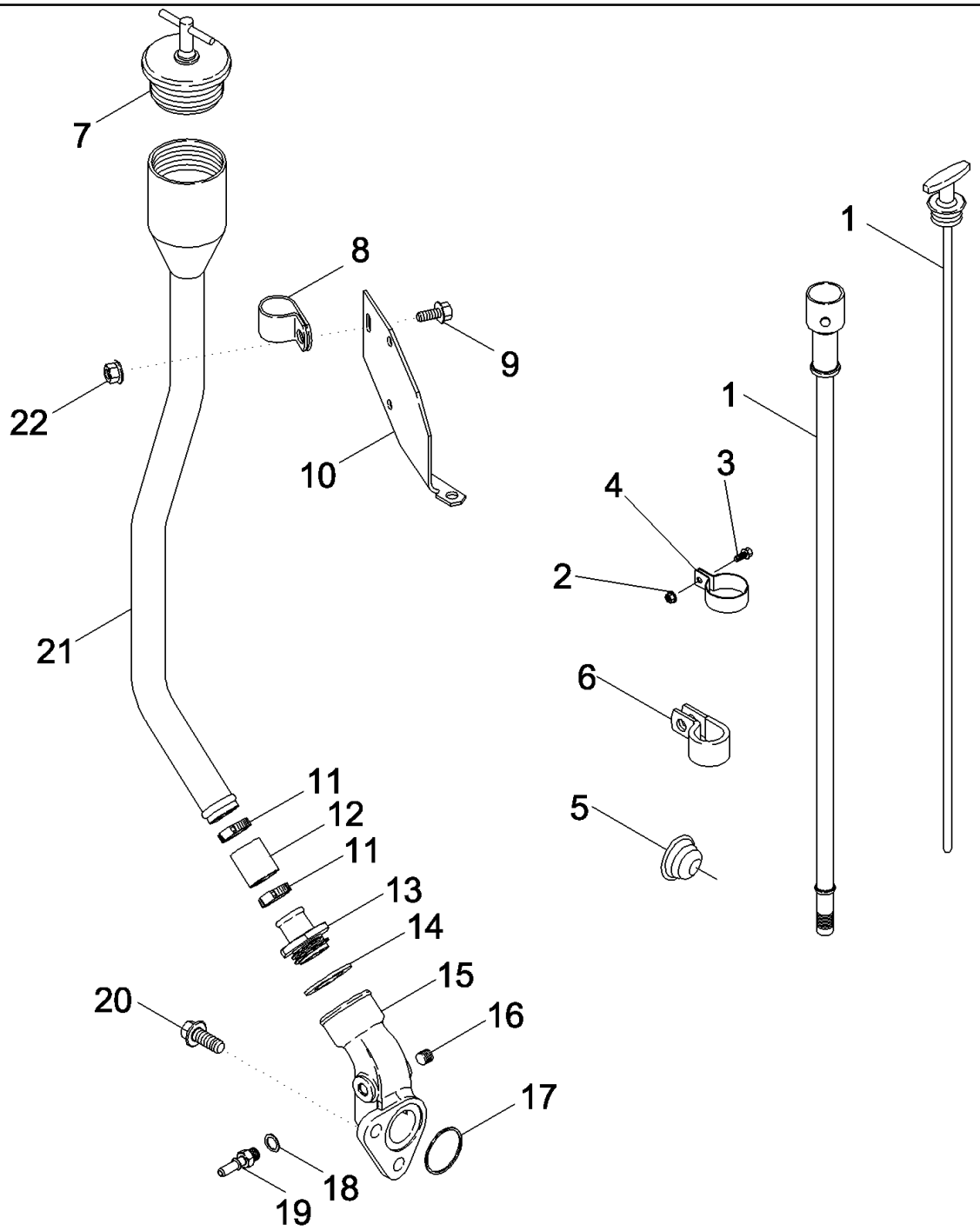

RI08D013

PDF created with pdfFactory trial version www.pdffactory.com

7088 AXIAL-FLOW COMBINE (EU) (4/08-)

02-30 OIL DIPSTICK, OIL FILL TUBE - ENGINE

ссылка	Номер детали	Кол-во	Описание
1	87350501	1	DIPSTICK,
2	J900589	1	NUT, M8 x 1.25
3	845-8016	1	BOLT, Hex Flg, M8 x 16, 8.8, Full Thd,
4	118788A1	1	CLAMP,
5	J943808	1	PLUG,
6	87010656	1	CLAMP, 11/16", Insul, 3/8" Bolt,
7	A77424	1	PLUG, Cap
8	87350859	1	CLIP,
9	J924962	1	BOLT, M8 x 1.25 x 16; 10.9
10	87350884	1	BRACKET,
11	87350865	2	CLAMP, HOSE, 1-1/16 - 2
12	87350823	1	HOSE,
13	87350868	1	ADAPTER,
14	87350871	1	SEAL,
15	87341096	1	CONNECTOR, HYD.,
16	217-432	1	PLUG, Hex Soc, 1/4"-18,
17	J906696	1	SEAL,
18	87341228	1	O-RING,
19	87341100	1	ADAPTER,
20	844-12030	2	BOLT, Hex Flg, M12 x 30, 8.8,
21	87350882	1	TUBE,
22	825-2408	2	NUT, M8 x 1.25, Flg, Cl 8,

PDF created with pdfFactory trial version www.pdffactory.com

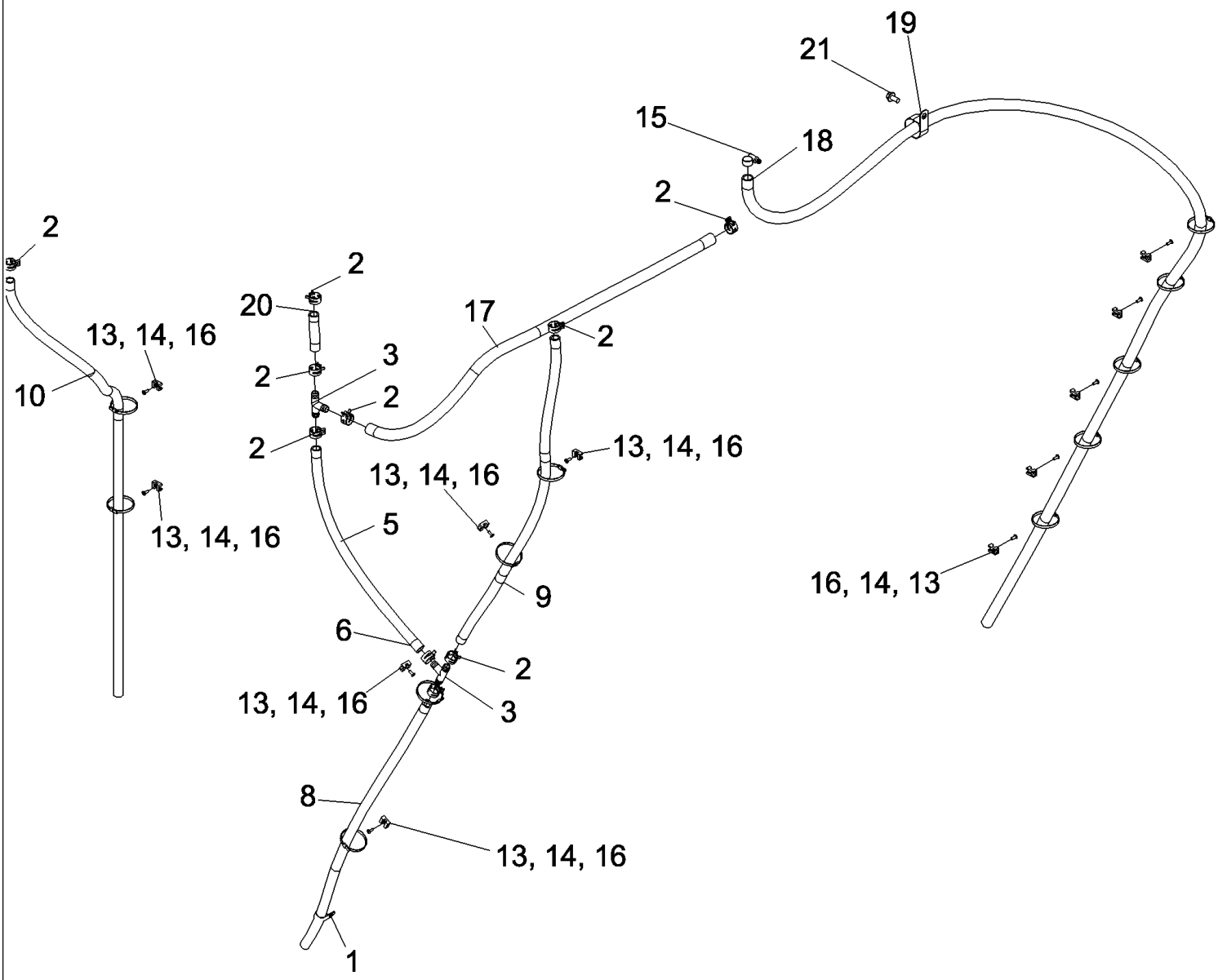

PDF created with pdfFactory trial version www.pdffactory.com

7088 AXIAL-FLOW COMBINE (EU) (4/08-)

02-31 OIL DRAIN AND BREATHER SYSTEM - 7088

ссылка	Номер детали	Кол-во	Описание
1	515-23222	1	CLAMP, 7/8", Insul, 3/8" Bolt, Lower Hose
2	1954736C1	10	CLAMP, HOSE,
3	1977169C1	2	TEE, Oil Drain Line
4	NSS	1	NOT SERVICED SEPARATELY, HOSE, Reservoir Drain, 735 mm (28.94"), Cut From 87106496
5	NSS	1	NOT SERVICED SEPARATELY, HOSE, Reservoir Drain, 940 mm (37"), Cut From 87106496
6	NSS	1	NOT SERVICED SEPARATELY, HOSE, Breather And Intermediate, 1050 mm (41.34"), Cut From 87106496
7	1977293C3	1	HOSE, Drain And Breather
8	86590413	11	CLAMP,
9	445394	11	RIVET, Pop, M4.8 x 12.7,
10	214-1516	1	CLAMP, HOSE, #16, .81/1.50 Type F Worm, W/liner,
11	306132C1	11	STRAP, CABLE, .30" x 14.5",
12	NSS	1	NOT SERVICED SEPARATELY, HOSE, Rotor Gearbox Drain, 1150 mm (45.28"), Cut From 87106496
13	NSS	1	NOT SERVICED SEPARATELY, HOSE, Blowby, 3275 mm (129"), Cut From 87314021
14	515-25476	1	CLAMP, 1 7/8", Insul, 1/2" Bolt,
15	NSS	1	NOT SERVICED SEPARATELY, HOSE, Drain And Breather, 75 mm (2.95"), Cut From 87106496
16	857-10020	1	BOLT, Hex Flg, M10 x 20, 10.9,

PDF created with pdfFactory trial version www.pdffactory.com

02-33 GASKET KIT - CYLINDER BLOCK

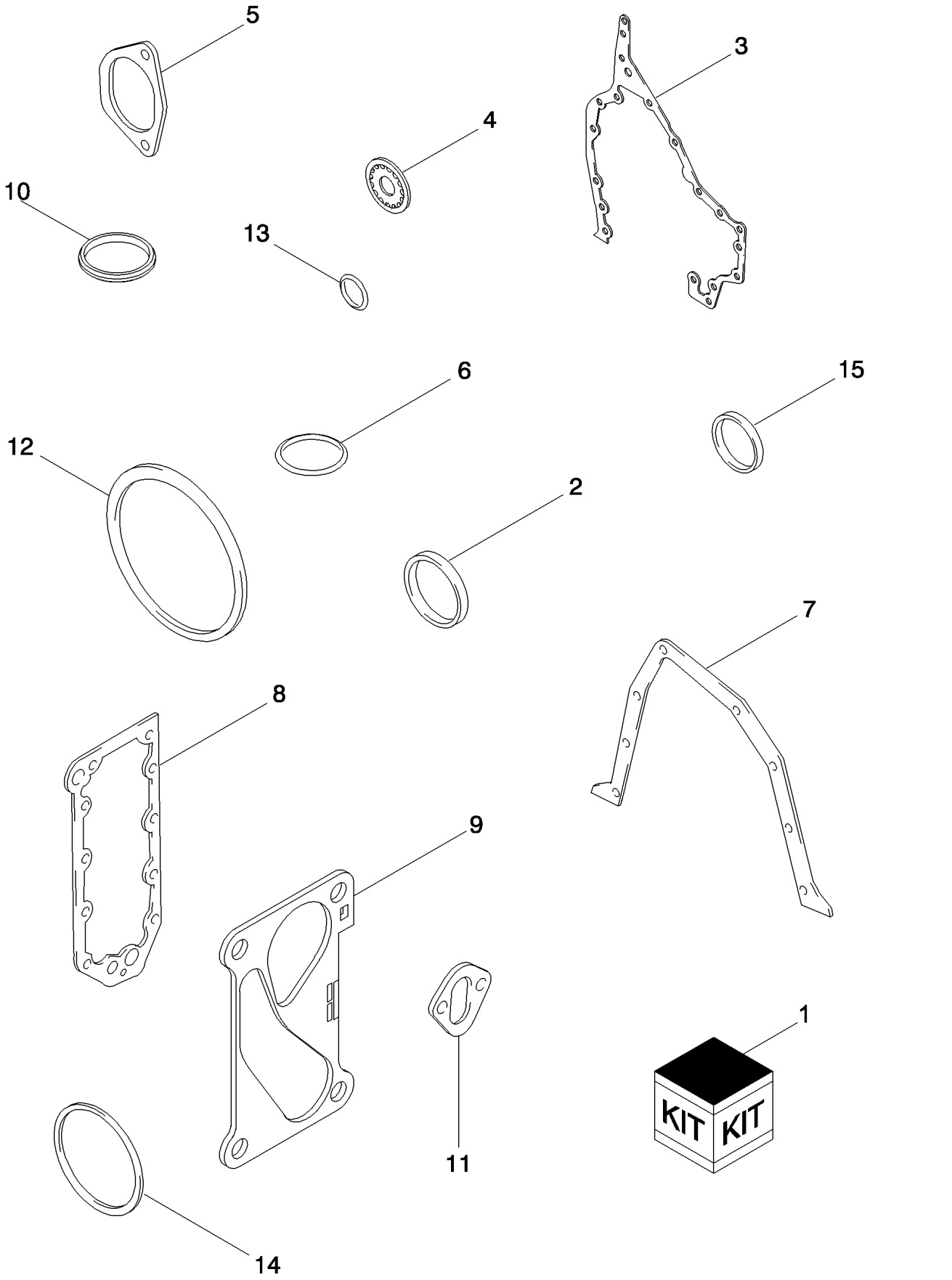

PDF created with pdfFactory trial version www.pdffactory.com

7088 AXIAL-FLOW COMBINE (EU) (4/08-)

02-33 GASKET KIT - CYLINDER BLOCK

ссылка	Номер детали	Кол-во	Описание
1	87351543	1	KIT, ENGINE GASKET, Cylinder Block, Tier 3 Engines, Inc. 2 - 15
2	J903475	1	SEAL, Front Cover
3	J944293	1	GASKET, Gear Housing
4	87417767	1	WASHER, SEALING,
5	87447959	1	GASKET, Oil Suction
6	238-5244	1	O-RING, -244, 70 Duro, 4.234" ID x .139" Thk,
7	87447962	1	GASKET, Rear Cover
8	J918174	1	GASKET, Oil Cooler
9	87612306	1	GASKET, Coolant Filter/Conditioner
10	J906696	1	SEAL,
11	87308050	1	GASKET, Oil Pan
12	J912473	1	SEALRING, Rear Seal Cover
13	238-7241	1	O-RING, -241, Cl 7, 3.859" ID x .139" Thk,
14	87346600	6	WASHER, SEALING, Sleeve to Block
15	J926722	1	SEAL, Lube Oil Supply

PDF created with pdfFactory trial version www.pdffactory.com

7088 AXIAL-FLOW COMBINE (EU) (4/08-)

02-34 GASKET KIT - VALVE GRIND

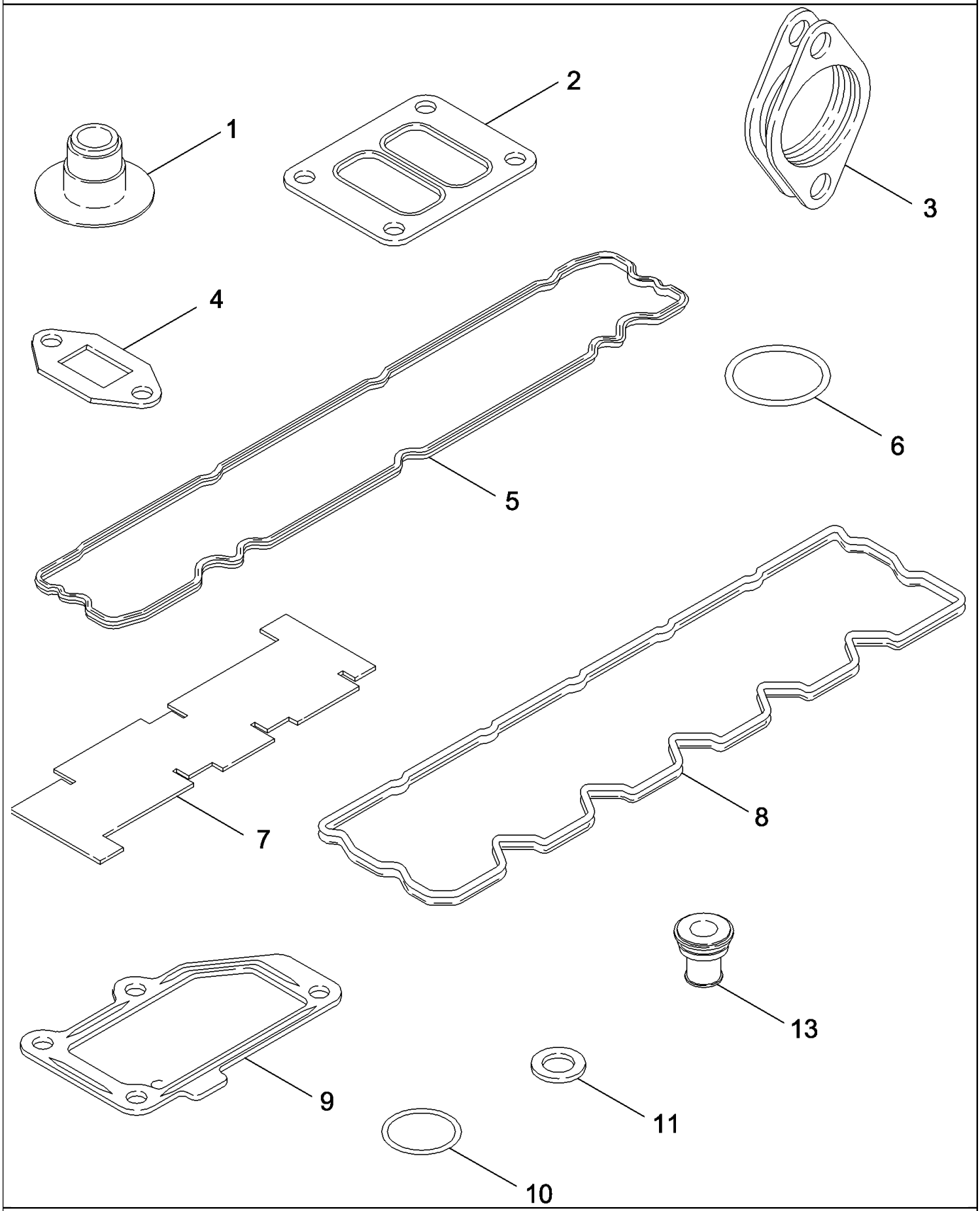

PDF created with pdfFactory trial version www.pdffactory.com

7088 AXIAL-FLOW COMBINE (EU) (4/08-)

02-34 GASKET KIT - VALVE GRIND

ссылка	Номер детали	Кол-во	Описание
	87348974	1	KIT, GASKET, Valve Grind, Inc. 1 - 13
1	J943888	12	SEAL, Valve Stem - Blue
1	87352235	12	SEAL, Valve Stem
2	J901356	1	GASKET, Turbocharger
3	J937479	6	GASKET, MANIFOLD, Exhaust
4	J937706	1	GASKET, Oil Drain
5	87345861	1	GASKET, Valve Cover
6	87348322	6	SEAL,
7	87404692	1	GAUGE, Cylinder Head
8	87344755	1	GASKET, Rocker Lever Housing
9	87335272	2	GASKET,
10	J678603	1	O-RING, 9.3MM ID x 2.2 Thk,
11	313262A1	1	O-RING, .364" ID x .070" Thk,
13	87342136	8	ISOLATOR,

PDF created with pdfFactory trial version www.pdffactory.com

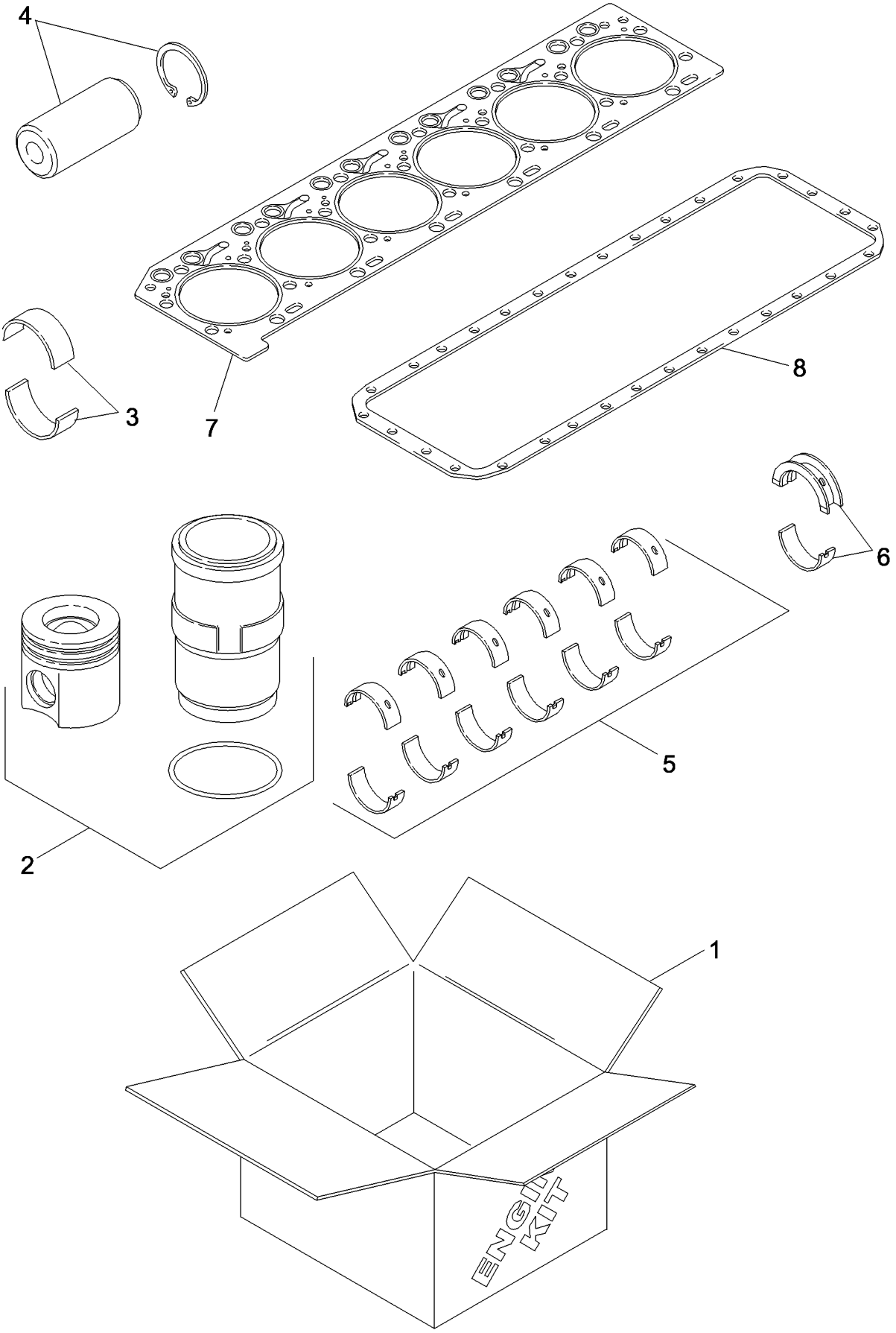

RI08D005

PDF created with pdfFactory trial version www.pdffactory.com

7088 AXIAL-FLOW COMBINE (EU) (4/08-)

02-35 KIT ENGINE OVERHAUL

ссылка	Номер детали	Кол-во	Описание
1	87356539	1	KIT, ENGINE OVERHAUL, Inc. 2 - 8, 7088
1	87348859	1	KIT, ENGINE OVERHAUL, Inc. 2 - 8, 5088, 6088
2	87356567	6	PISTON, And Sleeve Kit, 7088
2	87343262	6	KIT, Piston And Sleeve, 5088, 6088
3	87356776	6	KIT, SERVICE, Bearing Liner, Connecting Rod, Standard, 7088
3	87443389	6	BEARING LINER, Kit, Connecting Rod, Standard, 5088, 6088
4	87342670	6	PIN, PISTON,
5	J945930	6	BEARING, CRANKSHAFT, Main, Standard
6	J945929	1	BEARING, CRANKSHAFT, Thrust, Standard
7	87737237	1	GASKET, CYLINDER HEAD,
8	87308050	1	GASKET, Oil Pan

PDF created with pdfFactory trial version www.pdffactory.com

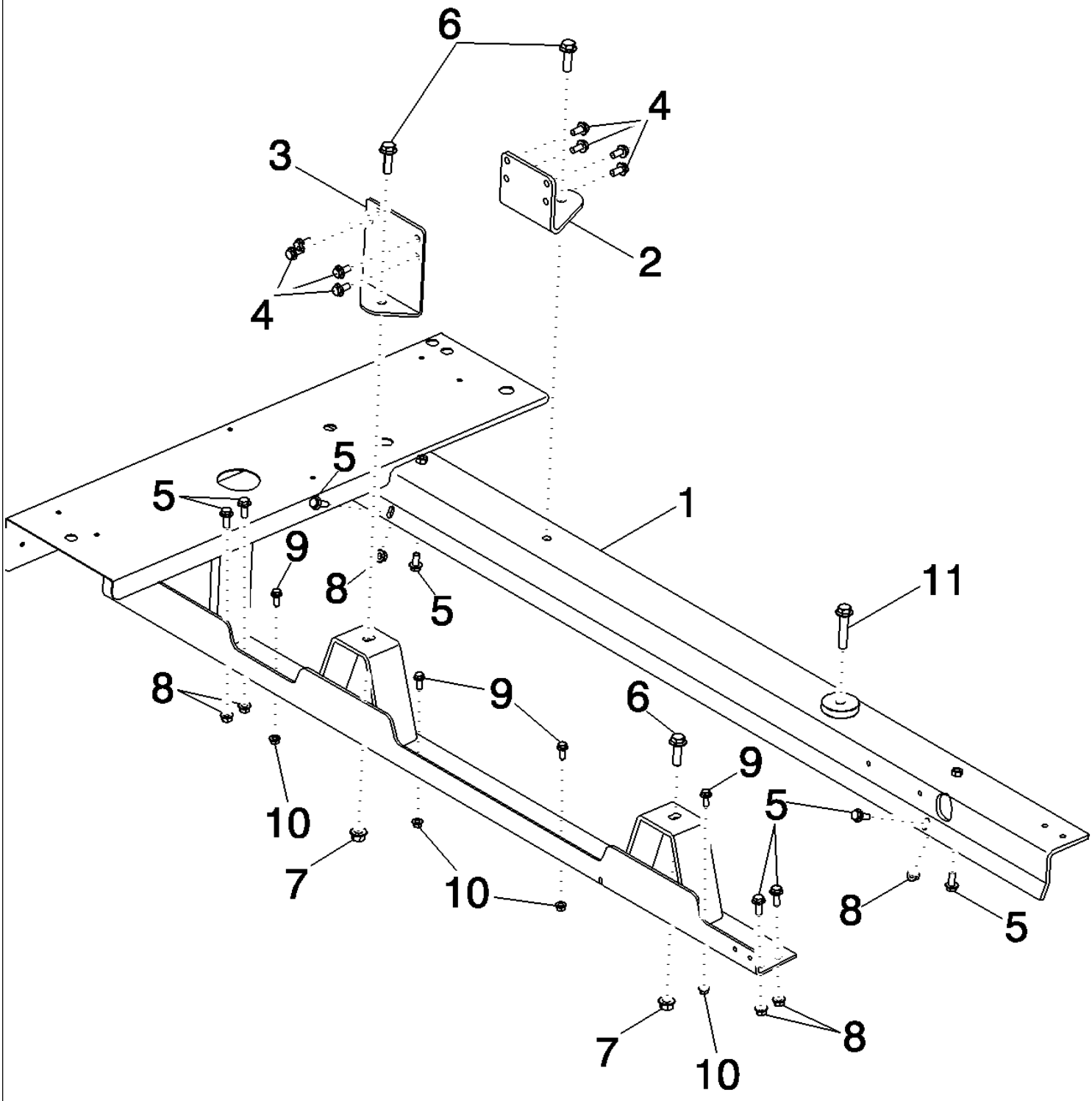

PDF created with pdfFactory trial version www.pdffactory.com

7088 AXIAL-FLOW COMBINE (EU) (4/08-)

02-36 MOUNTING, ENGINE

ссылка	Номер детали	Кол-во	Описание
1	87675131	1	FRAME, Engine Mount
2	87675920	1	SHEET ASSY., Engine Front, Right Hand
3	87387631	1	BRACKET, Engine Front, Left Hand
4	857-12025	9	BOLT, Hex Flg, M12 x 25, 10.9,
5	87030508	7	BOLT, Hex Flg, M12 x 30, 10.9, Full Thd,
6	857-16050	3	BOLT, Hex Flg, M8 x 150, 8.8,
7	87016581	2	NUT, LOCK, M16 x 2, Flg, Cl 10,
8	86512497	7	NUT, M12 x 1.75, Flg, Cl 10,
9	86705429	4	BOLT,
10	86050279	4	NUT, M10 x 1.5, Flg, Cl 10,
11	87646188	1	BOLT,
12	237682A1	1	STRIP, PROTECTION,

PDF created with pdfFactory trial version www.pdffactory.com

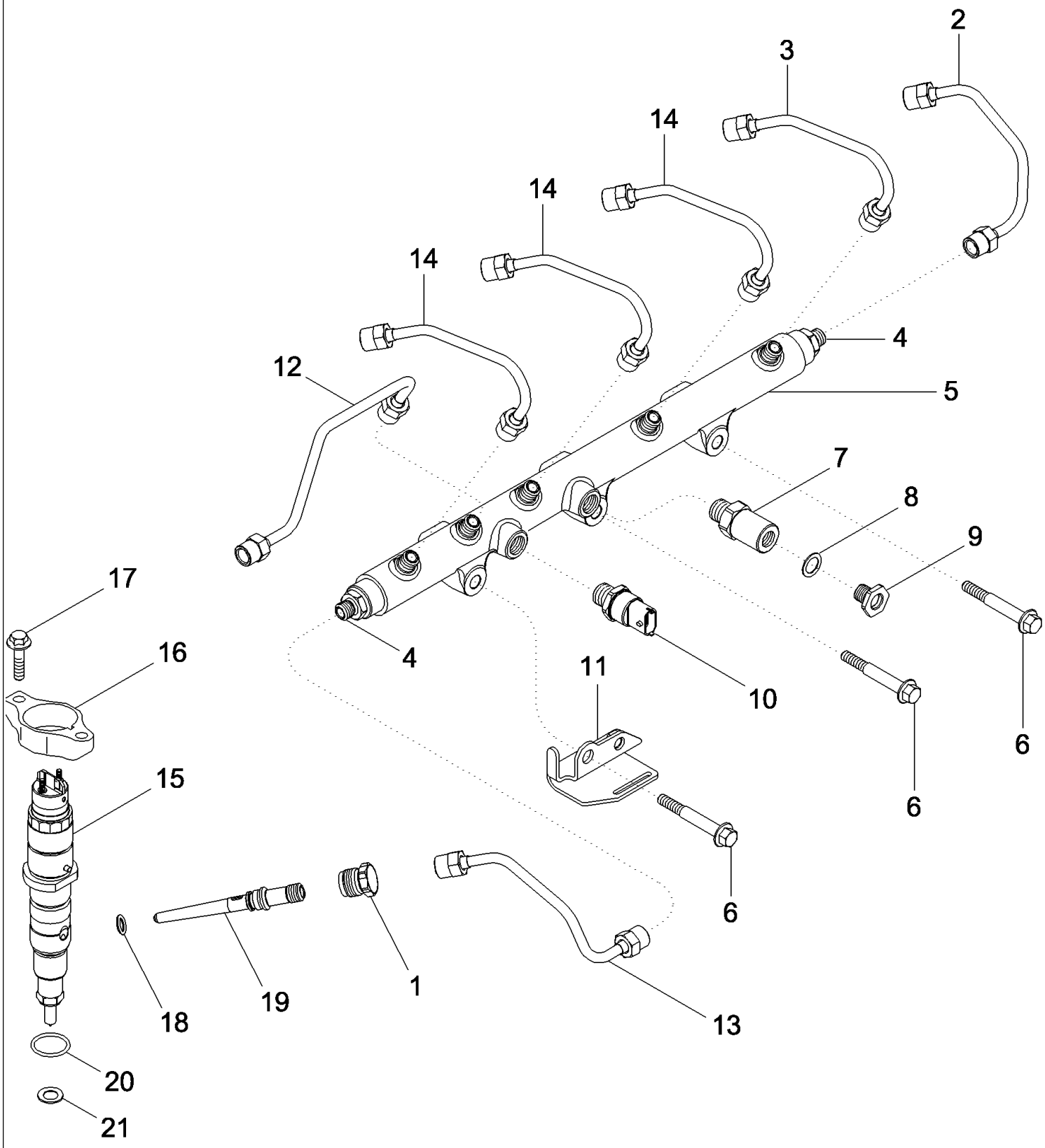

PDF created with pdfFactory trial version www.pdffactory.com

7088 AXIAL-FLOW COMBINE (EU) (4/08-)

03-01 FUEL INJECTION SYSTEM

ссылка	Номер детали	Кол-во	Описание
1	87347221	6	RETAINER,
2	87348184	1	TUBE,
3	87348175	1	TUBE,
4	87348150	2	FITTING, High Pressure Fuel
5	87347257	1	KIT, Manifold, Inc. 2 Decals
6	854-10070	3	BOLT, Hex Flg, M10 x 70, 10.9,
7	87347275	1	VALVE, PRESSURE RELIEF,
8	87348161	1	WASHER, SEALING,
9	87348154	1	ADAPTER,
10	87727942	1	SENSOR,
11	NSS	1	NOT SERVICED SEPARATELY, BRACE, Tube
12	87348190	1	TUBE,
13	87348171	1	TUBE,
14	87348283	3	TUBE,
15	87538122	6	INJECTOR, FUEL SYSTEM, Inc. 20, 21
16	87343005	6	CLAMP,
17	87343006	12	BOLT,
18	87348322	6	SEAL,
19	87348301	6	FITTING, Inc. 18
20	4890926	1	O-RING,
21	4899689	1	WASHER, SEALING,
22	87526453	1	SUPPORT,
23	87526454	1	ISOLATOR,
24	87526455	1	ISOLATOR,
25	J991277	1	BRACE,
26	J944717	1	SCREW,

PDF created with pdfFactory trial version www.pdffactory.com

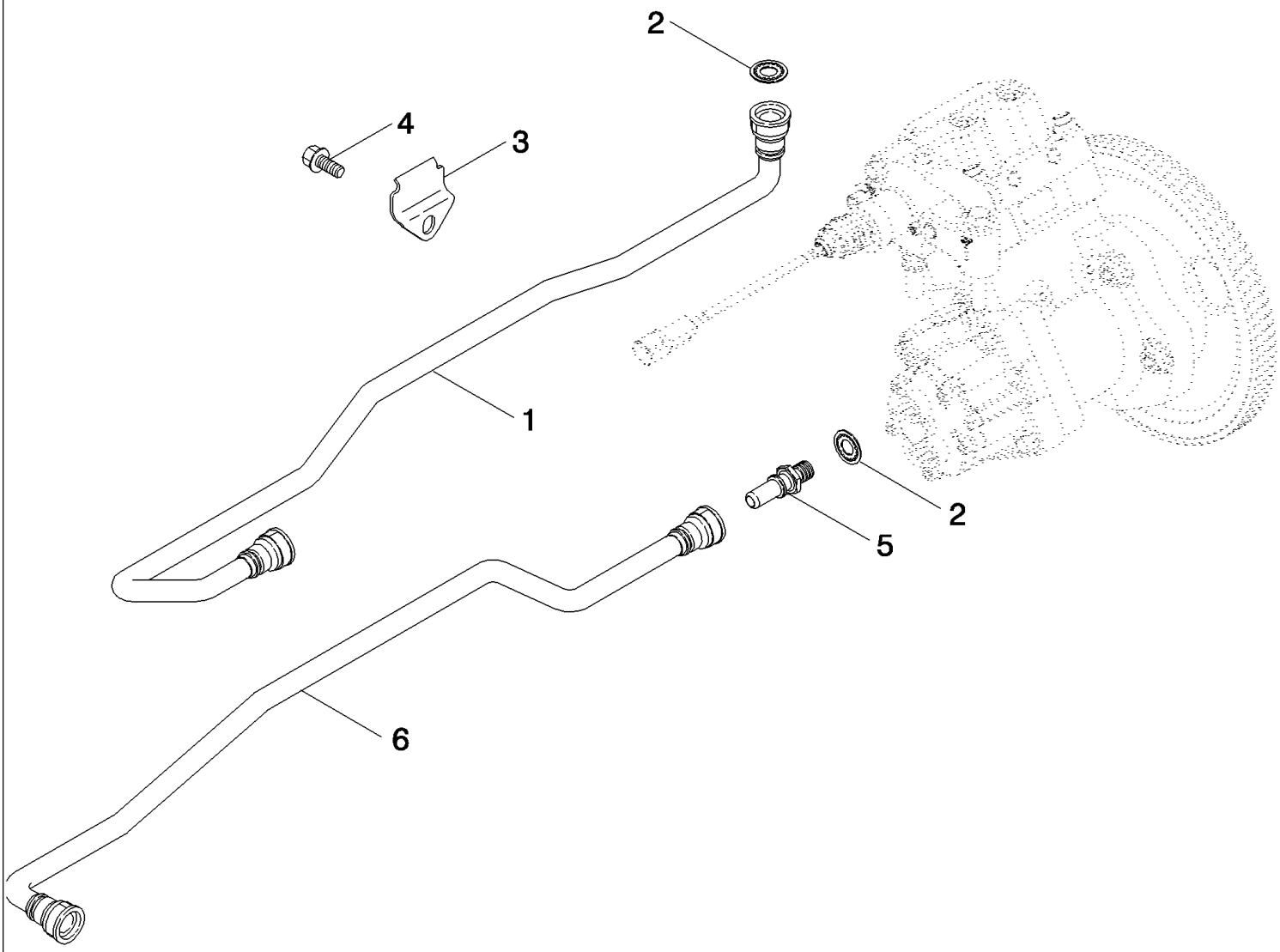

RI08D010

PDF created with pdfFactory trial version www.pdffactory.com

7088 AXIAL-FLOW COMBINE (EU) (4/08-)

03-02 FUEL FILTER - PUMP, TRANSFER

ссылка	Номер детали	Кол-во	Описание
1	87349483	1	TUBE, Fuel Supply
2	87346600	2	WASHER, SEALING,
3	87339057	1	BRACKET,
4	J925883	1	SCREW, M8 x 16; 10.9
5	87349484	2	ADAPTER,
6	87349485	1	TUBE ASSY., Fuel Supply

PDF created with pdfFactory trial version www.pdffactory.com

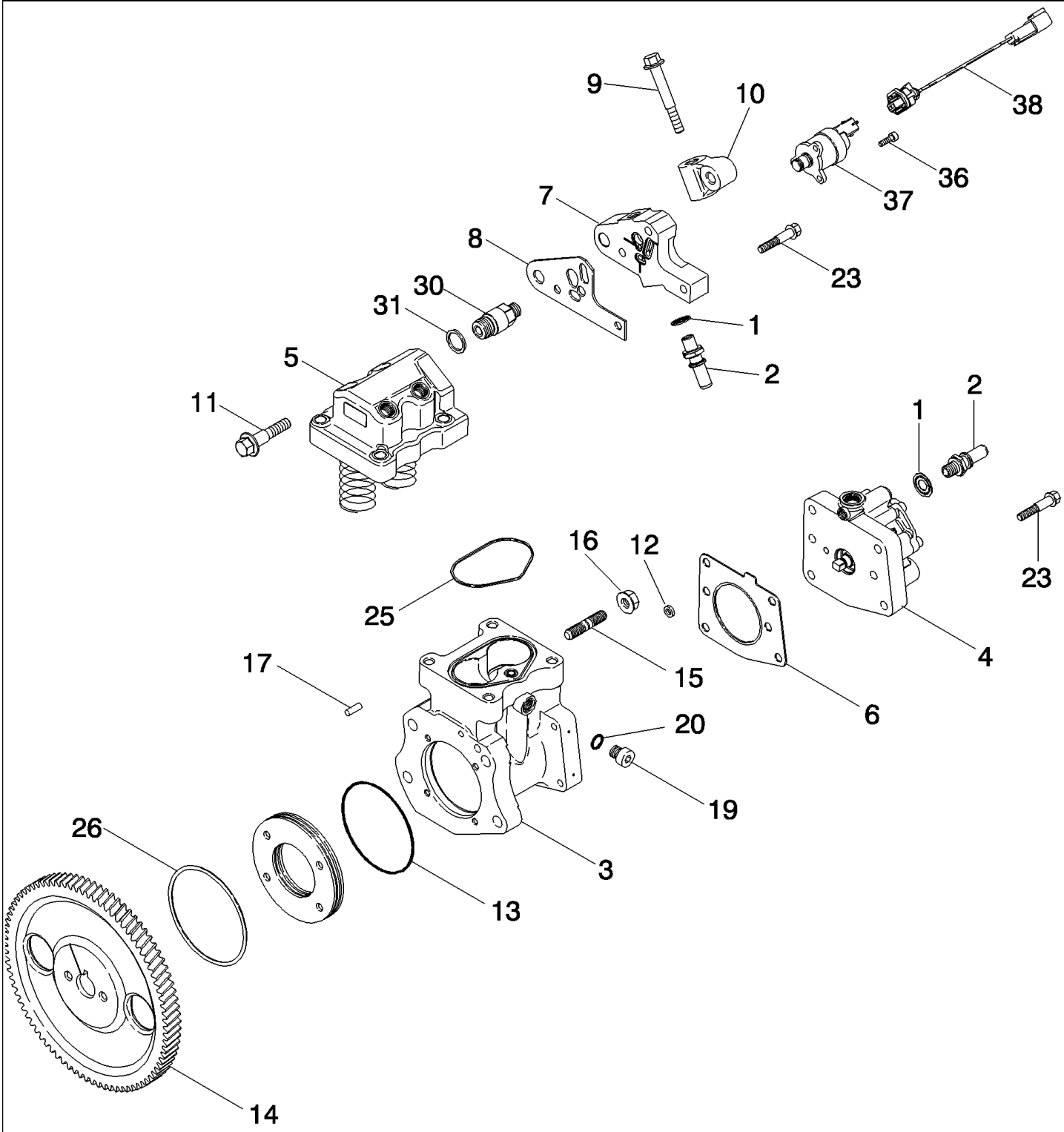

RI08D007

PDF created with pdfFactory trial version www.pdffactory.com

7088 AXIAL-FLOW COMBINE (EU) (4/08-)

03-03 FUEL INJECTION - PUMP AND DRIVE

ссылка	Номер детали	Кол-во	Описание
1	87346600	3	WASHER, SEALING,
2	87349484	3	ADAPTER,
3	87351467	1	BODY, Fuel Pump
4	87351478	1	PUMP, FUEL,
5	87684601	1	HEAD, Fuel Pump
6	87377387	1	GASKET, Cover Plate
7	87351486	1	ADAPTER, Fuel Pump
8	87351493	1	GASKET, Fuel Pump to Gear Pump
9	844-10070	1	BOLT, Hex Flg, M10 x 70, 8.8,
10	87346420	1	SUPPORT,
11	854-12050	1	BOLT, Hex Flg, M12 x 50, 10.9,
12	J926722	1	SEAL,
13	238-7241	2	O-RING, -241, Cl 7, 3.859" ID x .139" Thk,
14	J942764	1	GEAR, Fuel Pump
15	J937123	4	STUD,
16	825-2410	4	NUT, M10 x 1.5, Flg, Cl 8,
17	J329899	1	DOWEL,
18	J330252	1	WASHER, (Not Shown)
19	J678923	3	PLUG, Inc. 41
20	637-72081	1	O-RING, Cl 7, 8.1MM ID x 1.6 Thk,
21	J867640	1	O-RING, (Not Shown)
22	J926593	1	NUT, M20 x 1.5 (Not Shown)
23	854-8040	7	BOLT, Hex Flg, M8 x 40, 10.9,
24	87351459	4	SCREW, (Not Shown)
25	J4010636	1	O-RING, Pump Body
26	87351514	1	SEAL,
27	87351521	4	BOLT, (Not Shown)
28	J867641	4	O-RING, (Not Shown)
29	J867651	2	SEAL, (Not Shown)
30	87351522	1	FITTING, High Pressure
31	87351523	1	WASHER, SEALING,
32	87351524	2	WASHER, SEALING, (Not Shown)
33	87351525	2	PLUG, (Not Shown)
34	87351528	2	PLUG, (Not Shown)
35	87351531	2	WASHER, SEALING, (Not Shown)
36	87351533	3	SCREW,
37	87351534	1	ACTUATOR, ETR Fuel
37	87351534R	1	REMAN-INJECTION PUMP,
37	87351534C	1	CORE-INJECTION PUMP,
38	NSS	1	NOT SERVICED SEPARATELY, HARNESS, Wire, Order 87351534
39	87351536	1	ADAPTER, Fuel Pump (Not Shown)

PDF created with pdfFactory trial version www.pdffactory.com

ссылка	Номер детали	Кол-во	Описание
39	87351536R	1	REMAN-INJECTION PUMP,
39	87351536C	1	CORE-INJECTION PUMP,
40	87351504	1	HUB, Distributor Drive (Not Shown)

PDF created with pdfFactory trial version www.pdffactory.com

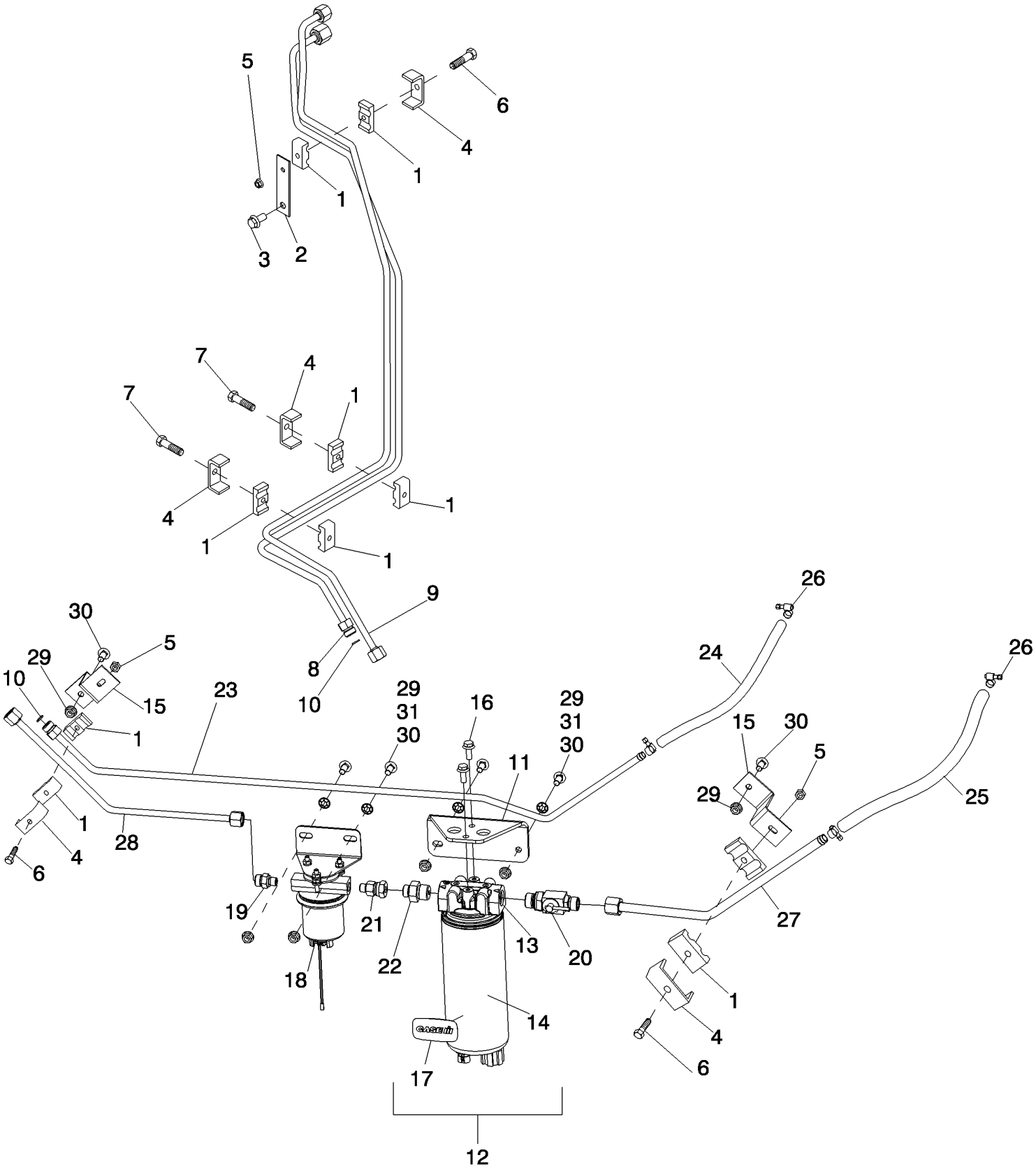

PDF created with pdfFactory trial version www.pdffactory.com

7088 AXIAL-FLOW COMBINE (EU) (4/08-)

03-04 FUEL, SUPPLY AND RETURN

ссылка	Номер детали	Кол-во	Описание
1	430357	10	CLAMP, Fuel Tubes
2	1330564C1	1	PLATE, Fuel Line
3	409-7612	1	BOLT, Hex Flg, 3/8"-16 x 3/4", Serr, Fuel Line Plate
4	431941	5	SUPPORT, Fuel Line Clamp
5	86050300	3	NUT, M6 x 1, Flg, Cl10,
6	87670759	3	BOLT,
7	87670760	2	BOLT,
8	87670384	1	TUBE ASSY., Fuel Supply
9	87670385	1	TUBE ASSY., Fuel Return
10	238-6012	2	O-RING, -012, 90 Duro, .364" ID x .070" Thk,
11	87316348	1	BRACKET, Fuel Filter
12	87302103	1	FILTER ASSY., Fuel, Inc. 13, 14
13	NSS	1	NOT SERVICED SEPARATELY, HEAD, Fuel Filter
14	87307432	1	FILTER, FUEL, Spin-On
15	87727868	2	BRACKET, Fuel Line Supply
16	409-7512	2	BOLT, Hex Flg, 5/16"-18 x 3/4", Serr,
17	87679098	1	DECAL, CIH Filter
18	87756610	1	PUMP, FUEL,
19	86580177	1	CONNECTOR, HYD., 11/16"-16 ORFS x M12 x 1.5 ORB,
20	87639522	1	VALVE, SHUT-OFF,
21	87643580	1	CONNECTOR, HYD.,
22	201-139	1	CONNECTOR, HYD., 11/16"-16 ORFS x 7/8"-14 ORB,
23	87670382	1	TUBE ASSY., Fuel Return Tank
24	84127930	1	HOSE, Fuel Return Tank
25	87751191	1	HOSE, Fuel Supply Tank
26	214-1706	4	CLAMP, HOSE, #6, 0.44/0.78 Type M Worm,
27	87670381	1	TUBE ASSY., Fuel Supply Tank
28	87670383	1	TUBE ASSY., Fuel Supply
29	86507066	6	NUT, M8 x 1.25, Flg, Cl 10,
30	87682383	6	BOLT,
31	1955188C1	4	NUT,

PDF created with pdfFactory trial version www.pdffactory.com

03-05 FUEL FILTER, ENGINE

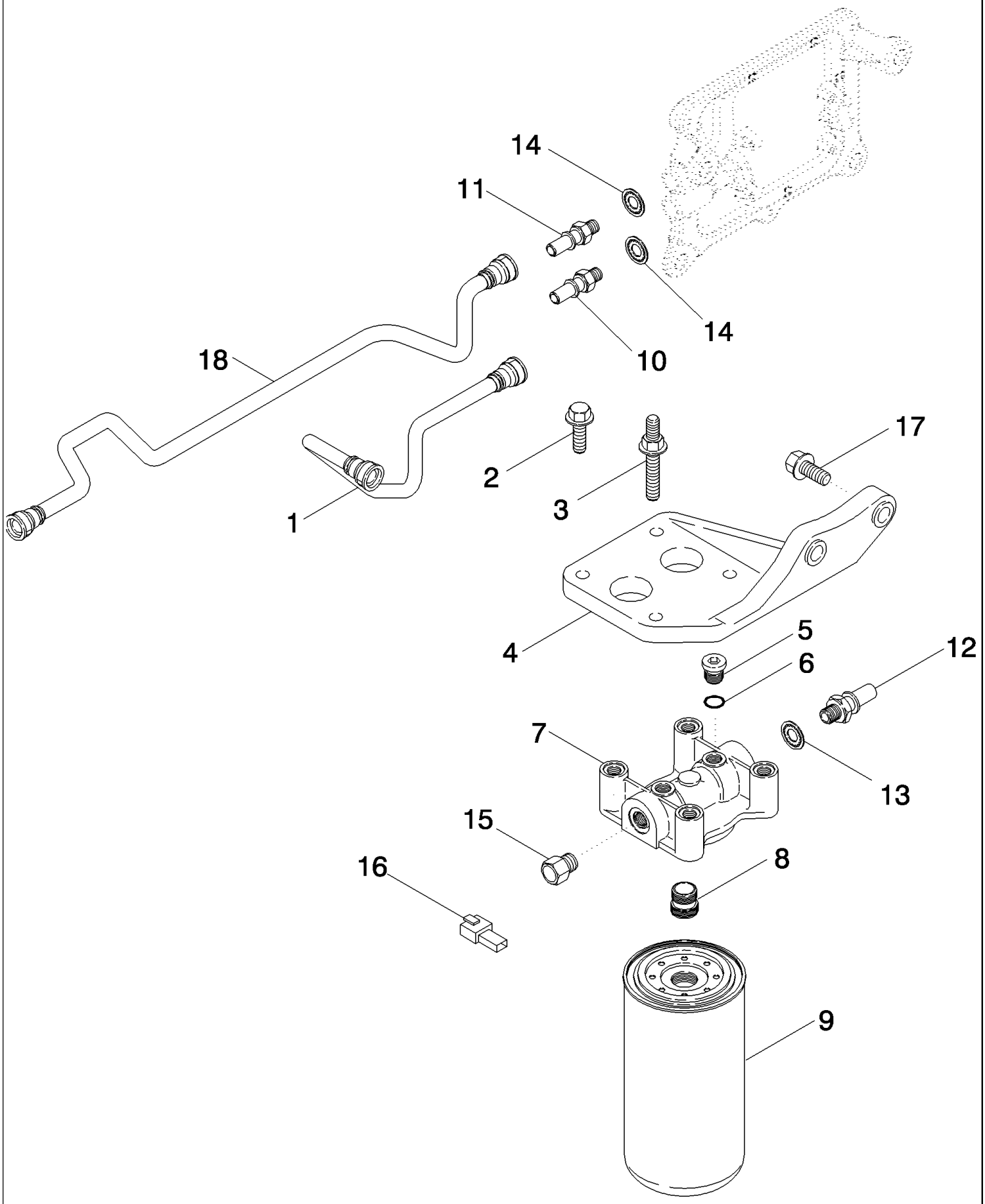

PDF created with pdfFactory trial version www.pdffactory.com

7088 AXIAL-FLOW COMBINE (EU) (4/08-)

03-05 FUEL FILTER, ENGINE

ссылка	Номер детали	Кол-во	Описание
1	87351057	1	TUBE, Upper Supply
2	87349737	2	BOLT,
3	845-8030	2	BOLT, Hex Flg, M8 x 30, 8.8,
4	87349731	1	SUPPORT,
5	J678923	2	PLUG, 10 mm, Inc. 4
6	637-72081	1	O-RING, Cl 7, 8.1MM ID x 1.6 Thk,
7	87349758	1	HEAD, FILTER,
8	87349753	1	ADAPTER,
9	87360565	1	FILTER, FUEL,
10	87351059	1	ADAPTER,
11	87351058	1	ADAPTER,
12	87349484	1	ADAPTER,
13	87417767	1	WASHER, SEALING,
14	87346600	2	WASHER, SEALING,
15	201-112	1	CONNECTOR, HYD., 13/16"-16 ORFS x 7/8"-14 ORB,
16	87543017	1	COVER, PROTECTIVE, Wiring Harness
17	87349727	2	BOLT,
18	87341277	1	TUBE, Lower Supply

PDF created with pdfFactory trial version www.pdffactory.com

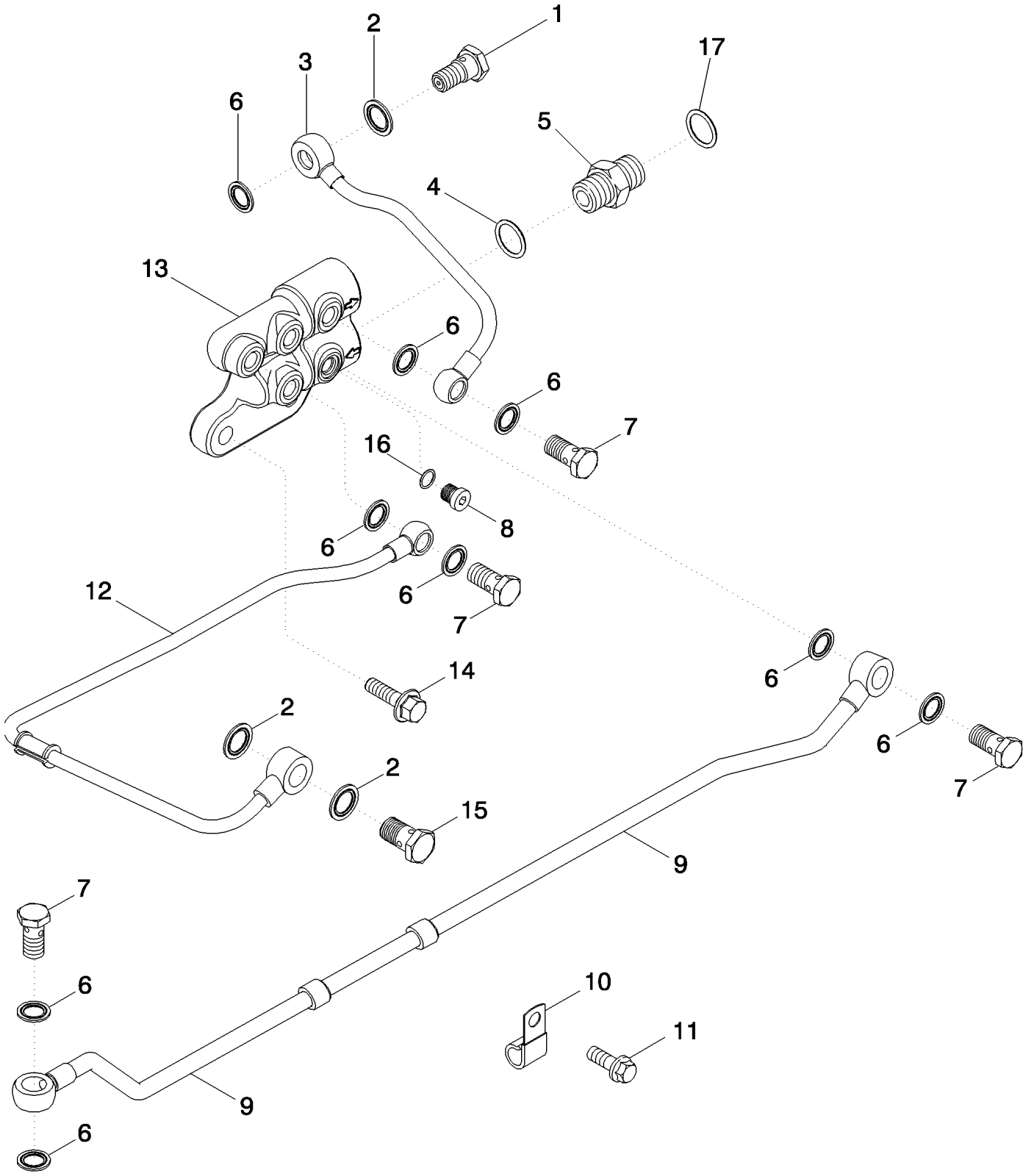

RI08D006

PDF created with pdfFactory trial version www.pdffactory.com

7088 AXIAL-FLOW COMBINE (EU) (4/08-)

03-06 FUEL, DRAIN

ссылка	Номер детали	Кол-во	Описание
1	87346562	1	VALVE, CHECK,
2	87417767	3	WASHER, SEALING,
3	87350046	1	TUBE,
4	237-6008	1	O-RING, 8-1, 90 Duro, .644" ID x .087" Thk,
5	201-106	1	CONNECTOR, HYD., 11/16"-16 ORFS x 3/4"-16 ORB,
6	87346600	9	WASHER, SEALING,
7	J903035	4	BOLT, BANJO, M12 x 1.50 x 24
8	J678923	1	PLUG, Inc. 16
9	87350033	1	TUBE,
10	87350023	1	CLIP,
11	844-10020	1	BOLT, Hex Flg, M10 x 20, 8.8,
12	87350034	1	TUBE,
13	87350030	1	BLOCK, CONNECTING,
14	87349727	2	BOLT, M10 x 1.50 x 35
15	J924725	1	BOLT, BANJO, M14 x 1.50 x 26
16	637-72081	1	O-RING, Cl 7, 8.1MM ID x 1.6 Thk,
17	238-6012	1	O-RING, -012, 90 Duro, .364" ID x .070" Thk,

PDF created with pdfFactory trial version www.pdffactory.com

03-07 FUEL TANK ASSEMBLY

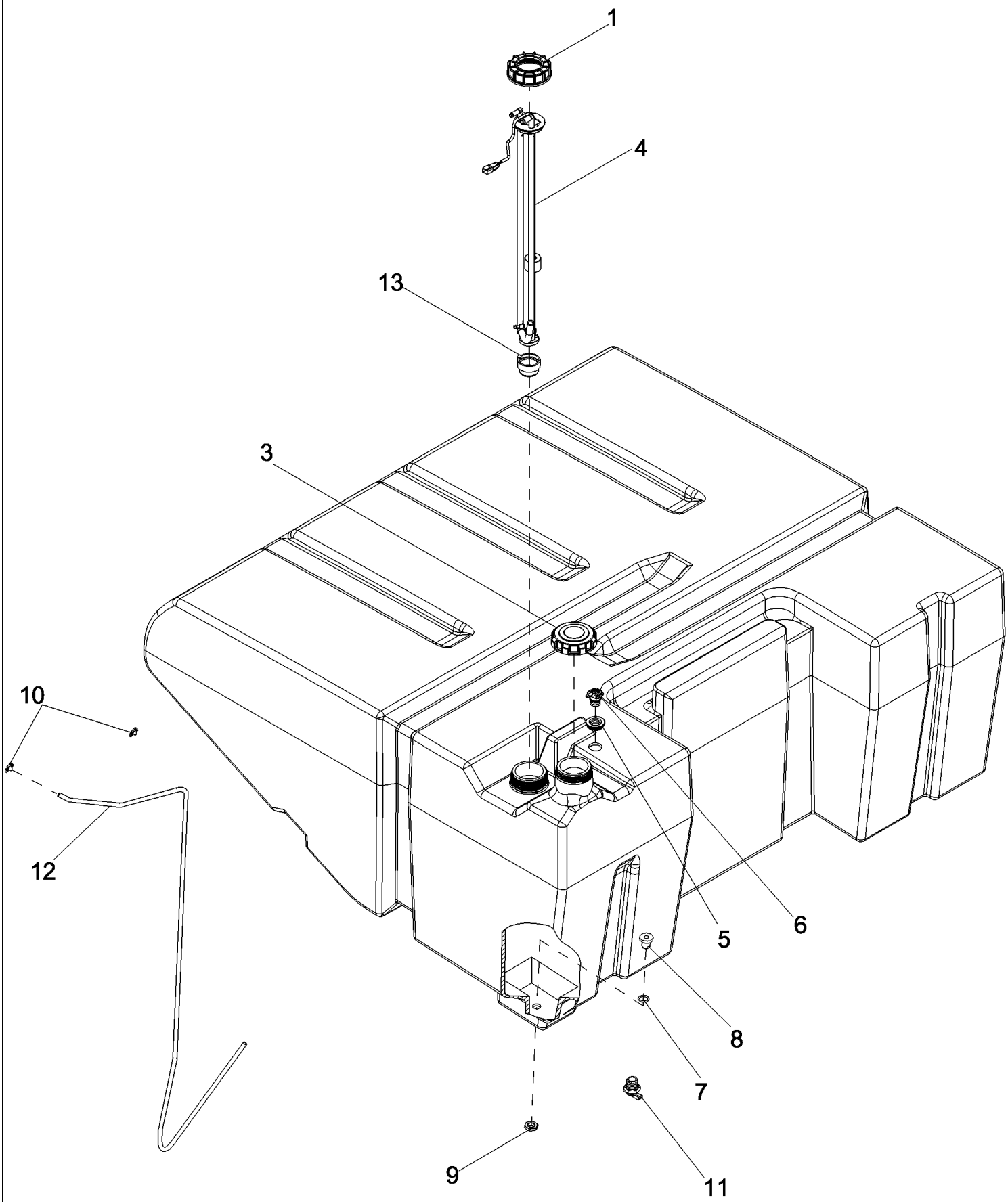

PDF created with pdfFactory trial version www.pdffactory.com

7088 AXIAL-FLOW COMBINE (EU) (4/08-)

03-07 FUEL TANK ASSEMBLY

ссылка	Номер детали	Кол-во	Описание
1	87601305	1	NUT,
2	87601309	1	TANK, 250 Gallon
3	87324388	1	CAP, FILLER, With Gasket, Fuel Tank
4	87601306	1	SENDER UNIT, Fuel Level
5	86999947	1	GROMMET, Vent
6	86999948	1	VALVE, SAFETY, Rollover
7	238-5210	1	O-RING, -210, 70 Duro, .734" ID x .139" Thk,
8	87694594	1	BOLT, Fuel Tank Drain
9	87694595	1	NUT, Fuel Tank Drain Fitting
10	214-1704	2	CLAMP, HOSE, #4, 0.25/0.62 Type M Worm,
11	86625234	1	COCK, DRAIN, Fuel Tank
12	NSS	1	NOT SERVICED SEPARATELY, Fuel Tank Vent, 1925 mm (75.79 in), Cut From 87311634
13	87494272	1	FILTER, Fuel Sender

PDF created with pdfFactory trial version www.pdffactory.com

03-08 THROTTLE CONTROL

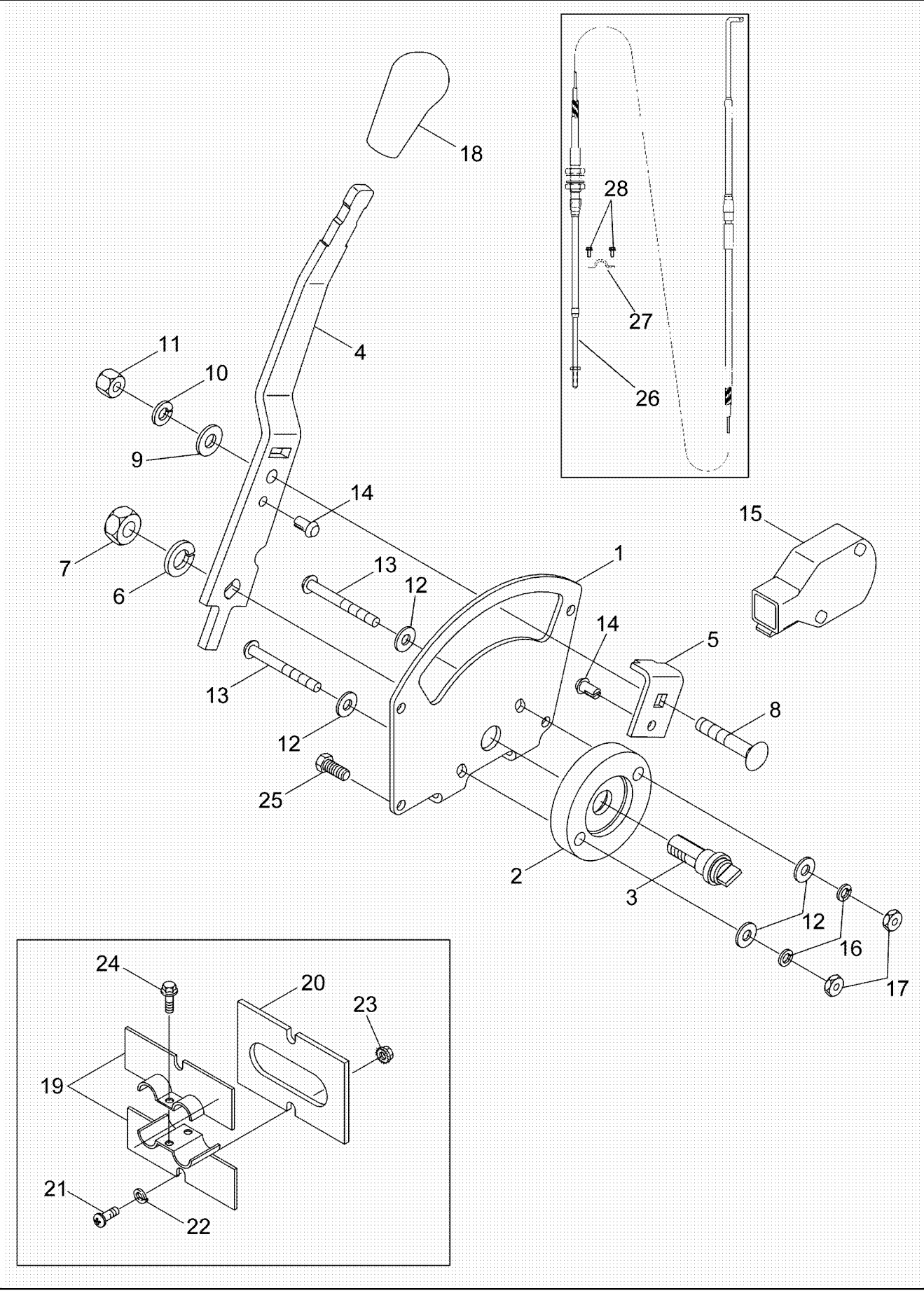

PDF created with pdfFactory trial version www.pdffactory.com

7088 AXIAL-FLOW COMBINE (EU) (4/08-)

03-08 THROTTLE CONTROL

ссылка	Номер детали	Кол-во	Описание
1	344988A1	1	PLATE, Throttle Control
2	302688A1	1	SPACER, Potentiometer
3	344990A1	1	PIN, Drive
4	344989A1	1	LEVER, Throttle
5	344991A1	1	BRACKET, Friction Glide
6	892-11010	1	WASHER, LOCK, M10,
7	829-1410	1	NUT, M10, Cl 10,
8	411-424	1	BOLT, CARRIAGE, Short NK, 1/4"-20 x 1 1/2", G2,
9	495-11028	1	WASHER, 1/4", SAE,
10	492-11025	1	WASHER, LOCK, 1/4",
11	231-1444	1	NUT, LOCK, 1/4"-20, GB,
12	495-31022	4	WASHER, #10,
13	440-11028	2	SCREW, Cross Pan Hd, #10-24 x 1 3/4",
14	259040A1	2	INSERT,
15	231426A1	1	POTENTIOMETER,
16	492-11010	2	WASHER, LOCK, #10,
17	225-14110	2	NUT, #10-24,
18	134071A1	1	KNOB,
19	119314A1	2	CLAMP,
20	119328A1	1	GASKET,
21	117067A1	2	SCREW, SELF TAPPING, Cross Pan Hd, #10-24 x 3/4",
22	492-11010	2	WASHER, LOCK, #10,
23	231-51409	2	NUT, Flg, USR, #10-24,
24	191216A1	2	SCREW, SELF TAPPING, Hex Wash Hd, #10-24 x 5/8",
25	281-1458	4	SCREW, SELF TAPPING, Hex Wash Hd, #10 x 1/2",
26	115396A1	1	CABLE, Throttle And Propulsion
27	A75815	1	CLAMP, Throttle And Propulsion Cable
28	841-4410	2	SCREW, Hex Wash Hd, M4 x 10,

PDF created with pdfFactory trial version www.pdffactory.com

03-09 FUEL WATER SEPARATOR

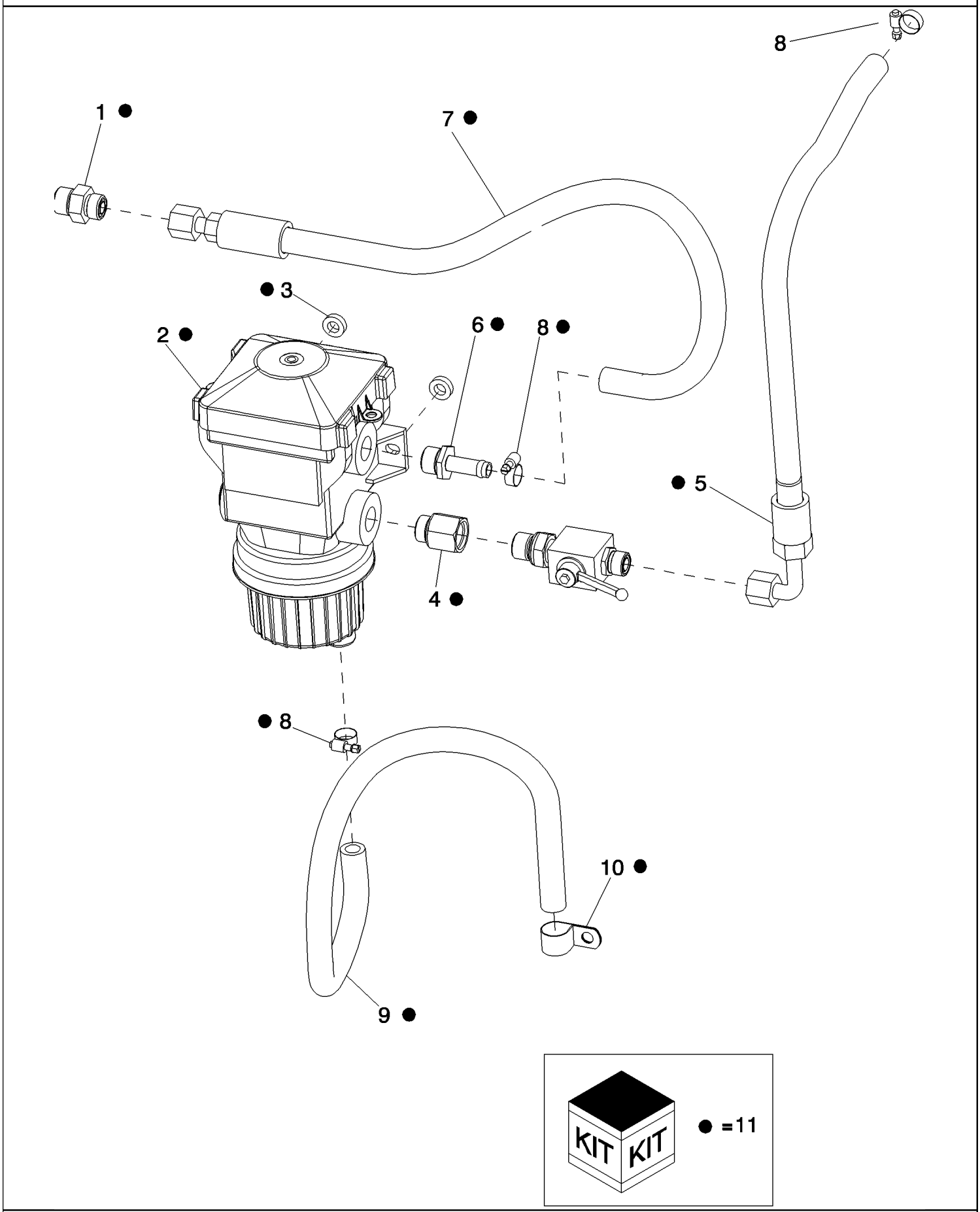

PDF created with pdfFactory trial version www.pdffactory.com

7088 AXIAL-FLOW COMBINE (EU) (4/08-)

03-09 FUEL WATER SEPARATOR

ссылка	Номер детали	Кол-во	Описание
1	201-112	1	CONNECTOR, HYD., 13/16"-16 ORFS x 7/8"-14 ORB,
2	87734479	1	SEPARATOR, Fuel Water Separator, See Figure 03-10
3	496-81023	2	WASHER,
4	87742210	1	FITTING,
5	84128449	1	HOSE ASSY., Fuel Supply Tank
6	84135083	1	FITTING,
7	84126431	1	TUBE ASSY., Fuel Supply Tank
8	214-1706	3	CLAMP, HOSE, #6, 0.44/0.78 Type M Worm,
9	84136309	1	HOSE ASSY., Fuel Water Separator Drain
10	515-23222	1	CLAMP, 7/8", Insul, 3/8" Bolt,
11	87748748	1	DIA KIT, HARVESTER, Fuel Water Separator, Inc. 1-6, 8-10

PDF created with pdfFactory trial version www.pdffactory.com

03-10 FILTER, FUEL WATER SEPARATOR

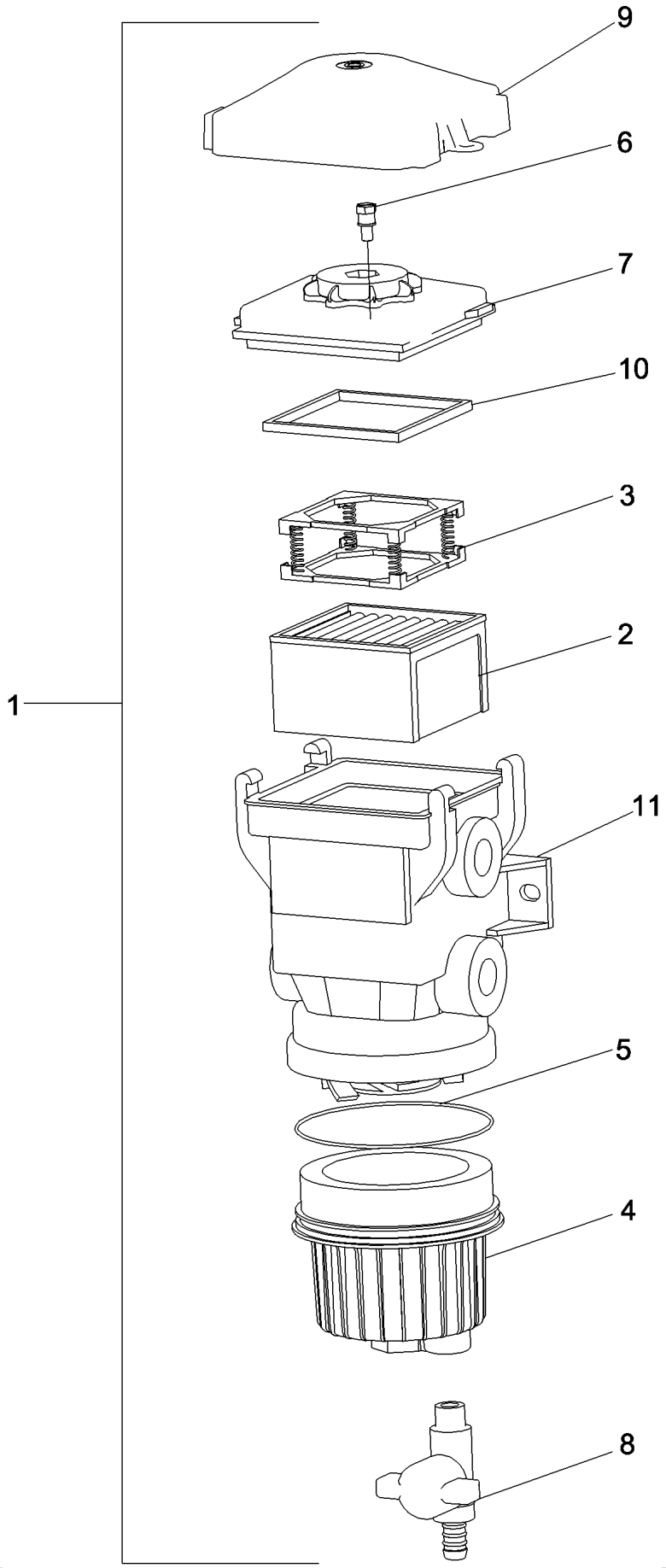

PDF created with pdfFactory trial version www.pdffactory.com

7088 AXIAL-FLOW COMBINE (EU) (4/08-)

03-10 FILTER, FUEL WATER SEPARATOR

ссылка	Номер детали	Кол-во	Описание
1	87734479	1	SEPARATOR, Fuel Water Separator, Inc. 2 - 11
2	87409379	1	FILTER, 30 Micron Fuel Strainer
3	87333679	1	SPRING, Frame Filter
4	87473304	1	BOWL, Water Sensor EVO-10
5	87473305	1	O-RING, Bowl Gasket EVO-10
6	87474698	1	VALVE BLEEDER, Bleeder EVO-10
7	87473306	1	LID, Sub Assembly Filter EVO-10
8	87473308	1	VALVE, DRAIN, Drain EVO-10
9	87474697	1	COVER, Dust EVO-10
10	87333676	1	GASKET, Top Lid Fuel Strainer
11	NSS	1	NOT SERVICED SEPARATELY, BODY, Fuel Water Separator

PDF created with pdfFactory trial version www.pdffactory.com

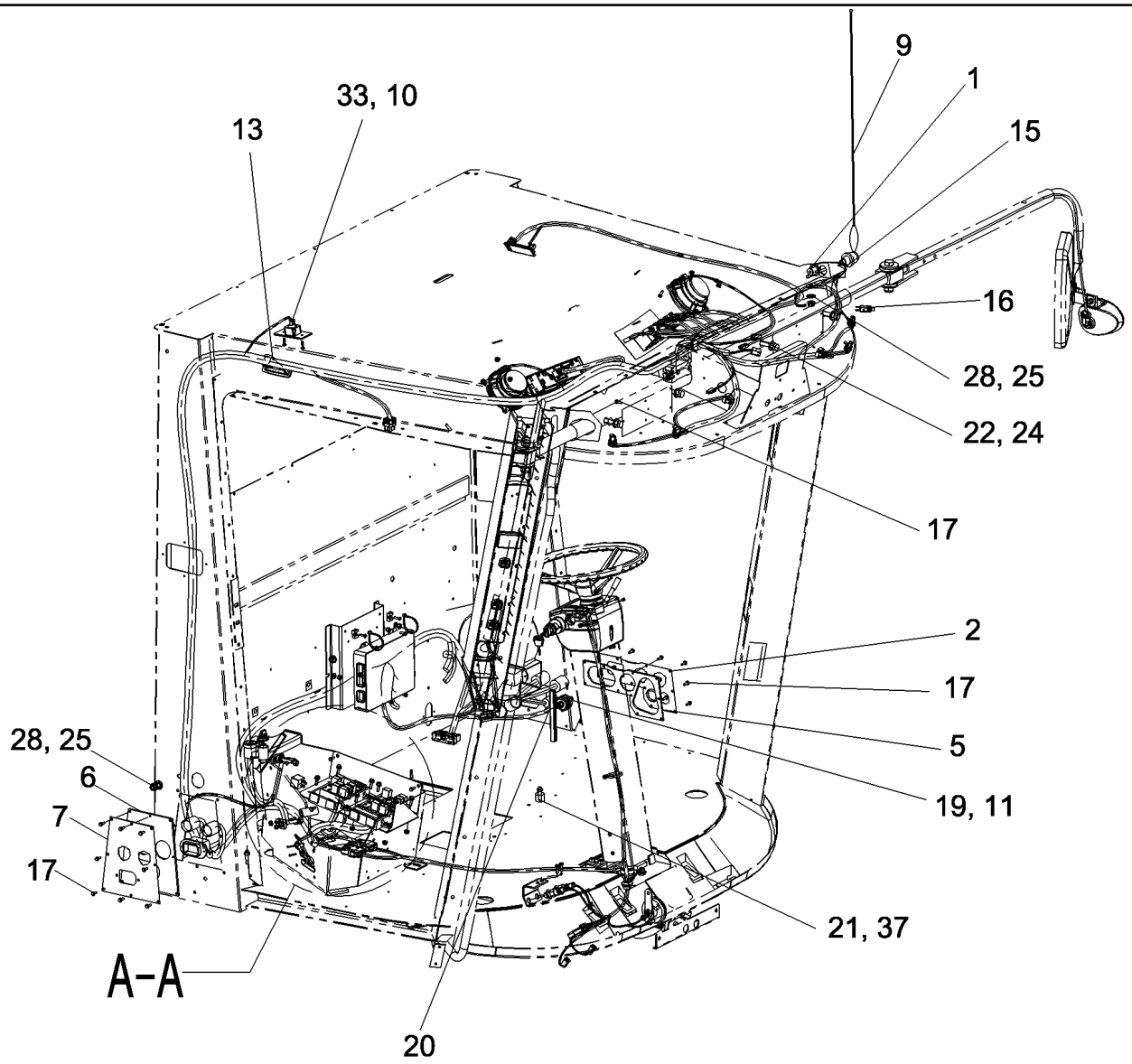

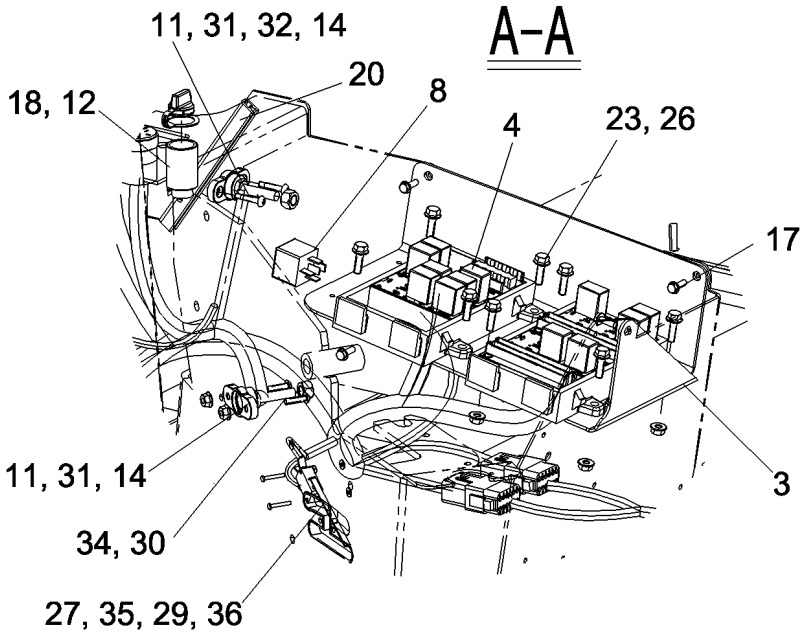

PDF created with pdfFactory trial version www.pdffactory.com

7088 AXIAL-FLOW COMBINE (EU) (4/08-)

04-01 CAB WIRING

ссылка	Номер детали	Кол-во	Описание
1	R54547	1	GROMMET, Antenna
2	87603488	1	PANEL, Electrical Access, Left Hand
3	87594437	1	Fuse/Relay
4	87414866	14	RELAY, Micro
5	87389127	1	SEAL, OIL, Electrical Access Plate, Left Hand
6	87388344	1	SEAL, Electrical Access Plate, Right Hand
7	87387874	1	PLATE, Electrical Access, Right Hand
8	87522476	1	RELAY, 70 amp Power Relay
9	97080C1	1	ANTENNA,
10	83882C91	1	LAMP, Cab Interior
11	83822C1	3	TAPE, ADHESIVE,
12	432212A1	2	LIGHTER, CIGARETTE, Power Outlet
13	429726A1	2	DOME LIGHT,
14	303717A1	2	JUNCTION BLOCK,
15	278032A1	1	STRAP, GROUND, Antenna
16	1983341C1	1	SWITCH, Door Jamb
17	191216A1	24	SCREW, SELF TAPPING, Hex Wash Hd, #10-24 x 5/8",
18	190812A1	2	COVER, Cigarette Lighter
19	190158A1	1	BLOCK, Junction
20	1327979C1	2	MOLDING,
21	878-30840	2	SET SCREW, Hex Soc, M8 x 40, Flat Pt,
22	893-11008	1	WASHER, LOCK, Ext Tooth, M8,
23	844-6020	8	BOLT, Hex Flg, M6 x 20, 8.8,
24	825-5148	1	NUT, M8, Flg Ser,
25	825-51410	3	NUT, M10, Flg Ser,
26	825-2406	8	NUT, M6 x 1, Flg, Cl 8,
27	495-31012	2	WASHER, #4,
28	493-11039	3	WASHER, LOCK, 3/8", Int-Ext Tooth,
29	463-10412	2	SCREW, Hex Hd, #4-40 x 3/4",
30	440-11012	2	SCREW, Cross Pan Hd, #10-24 x 3/4",
31	425-106	2	NUT, 3/8"-16, G5,
32	262-15516	2	SCREW, SELF TAPPING, Hex Pan Hd, #10 x 1",
33	260-16512	2	SCREW, SELF TAPPING, Cross Pan Hd, #10 x 3/4",
34	231-51409	2	NUT, Flg, USR, #10-24,
35	225-14104	2	NUT, #4-40,
36	60-6515T1	1	SWITCH, Micro
37	829-1408	2	NUT, M8, Cl 10,
38	87378009	1	RELAY, Module, Latching
39	87033643	2	SCREW, SELF TAPPING, Hex Wash Hd, #10 x 1 1/2",
40	87107420	1	GROMMET,

PDF created with pdfFactory trial version www.pdffactory.com

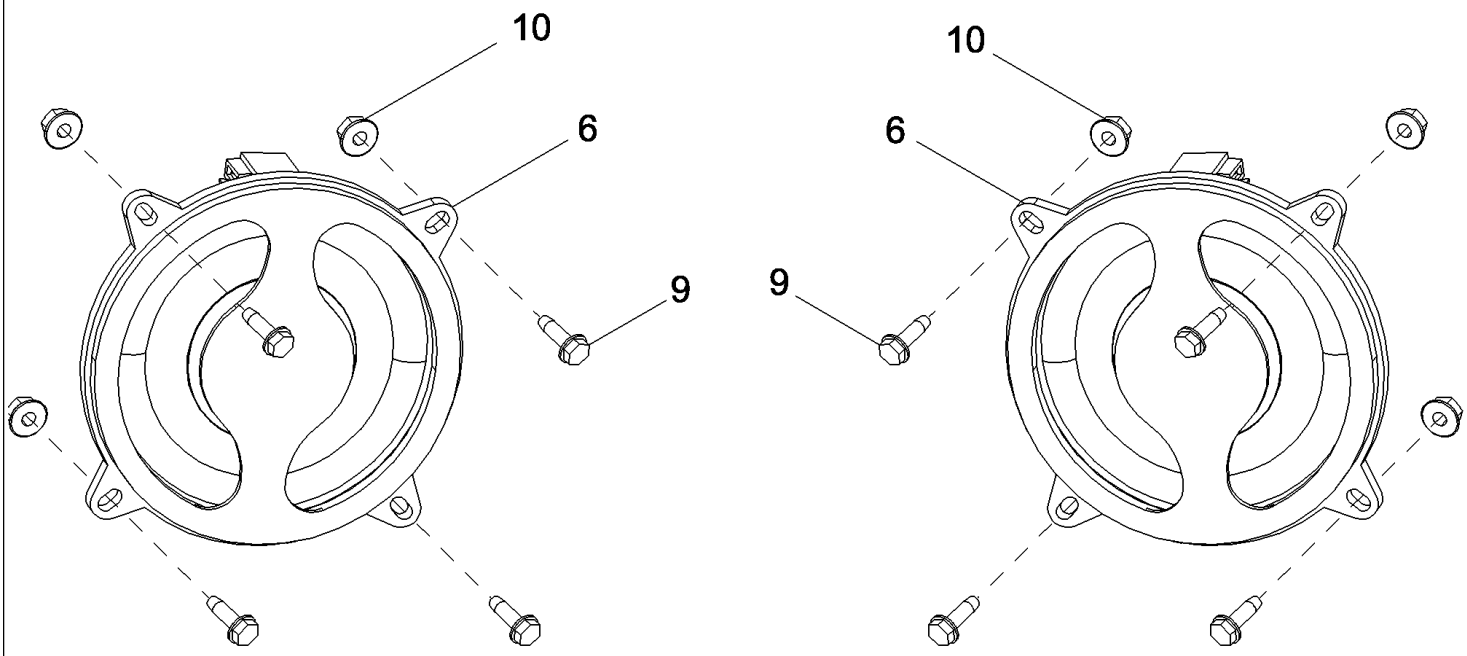

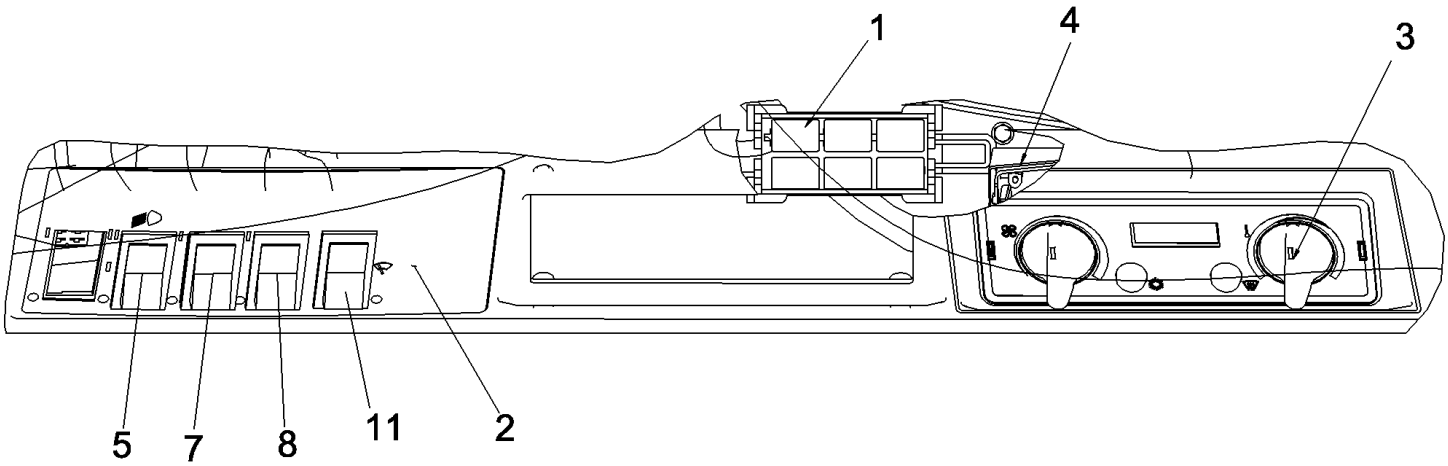

PDF created with pdfFactory trial version www.pdffactory.com

7088 AXIAL-FLOW COMBINE (EU) (4/08-)

04-02 OVERHEAD CONTROL PANEL, CAB

ссылка	Номер детали	Кол-во	Описание
1	87414866	6	RELAY, Micro
2	87682184	1	DECAL, Overhead Switch
3	87740399	1	CONTROL UNIT, Airco Automatic Temperture Control
4	87281122	1	SLEEVE,
5	87682101	1	SWITCH ASSY, Beacon Lights
6	375389A1	2	SPEAKER, 2 Way Coaxial
7	279263A1	1	SWITCH, FLASHER, Hazard/Towing
8	124095A1	1	SWITCH, LIGHTS,
9	281-53510	8	SCREW, SELF TAPPING, Hex Wash Hd, #10 x 5/8",
10	231-51409	8	NUT, Flg, USR, #10-24,
11	87447601	1	SWITCH, WINDSHIELD WIPER,

PDF created with pdfFactory trial version www.pdffactory.com

04-03(1) HARNESS, CAB

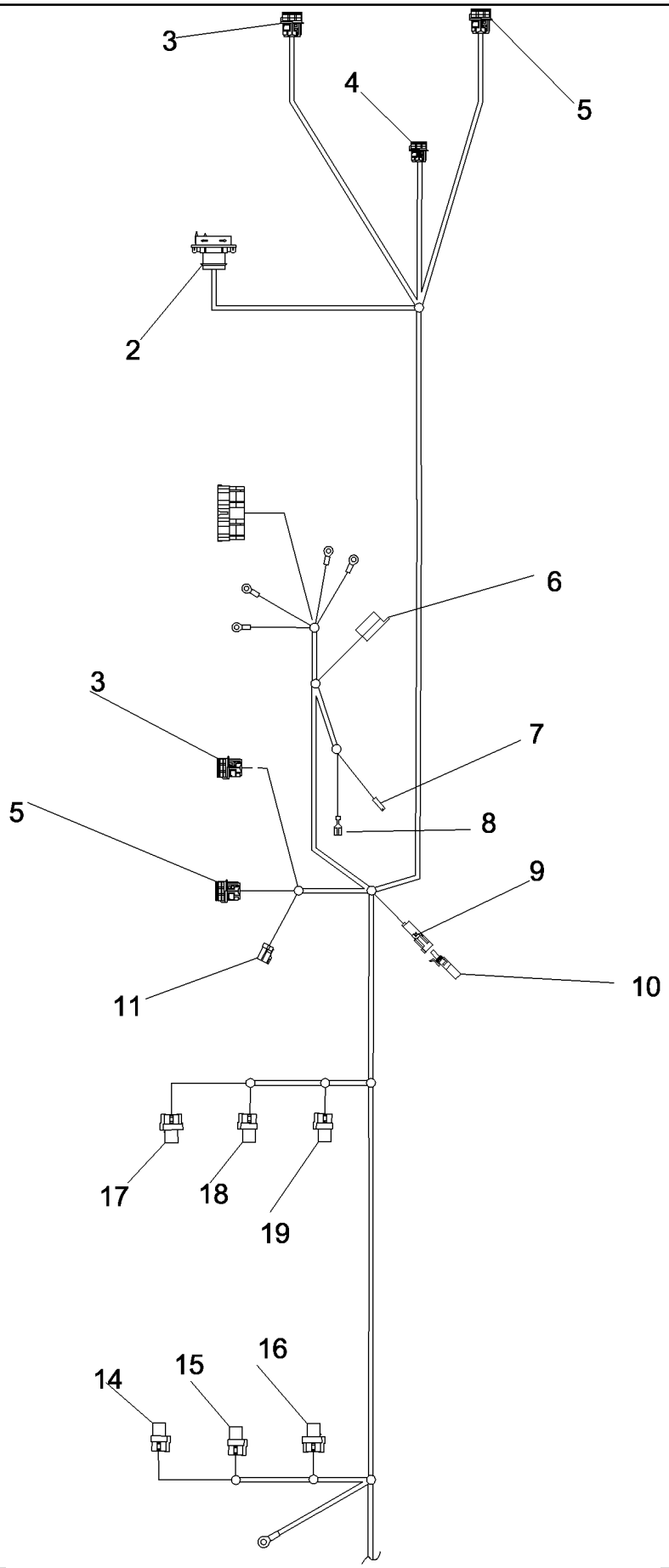

PDF created with pdfFactory trial version www.pdffactory.com

7088 AXIAL-FLOW COMBINE (EU) (4/08-)

04-03(1) HARNESS, CAB

ссылка	Номер детали	Кол-во	Описание
1	84131646	1	HARNESS, WIRE, Cab, Inc. 2 - 49
2	NSS	2	NOT SERVICED SEPARATELY, CONNECTOR, 50-Pin, C003 Left Hand Harness, C024 Right Hand Harness
3	NSS	3	NOT SERVICED SEPARATELY, CONNECTOR, 34-Pin, C001 Hydraulic Valve Block Harness, C013 Cab Harness, C004 Right Hand Cab Plate
4	NSS	1	NOT SERVICED SEPARATELY, CONNECTOR, 14-Pin, C122 Left Hand Harness
5	NSS	3	NOT SERVICED SEPARATELY, CONNECTOR, 34-Pin, C002 Front Harness, C010 Cab Harness, C023 Right Hand Harness
6	872290R1	1	CONNECTOR, ELEC, 2-Pin, C008 Pressurizer Motor
7	225159C1	2	CONNECTOR, 1-Pin, C009 Cigar Lighter, Auxiliary Power Connector
8	739065C1	2	CONNECTION, ELECTRIC, Cigar Lighter, Auxiliary Power Connector
9	245485C1	3	CONNECTOR, ELEC, 3-Pin, C012 Concave Clearance Request, C063, C075 CXCM Power
10	A187874	3	DIODE, C012 Concave Clearance Request, C063, C075 CXCM Power
11	NSS	1	NOT SERVICED SEPARATELY, CONNECTOR, 10-Pin, C011 Cab Harness
12	245488C1	5	CONNECTOR, ELEC, 6-Pin, C022 Park Brake Solenoid, C025 Rotor/Fan Speed Request, C074 Remote Sieve, C126, C127
13	131737A1	1	DIODE, C022 Park Brake Solenoid
14	87419489	1	CONNECTOR, ELEC, 26-Pin, C021
15	87419488	2	CONNECTOR, ELEC, 26-Pin, C020, C035
16	87410947	1	CONNECTOR, ELEC, 34-Pin, C019
17	87410946	1	CONNECTOR, ELEC, 34-Pin, C018
18	87410948	2	CONNECTOR, ELEC, 26-Pin, C017, C034
19	87410949	2	CONNECTOR, ELEC, 26-Pin, C016, C033
20	NSS	1	NOT SERVICED SEPARATELY, CONNECTOR, 14-Pin, C068 Steering Column
21	NSS	1	NOT SERVICED SEPARATELY, CONNECTOR, 14-Pin, C067 Steering Column
22	NSS	1	NOT SERVICED SEPARATELY, CONNECTOR, 3-Pin, C304 Steering Wheel Sensor
23	NSS	1	NOT SERVICED SEPARATELY, CONNECTOR, 6-Pin, C076 Headlamp Dipping Relay
24	NSS	1	NOT SERVICED SEPARATELY, CONNECTOR, 9-Pin, C029 Diagnostic
25	127290A1	2	DIODE, C025 Rotor/Fan Speed Request, C074 Remote Sieve
26	225316C1	1	CONNECTOR, ELEC, 2-Pin, C081 A-Post
27	3208067R1	2	CONNECTION, ELECTRIC, Right Hand Dome Light, Left Hand Dome Light
28	245442C1	1	CONNECTION, ELECTRIC, 2-Pin, C032 Projection Light
29	87410948	1	CONNECTOR, ELEC, 13-Pin, C030 CODI
30	NSS	2	NOT SERVICED SEPARATELY, CONNECTOR, 3-Pin, C014 Can 1 Passive Terminator, C077 Can 2 Passive Terminator
31	245484C1	1	CONNECTOR, ELEC, 3-Pin, C082 Auxiliary Power
32	198718A1	1	CONNECTOR, 32-Pin, C056 Automatic Temperture Control
33	739070C1	2	CONNECTOR, C143, C053
34	631801C1	2	CONNECTION, C144, C052
35	292494A1	1	FITTING, 8-Pin, C048 Radio
36	292495A1	1	FITTING, 8-Pin, C047 Radio

PDF created with pdfFactory trial version www.pdffactory.com

ссылка	Номер детали	Кол-во	Описание
37	NSS	6	NOT SERVICED SEPARATELY, CONNECTOR, 8-Pin, C044 Field Light Switch, C040 Beacon Switch, C015 Grain Tank Covers, C042 Hazard/Towing Switch, C046 Wiper/Washer Switch, C146 HID Light Switch
38	225250C1	6	CONNECTOR, ELECTRIC, 2-Pin, C043, C039, C054, C041,C045, C147
39	195552A1	2	FITTING, 2-Pin, C036 Left Hand Speaker, C057 Right Hand Speaker
40	282459A1	4	TERMINAL CONNECTOR, Front Beacon
41	NSS	6	NOT SERVICED SEPARATELY, CONNECTOR, 2-Pin, C062 Right Hand Work Light, C061 Right Hand Center Work Light, C006 Right Hand Inner Work Light, C066 Left Hand Work Light, C065 Left Hand Center Work Light, C007 Left Hand Inner Work Light
42	NSS	2	NOT SERVICED SEPARATELY, CONNECTOR, 2-Pin, C072 Left Hand Side Flood, C073 Right Hand Side Flood
43	NSS	1	NOT SERVICED SEPARATELY, CONNECTOR, 2-Pin, C145 HID Distance Lights
44	NSS	4	NOT SERVICED SEPARATELY, CONNECTOR, 2-Pin, Door Jamb Switch, 3rd Gear Lockout
45	125197C1	2	3-Pin, C064 HI/LO Beam Left Hand, C060 HI/LO Beam Right Hand
46	225217C1	1	CONNECTOR, 4-Pin, C058 Deluxe Wiper Motor
47	NSS	1	NOT SERVICED SEPARATELY, 1-Pin, C375 Separator
48	NSS	1	NOT SERVICED SEPARATELY, CONNECTOR, 10-Pin, C027 RS232 From Receiver
49	NSS	1	NOT SERVICED SEPARATELY, CONNECTOR, 10-Pin, C026 RS232 To Display

PDF created with pdfFactory trial version www.pdffactory.com

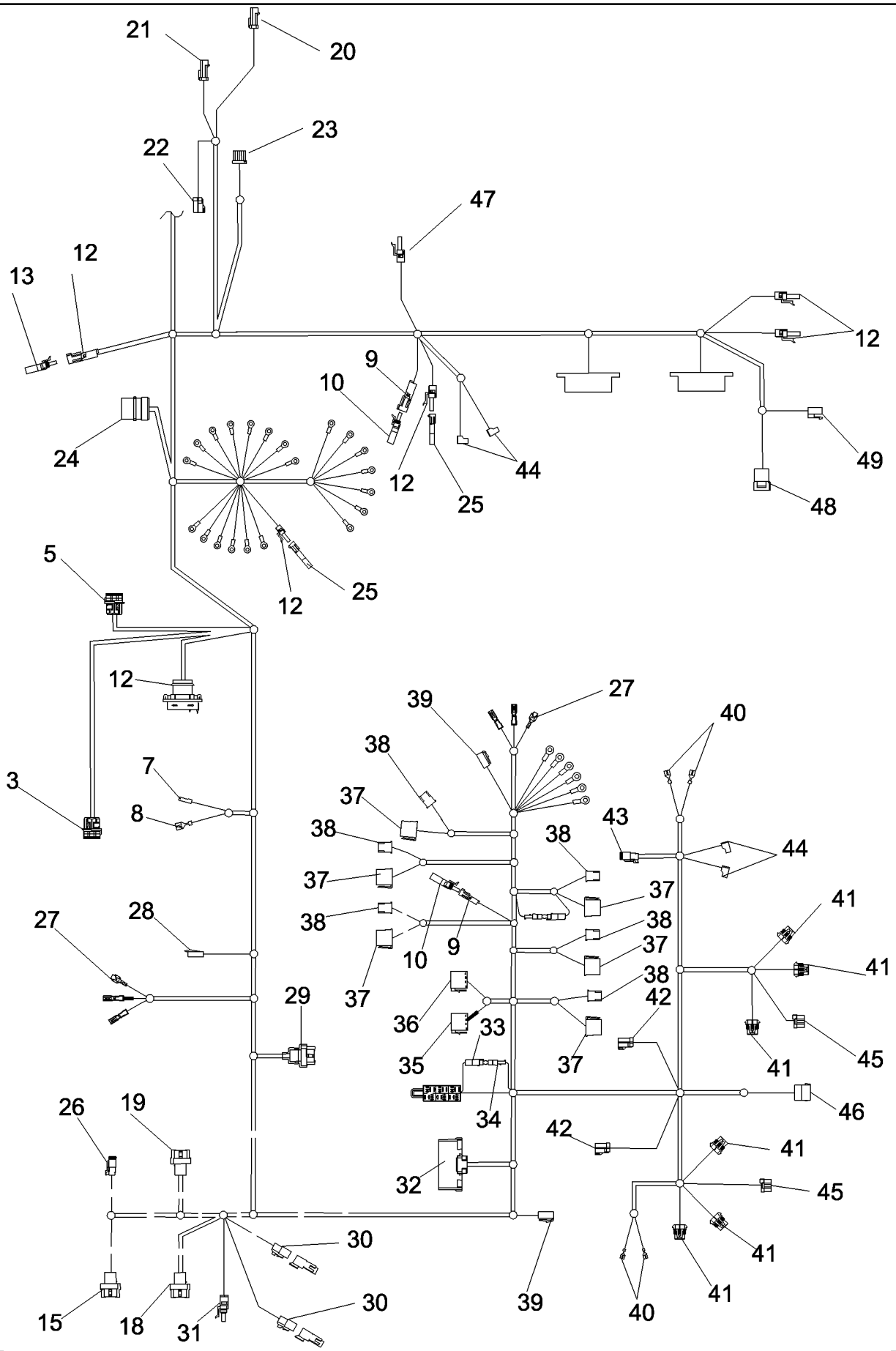

PDF created with pdfFactory trial version www.pdffactory.com

ссылка	Номер детали	Кол-во	Описание
1	84131646	1	HARNESS, WIRE, Cab, Inc. 2 - 49
2	NSS	2	NOT SERVICED SEPARATELY, CONNECTOR, 50-Pin, C003 Left Hand Harness, C024 Right Hand Harness
3	NSS	3	NOT SERVICED SEPARATELY, CONNECTOR, 34-Pin, C001 Hydraulic Valve Block Harness, C013 Cab Harness, C004 Right Hand Cab Plate
4	NSS	1	NOT SERVICED SEPARATELY, CONNECTOR, 14-Pin, C122 Left Hand Harness
5	NSS	3	NOT SERVICED SEPARATELY, CONNECTOR, 34-Pin, C002 Front Harness, C010 Cab Harness, C023 Right Hand Harness
6	872290R1	1	CONNECTOR, ELEC, 2-Pin, C008 Pressurizer Motor
7	225159C1	2	CONNECTOR, 1-Pin, C009 Cigar Lighter, Auxiliary Power Connector
8	739065C1	2	CONNECTION, ELECTRIC, Cigar Lighter, Auxiliary Power Connector
9	245485C1	3	CONNECTOR, ELEC, 3-Pin, C012 Concave Clearance Request, C063, C075 CXCM Power
10	A187874	3	DIODE, C012 Concave Clearance Request, C063, C075 CXCM Power
11	NSS	1	NOT SERVICED SEPARATELY, CONNECTOR, 10-Pin, C011 Cab Harness
12	245488C1	5	CONNECTOR, ELEC, 6-Pin, C022 Park Brake Solenoid, C025 Rotor/Fan Speed Request, C074 Remote Sieve, C126, C127
13	131737A1	1	DIODE, C022 Park Brake Solenoid
14	87419489	1	CONNECTOR, ELEC, 26-Pin, C021
15	87419488	2	CONNECTOR, ELEC, 26-Pin, C020, C035
16	87410947	1	CONNECTOR, ELEC, 34-Pin, C019
17	87410946	1	CONNECTOR, ELEC, 34-Pin, C018
18	87410948	2	CONNECTOR, ELEC, 26-Pin, C017, C034
19	87410949	2	CONNECTOR, ELEC, 26-Pin, C016, C033
20	NSS	1	NOT SERVICED SEPARATELY, CONNECTOR, 14-Pin, C068 Steering Column
21	NSS	1	NOT SERVICED SEPARATELY, CONNECTOR, 14-Pin, C067 Steering Column
22	NSS	1	NOT SERVICED SEPARATELY, CONNECTOR, 3-Pin, C304 Steering Wheel Sensor
23	NSS	1	NOT SERVICED SEPARATELY, CONNECTOR, 6-Pin, C076 Headlamp Dipping Relay
24	NSS	1	NOT SERVICED SEPARATELY, CONNECTOR, 9-Pin, C029 Diagnostic
25	127290A1	2	DIODE, C025 Rotor/Fan Speed Request, C074 Remote Sieve
26	225316C1	1	CONNECTOR, ELEC, 2-Pin, C081 A-Post
27	3208067R1	2	CONNECTION, ELECTRIC, Right Hand Dome Light, Left Hand Dome Light
28	245442C1	1	CONNECTION, ELECTRIC, 2-Pin, C032 Projection Light
29	87410948	1	CONNECTOR, ELEC, 13-Pin, C030 CODI
30	NSS	2	NOT SERVICED SEPARATELY, CONNECTOR, 3-Pin, C014 Can 1 Passive Terminator, C077 Can 2 Passive Terminator
31	245484C1	1	CONNECTOR, ELEC, 3-Pin, C082 Auxiliary Power
32	198718A1	1	CONNECTOR, 32-Pin, C056 Automatic Temperture Control
33	739070C1	2	CONNECTOR, C143, C053
34	631801C1	2	CONNECTION, C144, C052
35	292494A1	1	FITTING, 8-Pin, C048 Radio
36	292495A1	1	FITTING, 8-Pin, C047 Radio

PDF created with pdfFactory trial version www.pdffactory.com

ссылка	Номер детали	Кол-во	Описание
37	NSS	6	NOT SERVICED SEPARATELY, CONNECTOR, 8-Pin, C044 Field Light Switch, C040 Beacon Switch, C015 Grain Tank Covers, C042 Hazard/Towing Switch, C046 Wiper/Washer Switch, C146 HID Light Switch
38	225250C1	6	CONNECTOR, ELECTRIC, 2-Pin, C043, C039, C054, C041,C045, C147
39	195552A1	2	FITTING, 2-Pin, C036 Left Hand Speaker, C057 Right Hand Speaker
40	282459A1	4	TERMINAL CONNECTOR, Front Beacon
41	NSS	6	NOT SERVICED SEPARATELY, CONNECTOR, 2-Pin, C062 Right Hand Work Light, C061 Right Hand Center Work Light, C006 Right Hand Inner Work Light, C066 Left Hand Work Light, C065 Left Hand Center Work Light, C007 Left Hand Inner Work Light
42	NSS	2	NOT SERVICED SEPARATELY, CONNECTOR, 2-Pin, C072 Left Hand Side Flood, C073 Right Hand Side Flood
43	NSS	1	NOT SERVICED SEPARATELY, CONNECTOR, 2-Pin, C145 HID Distance Lights
44	NSS	4	NOT SERVICED SEPARATELY, CONNECTOR, 2-Pin, Door Jamb Switch, 3rd Gear Lockout
45	125197C1	2	3-Pin, C064 HI/LO Beam Left Hand, C060 HI/LO Beam Right Hand
46	225217C1	1	CONNECTOR, 4-Pin, C058 Deluxe Wiper Motor
47	NSS	1	NOT SERVICED SEPARATELY, 1-Pin, C375 Separator
48	NSS	1	NOT SERVICED SEPARATELY, CONNECTOR, 10-Pin, C027 RS232 From Receiver
49	NSS	1	NOT SERVICED SEPARATELY, CONNECTOR, 10-Pin, C026 RS232 To Display

PDF created with pdfFactory trial version www.pdffactory.com

04-04 POTENTIOMETER, CONCAVE POSITION - MOUNTING

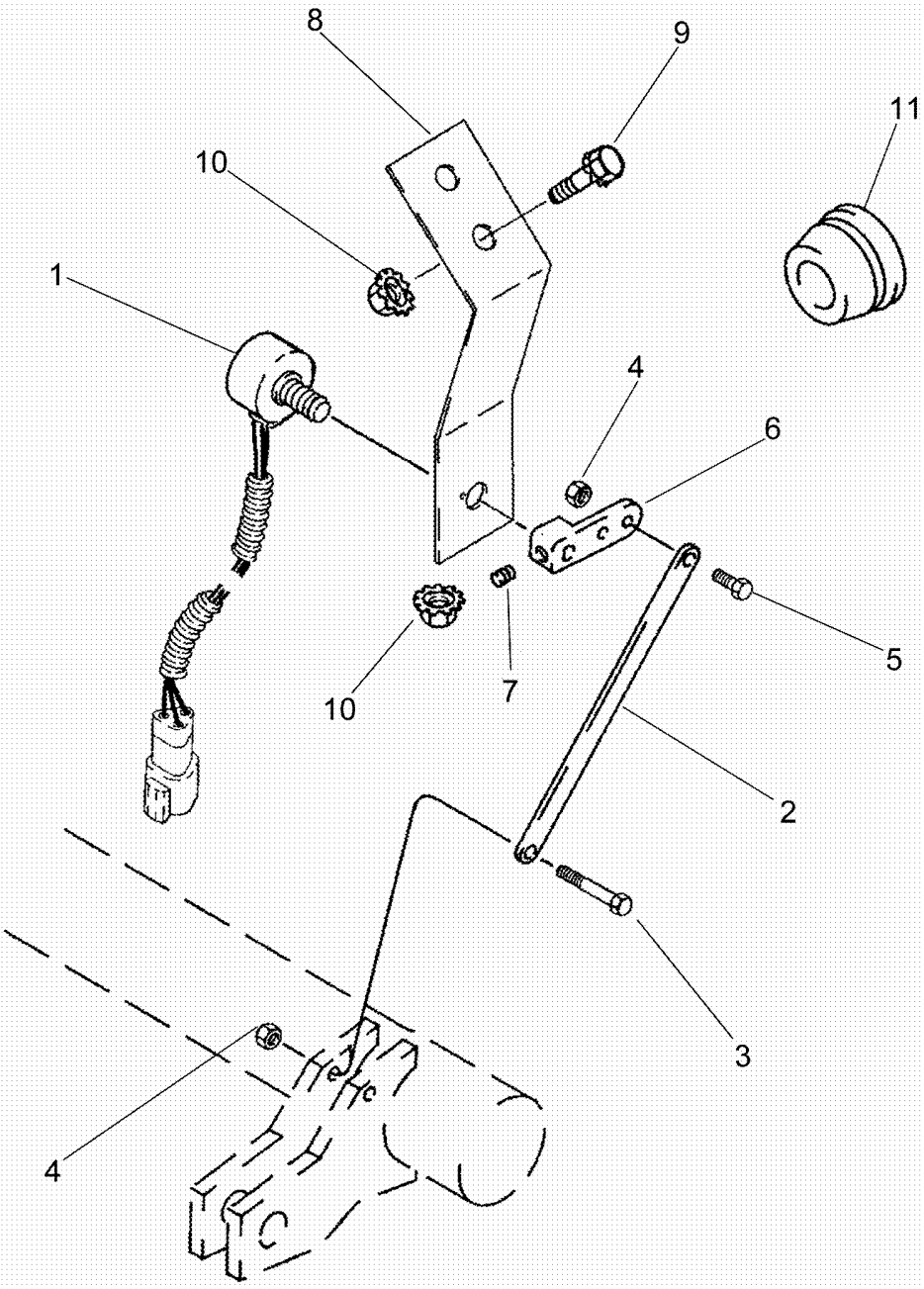

PDF created with pdfFactory trial version www.pdffactory.com

7088 AXIAL-FLOW COMBINE (EU) (4/08-)

04-04 POTENTIOMETER, CONCAVE POSITION - MOUNTING

ссылка	Номер детали	Кол-во	Описание
1	122756A3	1	POTENTIOMETER, 1K, Concave Position
2	181760A2	1	LEVER,
3	463-11024	1	SCREW, Hex Hd, #10-24 x 1 1/2",
4	230-42409	2	NUT, LOCK, #10-24, GA,
5	463-11010	1	SCREW, Hex Hd, #10-24 x 5/8",
6	131175A1	1	ARM,
7	483-1084	1	SET SCREW, Hex Soc, #8-32 x 1/4",
8	87685419	1	BRACKET,
9	409-7512	2	BOLT, Hex Flg, 5/16"-18 x 3/4", Serr,
10	231-5145	2	NUT, Flg, USR, 5/16"-18,
11	198824C1	1	GROMMET, 1/2 ID

PDF created with pdfFactory trial version www.pdffactory.com

04-05 HARNESS, STEERING COLUMN

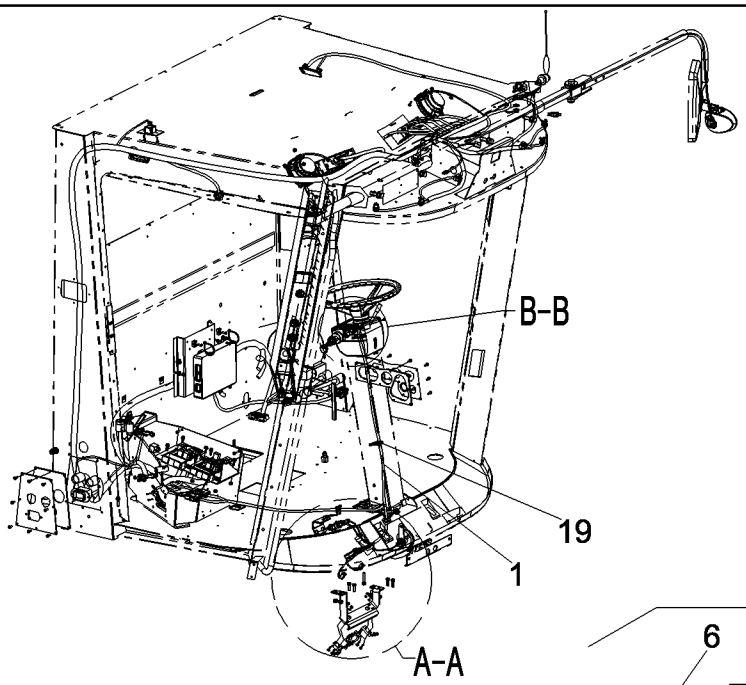

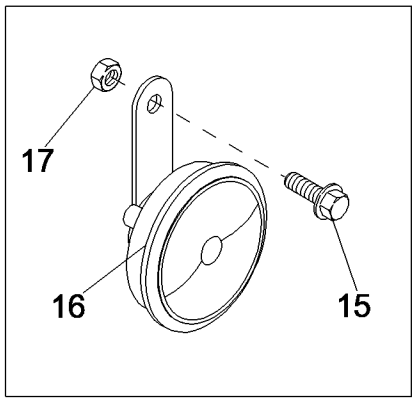

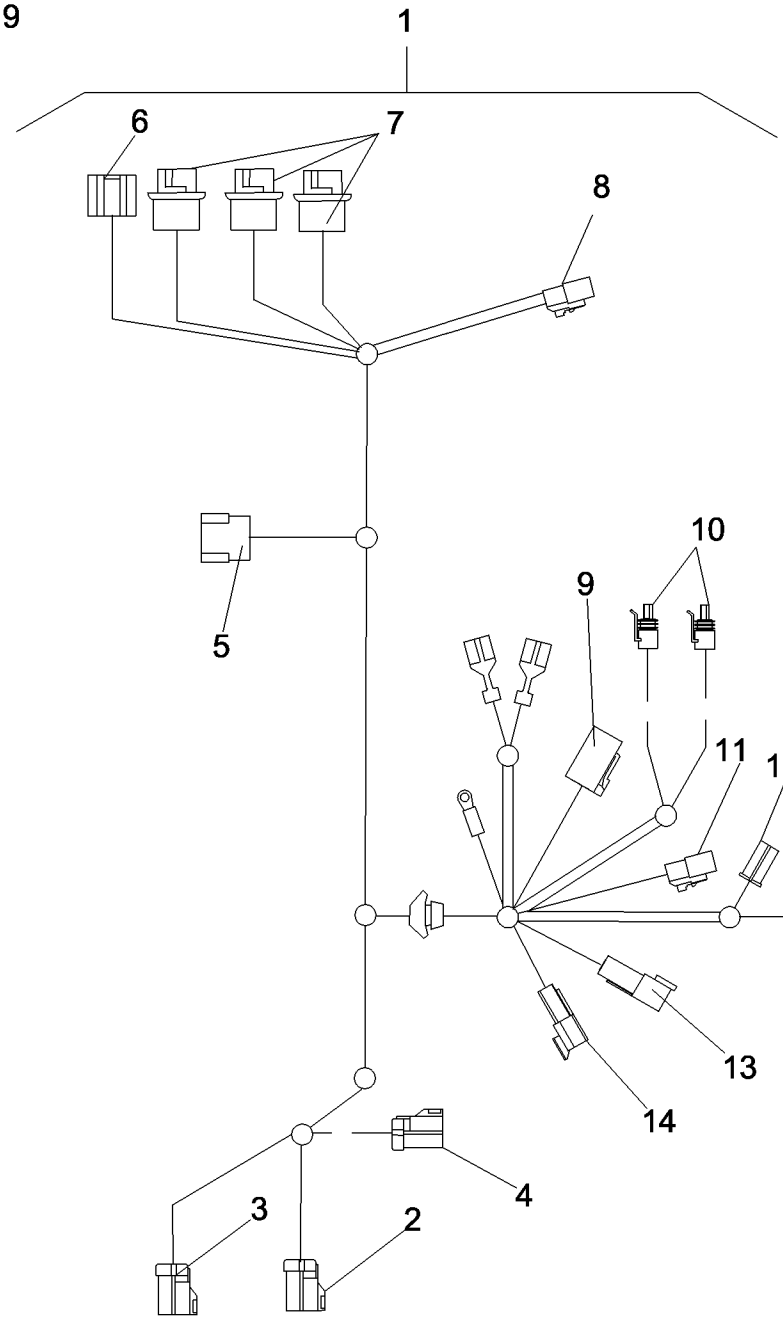

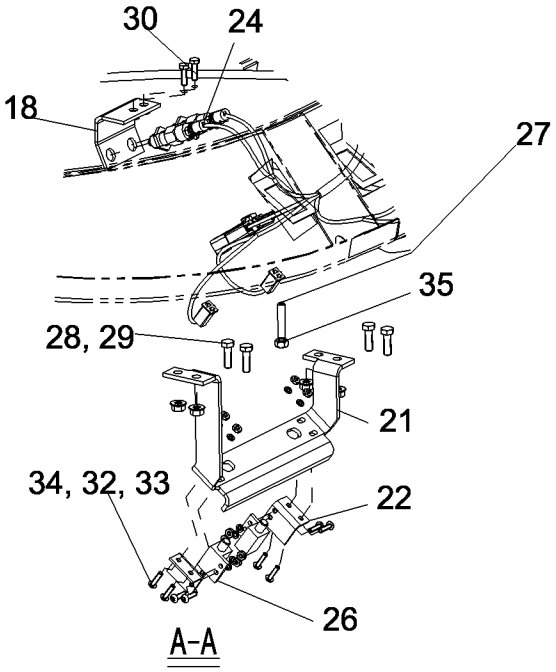

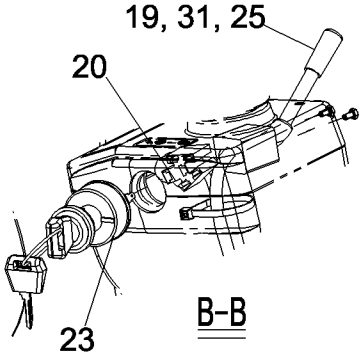

PDF created with pdfFactory trial version www.pdffactory.com

7088 AXIAL-FLOW COMBINE (EU) (4/08-)

04-05 HARNESS, STEERING COLUMN

ссылка	Номер детали	Кол-во	Описание
1	84131653	1	HARNESS, WIRE, Steering Column, Inc. 2 - 14
2	NSS	1	NOT SERVICED SEPARATELY, CONNECTOR, 14-Pin, C067 Cab Harness
3	NSS	1	NOT SERVICED SEPARATELY, CONNECTOR, 3-Pin, C304
4	NSS	1	NOT SERVICED SEPARATELY, CONNECTOR, 14-Pin, C068 Cab Harness
5	NSS	1	NOT SERVICED SEPARATELY, CONNECTOR, 6-Pin, C137 Turn Signal Switch
6	225253C1	1	CONNECTOR, 6-Pin, C138
7	NSS	3	NOT SERVICED SEPARATELY, CONNECTOR, 2-Pin, C139 Right Hand Indicator, C140 Headlights High Beam Indicator, C141 Left Hand Indicator
8	87428139	1	3-Pin, C380
9	NSS	1	NOT SERVICED SEPARATELY, CONNECTOR, 2-Pin, C130
10	194788A1	2	CONNECTOR, 2-POLE, C135, C136 Brake Light Switches
11	NSS	1	NOT SERVICED SEPARATELY, CONNECTOR, 3-Pin, C142
12	NSS	2	NOT SERVICED SEPARATELY, CONNECTOR, 2-Pin, C133 Emergency Brake Switch Left Pedal, C134 Emergency Brake Switch Right Pedal
13	NSS	1	NOT SERVICED SEPARATELY, CONNECTOR, 4-Pin, C132 Platform Harness
14	NSS	1	NOT SERVICED SEPARATELY, CONNECTOR, 3-Pin, C131 Platform Harness
15	614-6020	1	BOLT, Hex, M6 x 20, 8.8,
16	237582A1	1	HORN,
17	825-5146	1	NUT, M6, Flg Ser,
18	87389572	1	BRACKET, Brake Light Switch
19	L11541	2	STRAP, CABLE,
20	D71346	2	LAMP, TAIL, Backlighting
21	296643A1	1	SUPPORT, Brake Switch
22	296466A1	2	BRACKET, Switch Mounting
23	282775A1	1	SWITCH, IGNITION, With Padded Keys
24	177499A2	2	SWITCH, Plunger
25	1500137C2	1	SWITCH, FLASHER, Warn-Dip-Horn
26	127286A1	2	SWITCH, Brake Light
27	878-30840	1	SET SCREW, Hex Soc, M8 x 40, Flat Pt,
28	825-5148	4	NUT, M8, Flg Ser,
29	614-8025	4	BOLT, Hex, M8 x 25, 8.8,
30	614-6020	2	BOLT, Hex, M6 x 20, 8.8,
31	614-4008	2	BOLT, Hex, M4 x 8, 8.8, Full Thd,
32	492-11010	8	WASHER, LOCK, #10,
33	440-11012	8	SCREW, Cross Pan Hd, #10-24 x 3/4",
34	225-14110	8	NUT, #10-24,
35	829-1408	1	NUT, M8, Cl 10,

PDF created with pdfFactory trial version www.pdffactory.com

04-06 HARNESS, TIER III ENGINE

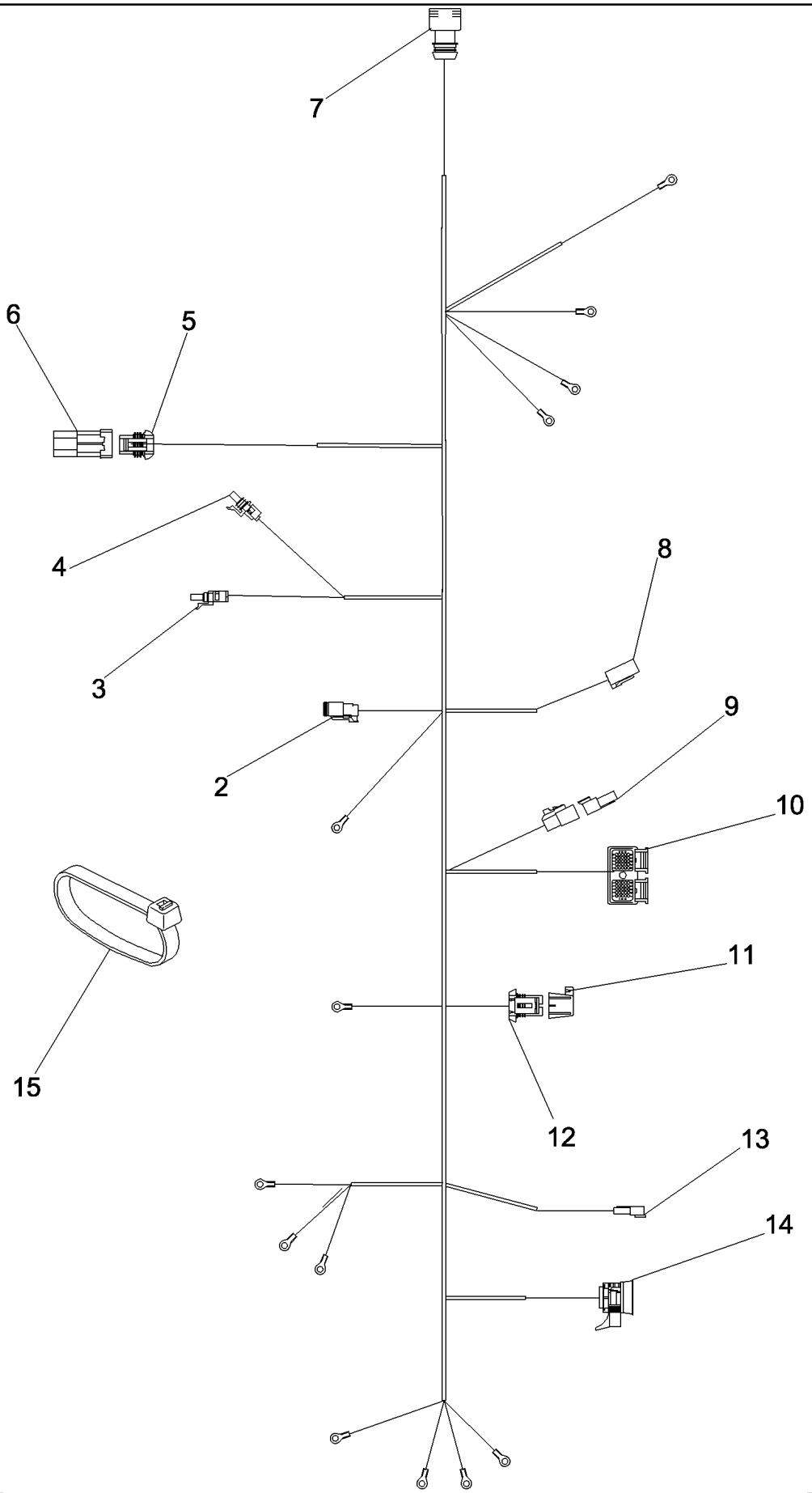

PDF created with pdfFactory trial version www.pdffactory.com

7088 AXIAL-FLOW COMBINE (EU) (4/08-)

04-06 HARNESS, TIER III ENGINE

ссылка	Номер детали	Кол-во	Описание
1	87755466	1	HARNESS, Tier III Engine, Inc. 2 - 14
2	225295C1	1	CONNECTOR, ELEC, C360, 3-Pin, To Grid Relay
3	245482C1	1	CONNECTOR, ELEC, C311, 2-Pin, AC High Pressure
4	245480C1	1	CONNECTOR, ELEC, C310, 1-Pin, AC Compressor Clutch
5	182069A1	1	CONNECTOR, C312, 2-Pin, Beacon
6	182068A1	1	CONNECTOR, C312, Cap, Beacon
7	291718A1	1	CONNECTOR, ELEC, C309, 2-Pin, Air Filter Restriction
8	NS	1	NOT SERVICED, CONNECTOR, C359, 4-Pin
9	NS	1	NOT SERVICED, CONNECTOR, C307, 3-Pin
10	NS	1	NOT SERVICED, CONNECTOR, C358, 50-Pin
11	NS	1	NOT SERVICED, FUSE COVER, C361
12	NS	1	NOT SERVICED, CONNECTOR, C361, 30 amp Auto Fuse
13	NS	1	NOT SERVICED, CONNECTOR, C357, 2-Pin
14	NS	1	NOT SERVICED, CONNECTOR, C182, 34-Pin
15	86566989	3	STRAP, CABLE, M4.75 x 190.5 L,

PDF created with pdfFactory trial version www.pdffactory.com

04-07 HARNESS, GRID HEATER

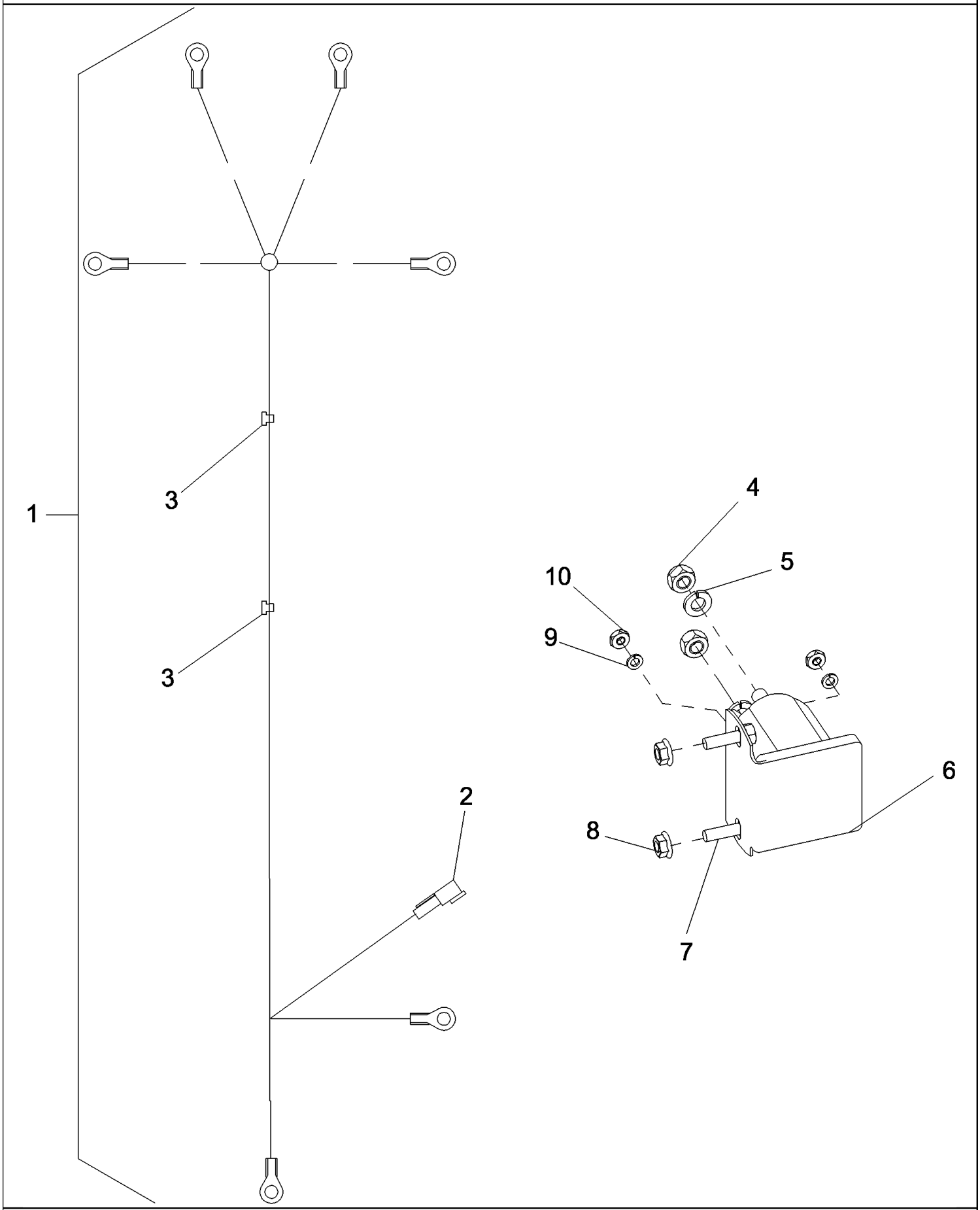

PDF created with pdfFactory trial version www.pdffactory.com

7088 AXIAL-FLOW COMBINE (EU) (4/08-)

04-07 HARNESS, GRID HEATER

ссылка	Номер детали	Кол-во	Описание
1	87302567	1	HARNESS, WIRE, Grid Heater
2	225294C1	1	CONNECTOR, ELEC, 3-Pin, Grid Heater
3	86566989	2	STRAP, CABLE, M4.75 x 190.5 L,
4	425-105	2	NUT, 5/16"-18, G5,
5	492-11031	2	WASHER, LOCK, 5/16",
6	87406968	1	SWITCH, SOLENOID, Grid Heater
7	87675531	2	BOLT,
8	86050300	2	NUT, M6 x 1, Flg, Cl10,
9	492-11010	2	WASHER, LOCK, #10,
10	225-14210	2	NUT, #10-32,

PDF created with pdfFactory trial version www.pdffactory.com

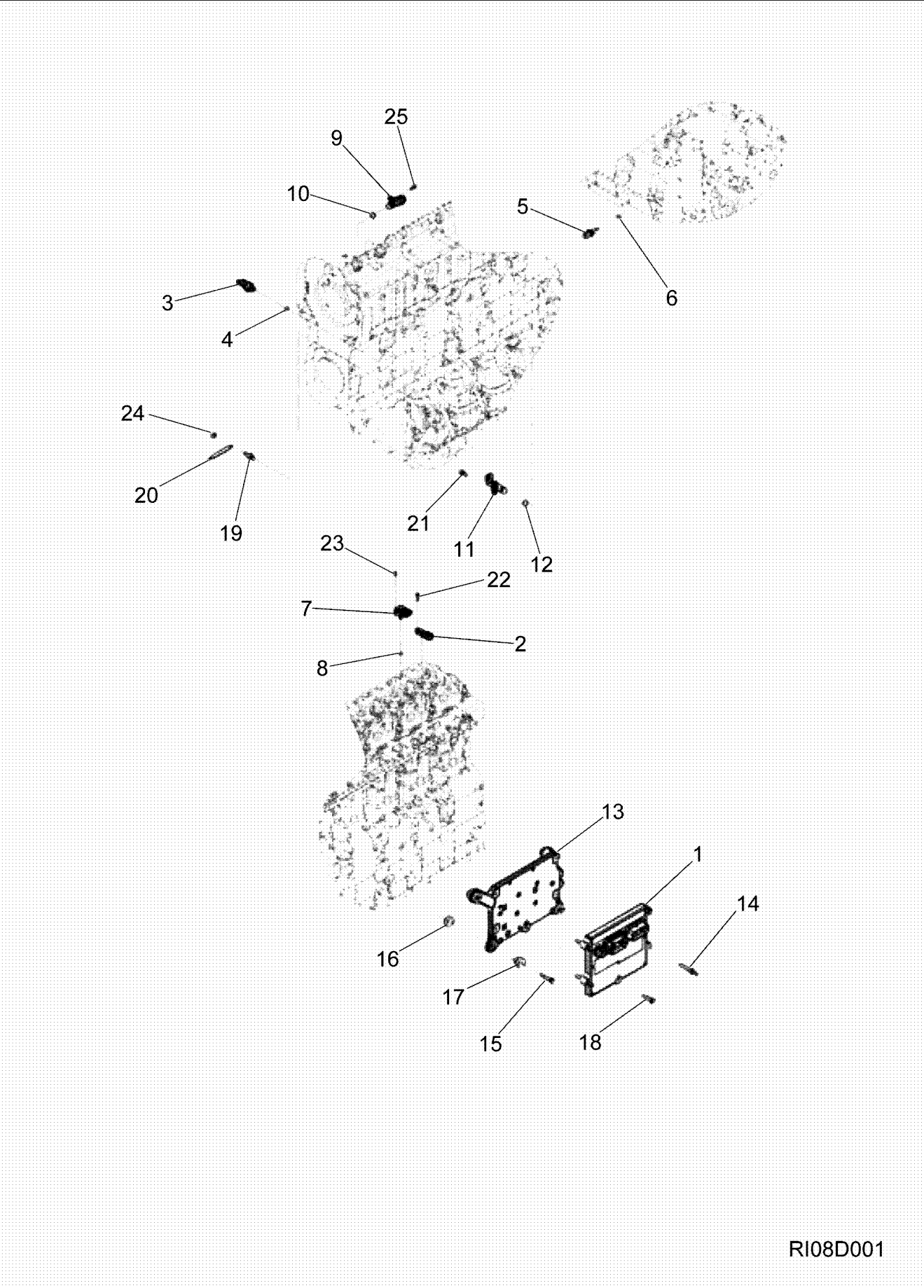

PDF created with pdfFactory trial version www.pdffactory.com

7088 AXIAL-FLOW COMBINE (EU) (4/08-)

04-08 MODULE, ENGINE CONTROL

ссылка	Номер детали	Кол-во	Описание
1	87342193	1	MODULE, Electronic Control
2	87341871	1	SENSOR, Pressure
3	87568842	1	SENSOR, Pressure, Inc. 4
4	87385019	1	O-RING, 11.3 ID x 2.2 mm
5	87470173	1	SENSOR, Temperature, Inc. 6
6	87385019	1	O-RING, 11.3 ID x 2.2 mm
7	87584643	1	SENSOR, Inc. 8
8	87342065	1	SEAL, RUBBER, 11.3 ID x 2.2 mm
9	87352952	1	SENSOR, Position, Inc. 10
10	87352938	1	O-RING,
11	87341787	1	SENSOR, Inc. 12
12	87352938	1	O-RING,
13	87341857	1	COOLER, Fuel
14	J944816	3	SCREW,
15	845-8045	4	BOLT, Hex Flg, M8 x 45, 8.8,
16	87341822	4	ISOLATOR,
17	87341823	4	ISOLATOR,
18	845-8040	2	BOLT, Hex Flg, M8 x 40, 8.8,
19	87341816	1	SCREW,
20	87341820	1	STRAP, GROUND,
21	845-8020	1	BOLT, Hex Flg, M8 x 20, 8.8, Full Thd,
22	J920854	1	SCREW, Hex Hd, M5 x .8 x 20, w/LW,
23	87341845	1	SCREW,
24	J900589	1	NUT, M8 x 1.25
25	845-6015	1	BOLT, Hex Flg, M6 x 15, 8.8, Full Thd,

PDF created with pdfFactory trial version www.pdffactory.com

04-09 HARNESS, ENGINE CONTROL MODULE

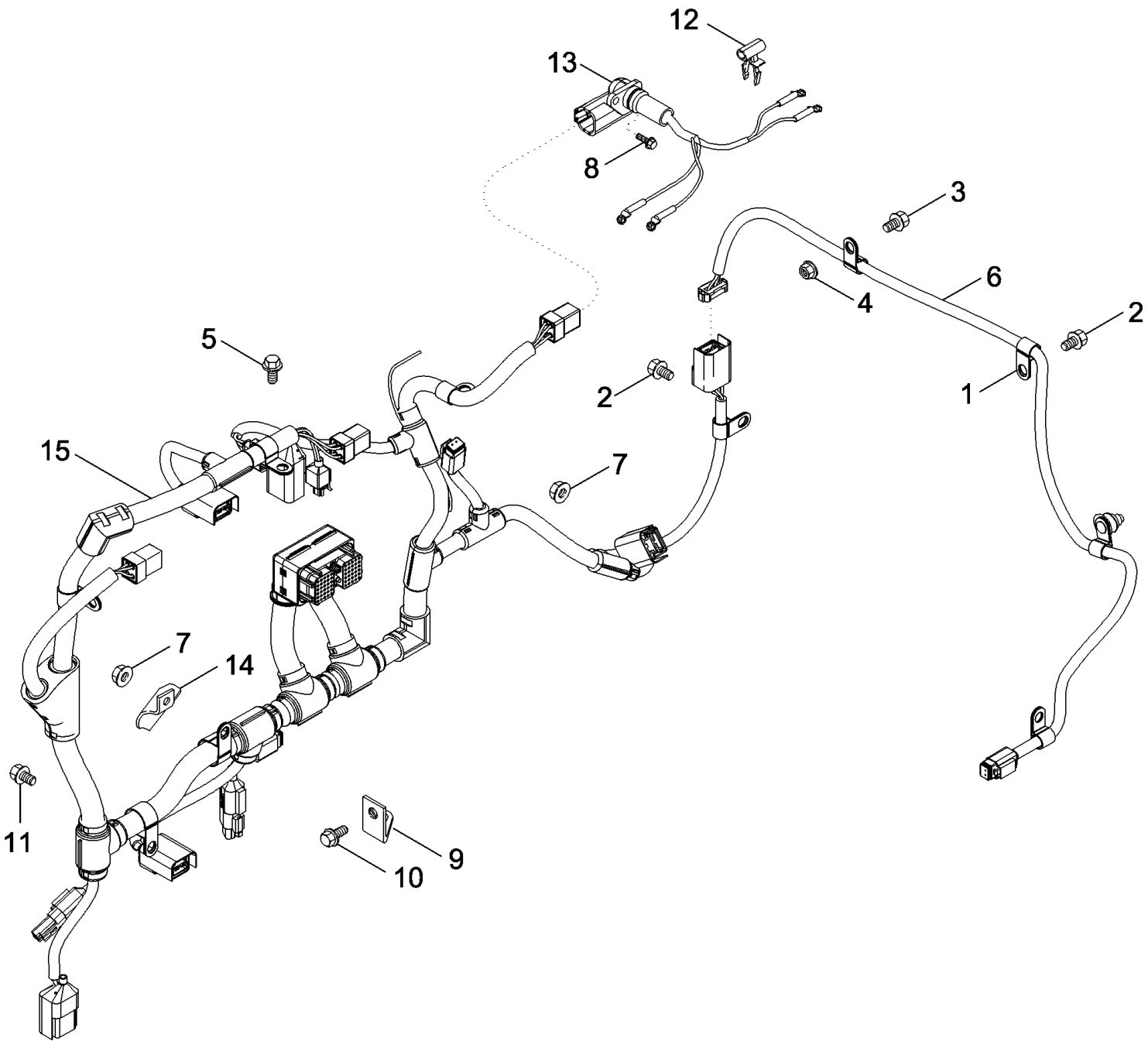

RI08D004

PDF created with pdfFactory trial version www.pdffactory.com

7088 AXIAL-FLOW COMBINE (EU) (4/08-)

04-09 HARNESS, ENGINE CONTROL MODULE

ссылка	Номер детали	Кол-во	Описание
1	515-23127	1	CLAMP, 1/2", Insul, 3/8" Bolt,
2	313490A1	2	BOLT, M10 x 14
3	615-8012	1	BOLT, Hex, M8 x 12, 8.8, Full Thd,
4	825-2408	1	NUT, M8 x 1.25, Flg, Cl 8,
5	845-6010	1	BOLT, Hex Flg, M6 x 10, 8.8, Full Thd,
6	87750207	1	HARNESS, Temp Sensor
7	825-2406	3	NUT, M6 x 1, Flg, Cl 8,
8	845-6015	3	BOLT, Hex Flg, M6 x 15, 8.8, Full Thd,
9	J919294	1	SUPPORT, Tube Fuel Supply
10	87346341	1	BOLT,
11	J925883	1	SCREW, M8 x 16: 10.9
12	87346212	8	CLIP, WIRE,
13	87346235	3	HARNESS, WIRE, Injector
14	87346319	1	BRACE,
15	87481082	1	HARNESS, WIRE, Engine ECM

PDF created with pdfFactory trial version www.pdffactory.com

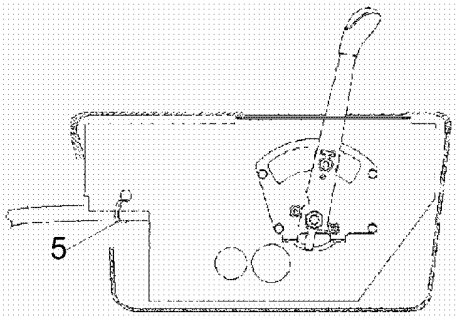

A-A

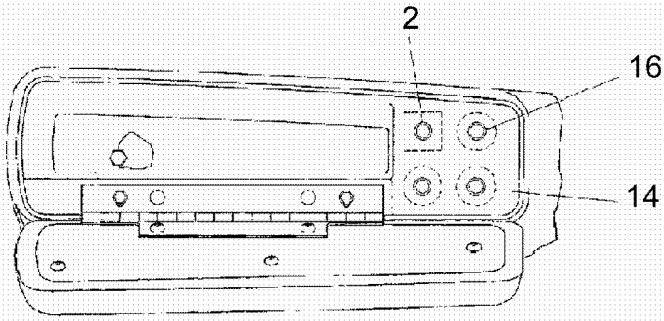

B-B

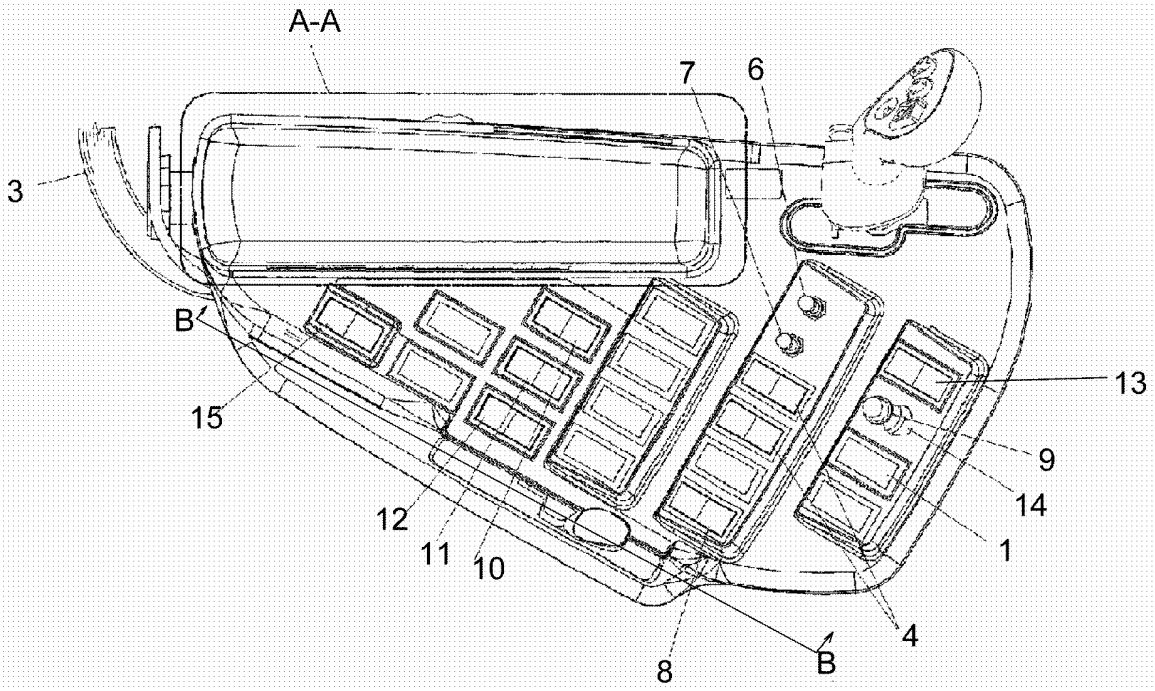

PDF created with pdfFactory trial version www.pdffactory.com

ссылка	Номер детали	Кол-во	Описание
1	245918C1	9	CAP, Blanking
2	282056A1	1	PLUG, Double "D"
3	84182343	1	HARNESS, WIRE, Console, See Figure 04-11
4	87388152	2	SWITCH ASSY, Auto Header Height Control
5	533959C1	1	CLAMP,
6	245632C2	1	SWITCH, Separator
7	245634C3	1	SWITCH, Separator
8	87691799	1	SWITCH ASSY, Roading Mode
9	118780A1	1	KNOB, Console Potentiometer
10	87682768	1	SWITCH ASSY, Rocker With Lens, Concave Adjust
11	87682767	1	SWITCH ASSY, Rocker With Lens, Fan Speed Adjust
12	87682766	1	SWITCH ASSY, Rocker With Lens, Rotor Speed Adjust
13	87388359	1	SWITCH ASSY, Auto/Manual Reel Speed
14	114551A1	5	POTENTIOMETER, 2.5 Kq
15	124098A1	1	SWITCH, Rocker With Lens, Park Brake
16	A186263	3	KNOB, Drop And Hitch Speed

PDF created with pdfFactory trial version www.pdffactory.com

04-11 HARNESS, CONSOLE

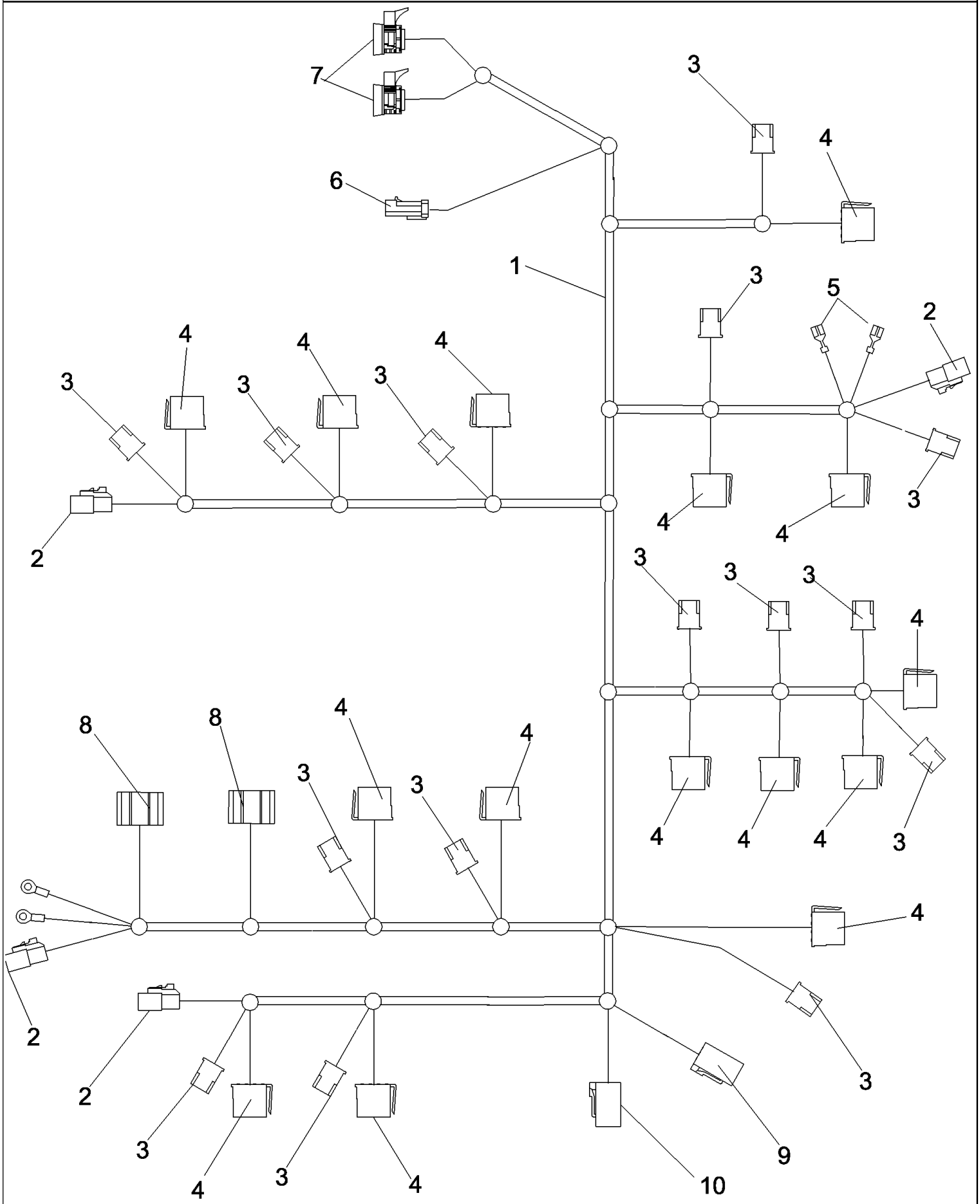

PDF created with pdfFactory trial version www.pdffactory.com

7088 AXIAL-FLOW COMBINE (EU) (4/08-)

04-11 HARNESS, CONSOLE

ссылка	Номер детали	Кол-во	Описание
1	84182343	1	HARNESS, WIRE, Console, Inc. 2 - 10
2	NSS	4	NOT SERVICED SEPARATELY, CONNECTOR, 3-Pin, C097 Raise Rate Potentiometer, C087 Min Reel Speed Potentiometer, C112 Lower Rate Potentiometer, C113 Reel Ratio Speed Potentiometer
3	225250C1	15	CONNECTOR, ELECTRIC, 2-Pin, C096, C094, C092, C084, C088, C086, C109, C107, C098, C099, C100, C102, C037, C116, C114
4	225214C1	15	CONNECTOR, 8-Pin, C095 Concave Adjust Switch, C093 Fan Speed Switch, C091 Rotor Speed Switch, C085 Park Brake Switch, C089 2-Speed Hydro Switch, C090 4 Wheel Drive Switch, C101 Auto Guidance, C103 Upper Sieve, C104 Lower Sieve, C105 Spreader Right/Left, C038 Roading
5	225179C1	2	TERMINAL CONNECTOR, Accumulator Switch
6	NSS	1	NOT SERVICED SEPARATELY, CONNECTOR, 10-Pin, C011 Cab Harness
7	NSS	2	NOT SERVICED SEPARATELY, CONNECTOR, 17-Pin, C010 Cab Main Harness, C013 Cab Main Harness
8	245432C1	2	CONNECTOR, 5-Pin, C110 Feeder Switch, C111 Separator Switch
9	225389C1	1	CONNECTOR, 12-Pin, C121 Propulsion Handle
10	225351C1	1	CONNECTOR, ELEC, 6-Pin, C120 Throttle

PDF created with pdfFactory trial version www.pdffactory.com

04-12 HANDLE ASSEMBLY, PROPULSION CONTROLS WITH PALM REST

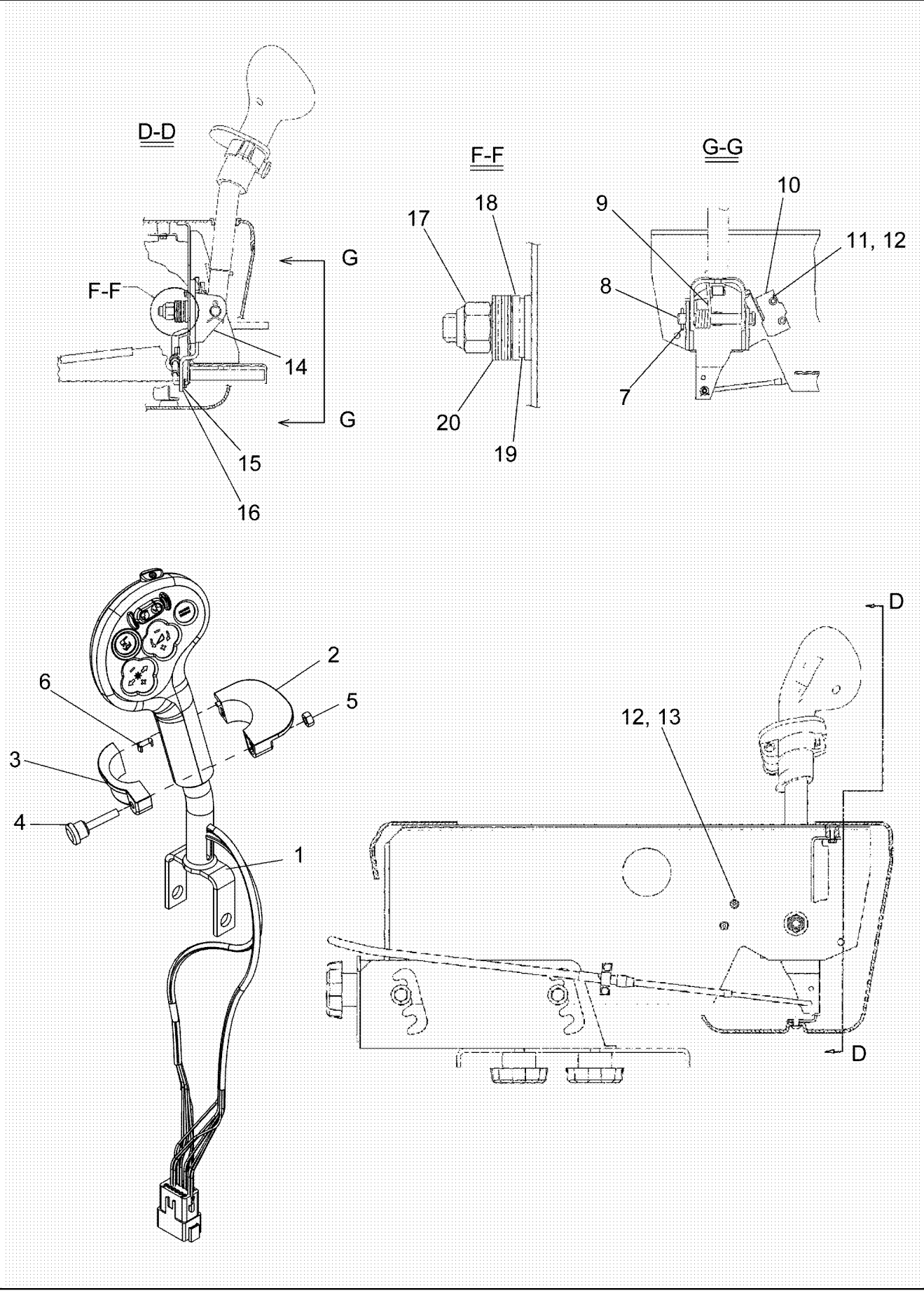

PDF created with pdfFactory trial version www.pdffactory.com

7088 AXIAL-FLOW COMBINE (EU) (4/08-)

04-12 HANDLE ASSEMBLY, PROPULSION CONTROLS WITH PALM REST

ссылка	Номер детали	Кол-во	Описание
1	87351683	1	HANDLE, Propulsion
2	NSS	1	NOT SERVICED SEPARATELY, SUPPORT, Right Hand
3	NSS	1	NOT SERVICED SEPARATELY, SUPPORT, Left Hand
4	NSS	1	NOT SERVICED SEPARATELY, KNOB
5	7770	1	NUT, 1/4"-20, G5,
6	1343962C1	1	CLIP, ELECTRICAL,
7	432-816	1	PIN, SPLIT (COTTER), 1/8" x 1",
8	27-8343	1	PIN, CLEVIS, 1/2" x 3 7/16"',
9	128593A1	1	SPRING,
10	141655A1	1	SWITCH, Back-Up Alarm
11	463-10416	2	SCREW, Hex Hd, #4-40 x 1",
12	895-11004	4	WASHER, M4,
13	225-14104	2	NUT, #4-40,
14	113318A2	1	SUPPORT, Propulsion Control Lever
15	432-48	1	PIN, SPLIT (COTTER), 1/16" x 1/2",
16	895-11005	2	WASHER, M5 x 10 x 1,
17	231-1447	1	NUT, LOCK, 7/16"-14, GB,
18	251090A1	1	WASHER,
19	159688R91	1	BEARING, THRUST, Pump Control Actuating Arm
20	1994980C1	6	WASHER,

PDF created with pdfFactory trial version www.pdffactory.com

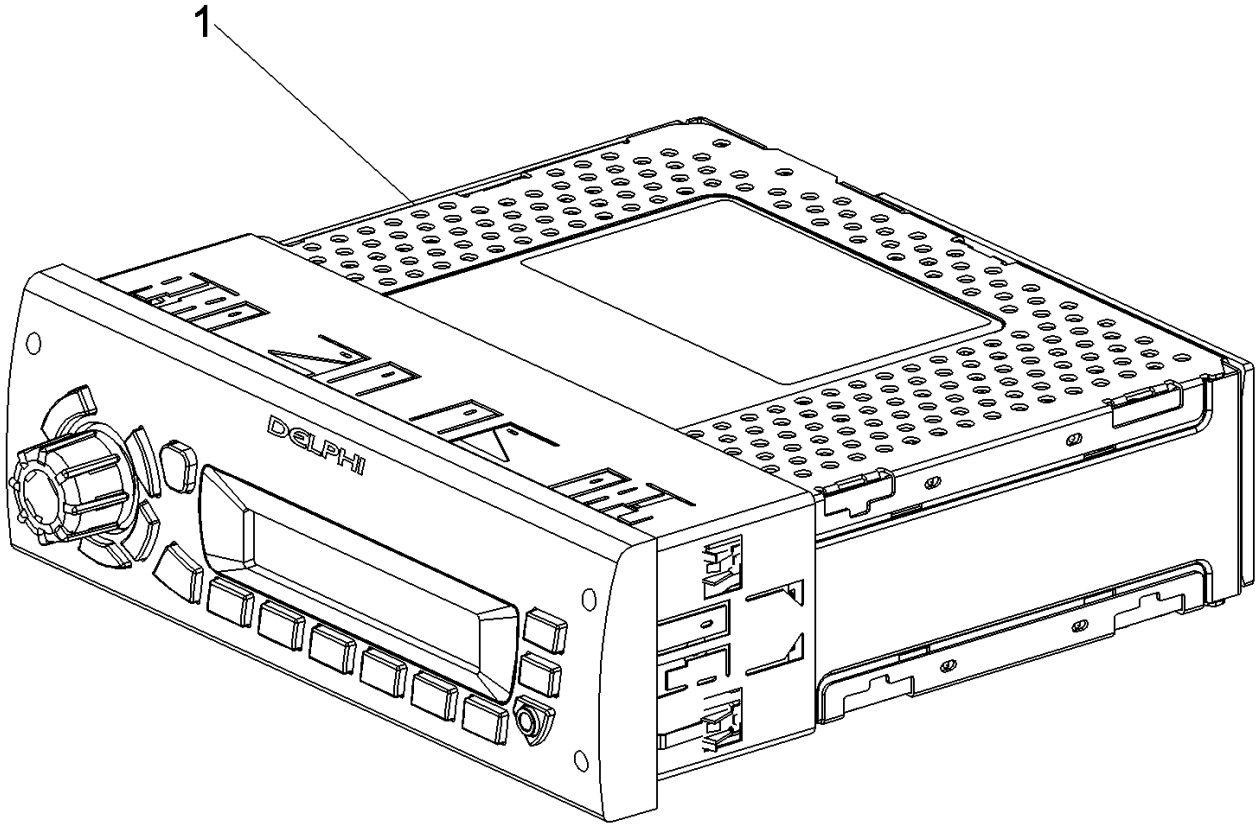

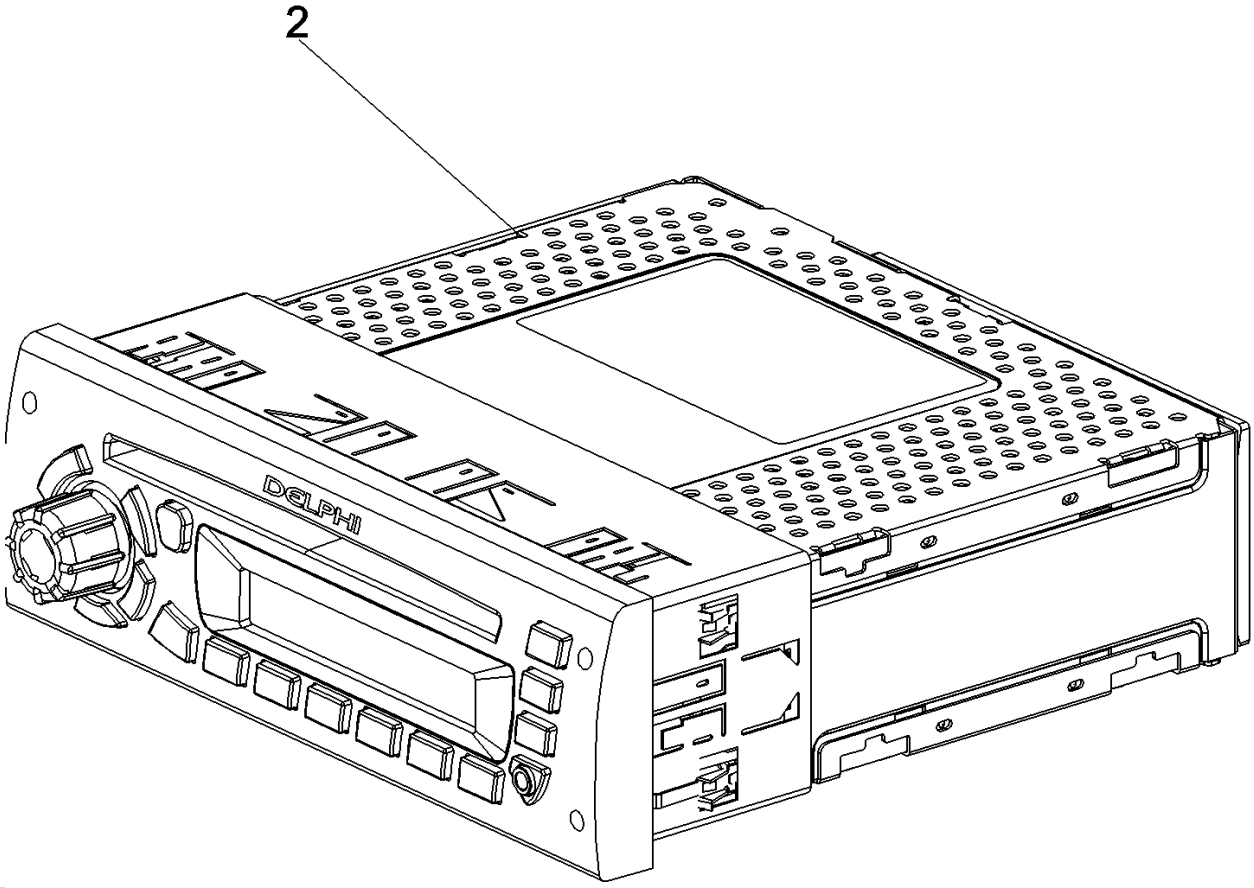

PDF created with pdfFactory trial version www.pdffactory.com

7088 AXIAL-FLOW COMBINE (EU) (4/08-)

04-13 RADIO

ссылка	Номер детали	Кол-во	Описание
1	87714993	1	RADIO, AM/FM/WB With Aux Input
2	87714994	1	RADIO, AM/FM/WB/CD With Aux Input

PDF created with pdfFactory trial version www.pdffactory.com

04-14 INSTRUMENT PANEL ASSEMBLY

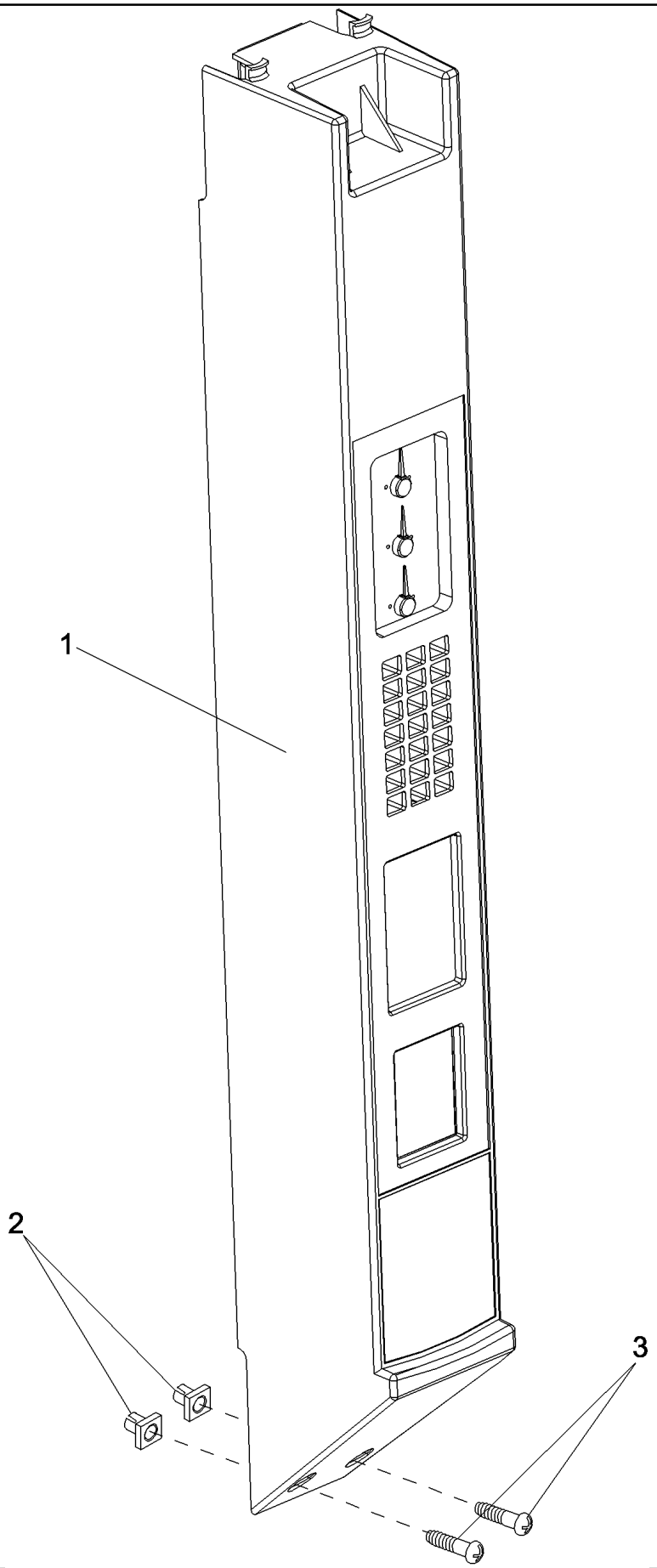

PDF created with pdfFactory trial version www.pdffactory.com

7088 AXIAL-FLOW COMBINE (EU) (4/08-)

04-14 INSTRUMENT PANEL ASSEMBLY

ссылка	Номер детали	Кол-во	Описание
1	87311868	1	MODULE, A-Post 2 Display
2	R53000	2	NUT,
3	260-13524	2	SCREW, SELF TAPPING, Cross Pan Hd, #10 x 1 1/2",

PDF created with pdfFactory trial version www.pdffactory.com

1

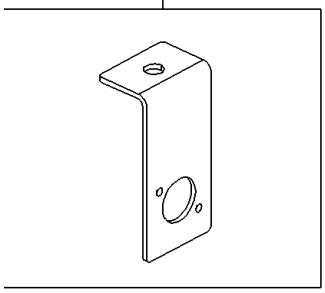

2, 7, 17,

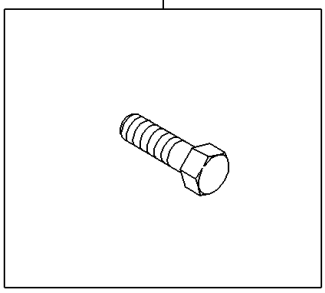

3, 5, 8, 16, 19, 21, 25

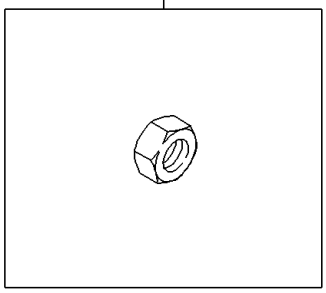

4, 18

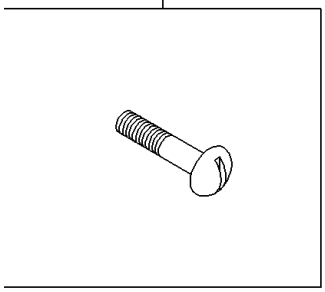

6

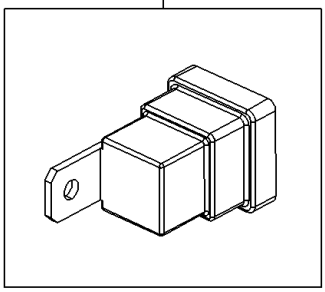

9

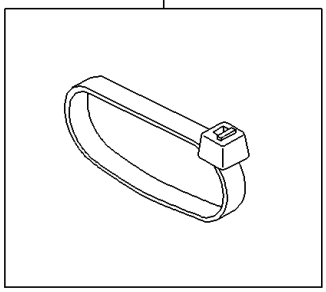

10

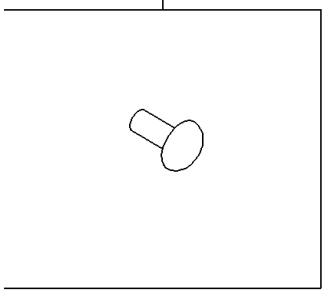

11, 15, 26, 29

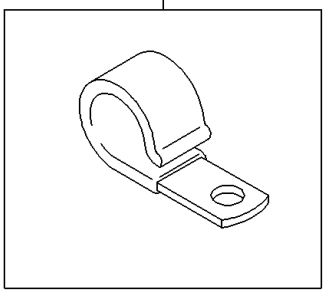

12, 13

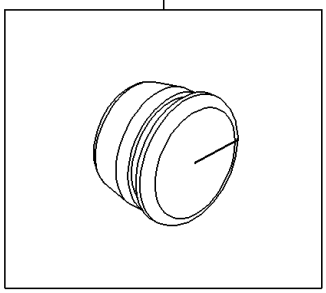

14, 23, 27, 28

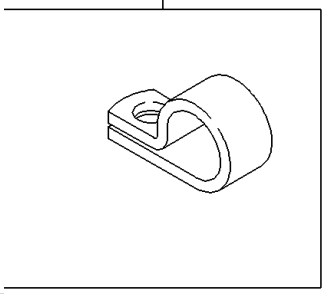

20, 22

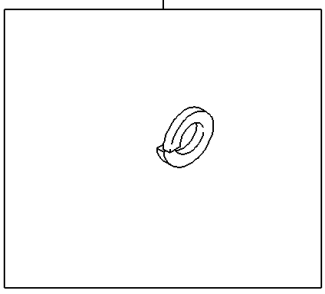

24

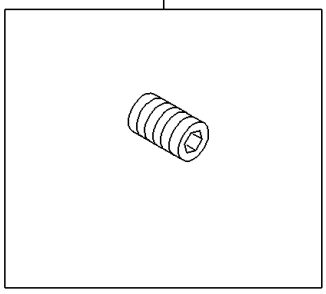

PDF created with pdfFactory trial version www.pdffactory.com

7088 AXIAL-FLOW COMBINE (EU) (4/08-)

04-15 HARDWARE, CHASSIS HARNESSES

ссылка	Номер детали	Кол-во	Описание
1	87752142	1	BRACKET, Use To Mount Service Light Connector On Right Hand Side
2	87698834	1	BOLT, Use To Mount Bracket Ref. 1
3	86507066	1	NUT, M8 x 1.25, Flg, Cl 10, Use To Mount Bracket Ref. 1
4	412064	8	SCREW, Hex, M4 x 16, 8.8, Full Thd, Use To Mount Service Light And Grain Tank Bulkhead Connectors
5	100012	8	NUT, M4, Cl 8, Use To Mount Service Light And Grain Tank Bulkhead Connectors
6	86508603	2	RELAY, Sealed Skirt With Bracket
7	409-7412	2	BOLT, Hex Flg, 1/4"-20 x 3/4", Serr,
8	231-5144	2	NUT, Flg, USR, 1/4"-20,
9	86566989	60	STRAP, CABLE, M4.75 x 190.5 L,
10	445395	60	RIVET, Pop, M4.8 x 18.1,
11	86590413	75	CLAMP,
12	86976974	3	GROMMET,
13	87107420	3	GROMMET,
14	370383R1	2	CLIP,
15	515-23254	1	CLAMP, 1", Insul, 3/8" Bolt, Use To Secure Front Harness To Left Hand Side Post
16	231-5146	1	NUT, Flg, USR, 3/8"-16, Use To Secure Front Harness To Left Hand Side Post
17	409-7612	1	BOLT, Hex Flg, 3/8"-16 x 3/4", Serr, Use To Secure Front Harness To Left Hand Side Post
18	281-1458	2	SCREW, SELF TAPPING, Hex Wash Hd, #10 x 1/2",
19	425-105	2	NUT, 5/16"-18, G5,
20	492-11031	2	WASHER, LOCK, 5/16",
21	225-14210	1	NUT, #10-32,
22	492-11010	1	WASHER, LOCK, #10,
23	197991A1	2	CLIP, ELECTRICAL, Grain Tank Switch Wire
24	878-30840	2	SET SCREW, Hex Soc, M8 x 40, Flat Pt, Install Into Grounding Bushings
25	87681210	4	NUT, Hex, M8, Cl 10, Use To Secure Ground Wires To Chassis
26	516-23127	2	CLAMP, J, 9/16" Insul, 3/8" Bolt, Use To Secure Wires To Fuel Pump
27	87694057	2	CLIP, Use To Secure Right Hand Harness Wires In Rear
28	362666R1	2	CLIP, Use On Right Hand Rear Rotor Panel Area
29	516-2395	4	CLAMP, J, 7/16" Insul, 3/8" Bolt,

PDF created with pdfFactory trial version www.pdffactory.com

04-16 HARNESS, CHASSIS, LEFT HAND SIDE

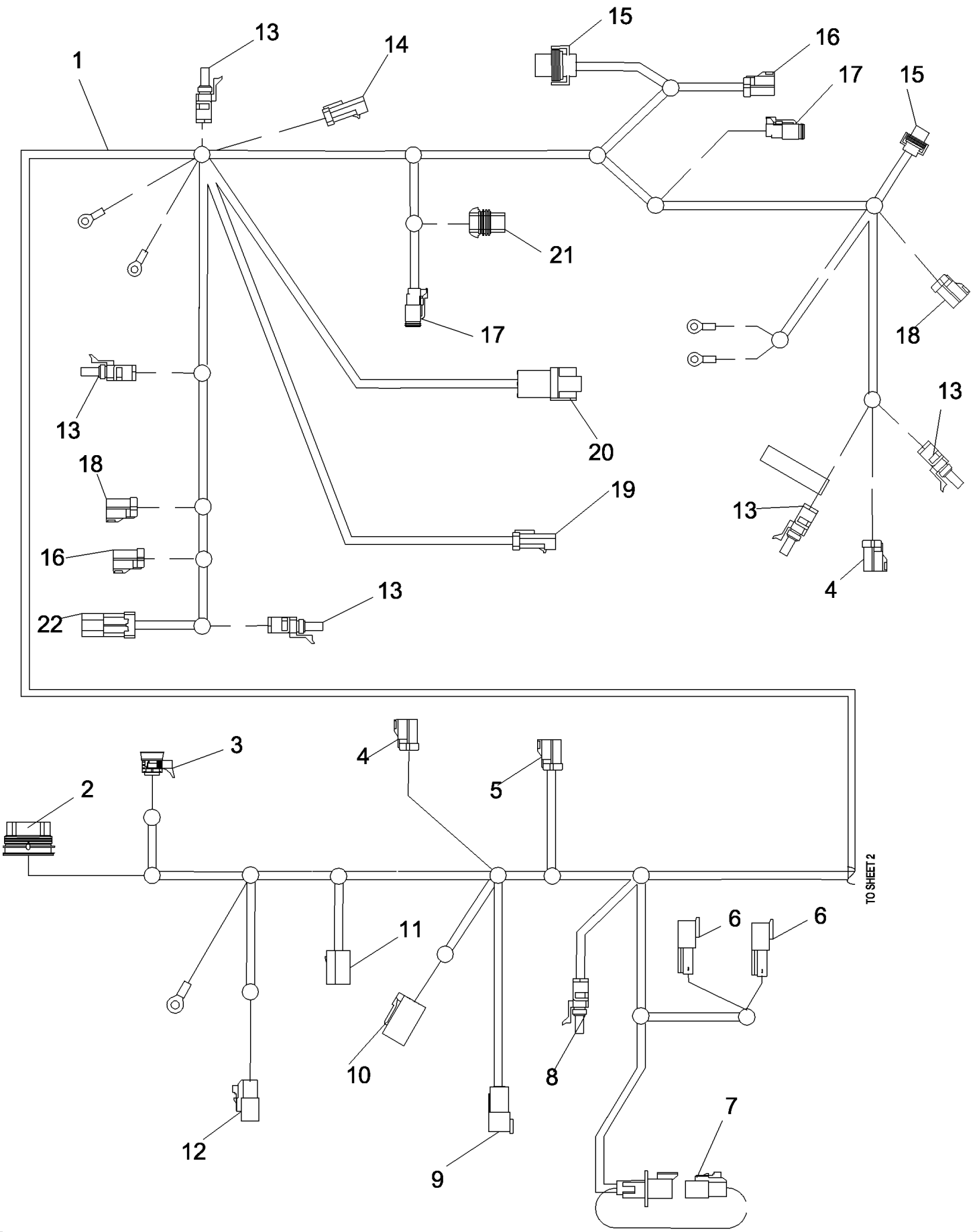

PDF created with pdfFactory trial version www.pdffactory.com

7088 AXIAL-FLOW COMBINE (EU) (4/08-)

04-16 HARNESS, CHASSIS, LEFT HAND SIDE

ссылка	Номер детали	Кол-во	Описание
1	87676242	1	HARNESS, WIRE, Chassis, Left Hand Side, Inc. 2 - 22
2	NSS	1	NOT SERVICED SEPARATELY, CONNECTOR, 50-Pin, C003 To Cab
3	NSS	1	NOT SERVICED SEPARATELY, CONNECTOR, 14-Pin, C122
4	NSS	2	NOT SERVICED SEPARATELY, CONNECTOR, 3-Pin, C230 Underpanel Lights, C247 Ladder Position Sensor
5	NSS	1	NOT SERVICED SEPARATELY, CONNECTOR, 10-Pin, C179 To Right Hand Side Harness
6	87428138	2	3-Pin, C237 Lower Sieve, C238 Upper Sieve
7	225295C1	1	CONNECTOR, ELEC, 3-Pin, C225 Plug-In Service Light
8	245484C1	1	CONNECTOR, ELEC, 3-Pin, C227 Beater/Chopper Sensor
9	NSS	1	NOT SERVICED SEPARATELY, CONNECTOR, 6-Pin, C226 Rotor Loss Sensor
10	NSS	1	NOT SERVICED SEPARATELY, CONNECTOR, C249 Separator/Unloader Auger
11	877291R1	1	CONNECTION, 2-Pin, C222 Concave Motor
12	NSS	1	NOT SERVICED SEPARATELY, CONNECTOR, 3-Pin, C223 Concave Position
13	245482C1	5	CONNECTOR, ELEC, 2-Pin, C242 Engine Speed, C218 Engine Compartment Light, C241 Straw Spreader Speed, C236 Tailings Speed, C233 4 Wheel Drive
14	NSS	1	NOT SERVICED SEPARATELY, CONNECTOR, 6-Pin, C123 Chaff Spreader
15	237661A1	2	CONNECTOR, ELEC, 2-Pin, C256 Engine Deck Light, C246 Left Hand Rear Work Light
16	NSS	2	NOT SERVICED SEPARATELY, CONNECTOR, 2-Pin, C186 Unloader In Limit Switch, C235 Shoe Speed
17	NSS	2	NOT SERVICED SEPARATELY, CONNECTOR, 2-Pin, C245 Fuel Level Sender, C243 WIF Sensor
18	NSS	2	NOT SERVICED SEPARATELY, CONNECTOR, 6-Pin, C248 Left Hand Rear Safety Lights, C055 Shoe Sieve Harness
19	NSS	1	NOT SERVICED SEPARATELY, CONNECTOR, 14-Pin, C231
20	225319C1	1	CONNECTOR, ELEC, 8-Pin, C244 Trailer Connector
21	182069A1	1	CONNECTOR, 2-Pin, C240 Fuel Pump
22	182068A1	1	CONNECTOR, 2-Pin, C232 Clean Ground

PDF created with pdfFactory trial version www.pdffactory.com

04-17 HARNESS, CHASSIS, RIGHT HAND SIDE

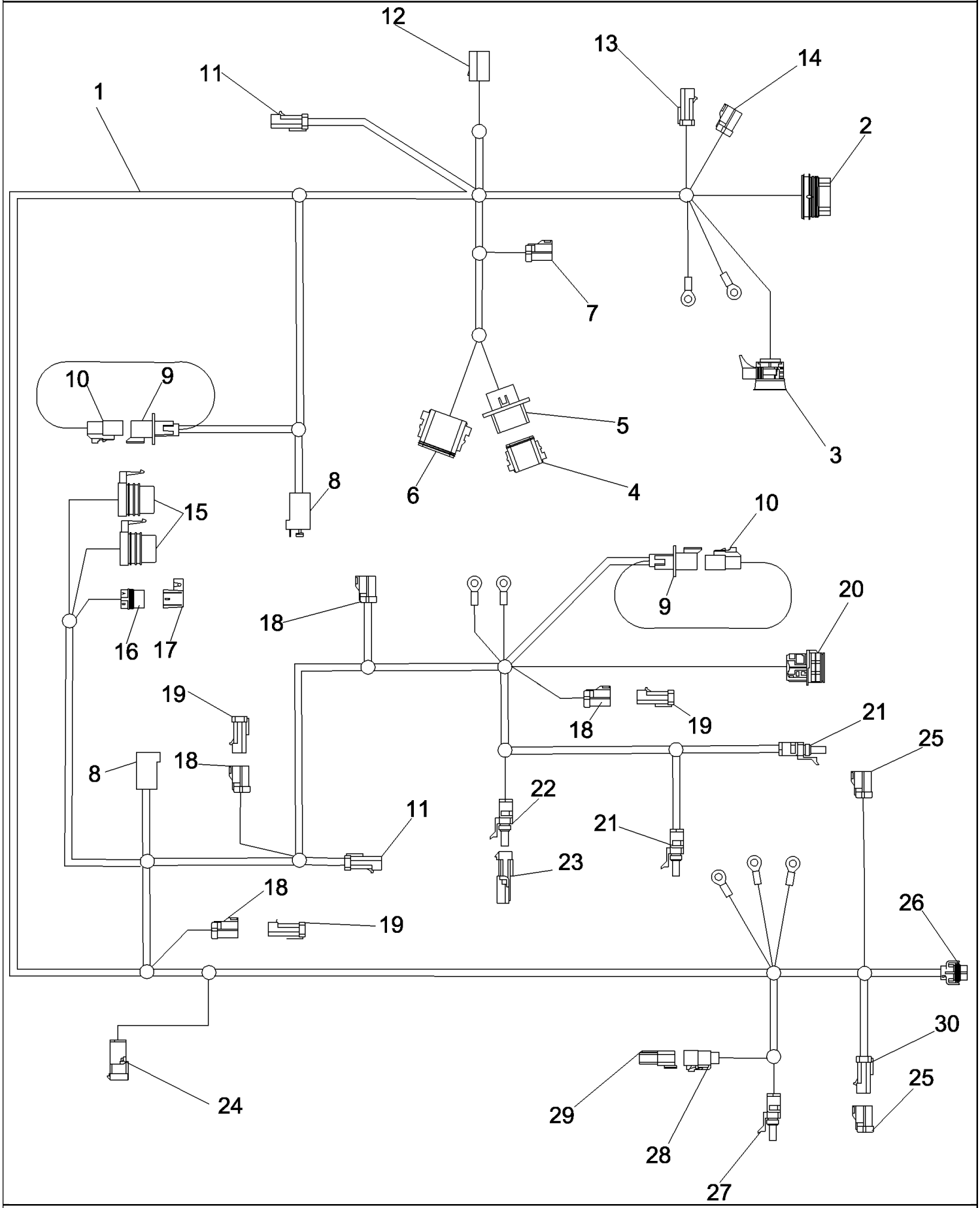

PDF created with pdfFactory trial version www.pdffactory.com

7088 AXIAL-FLOW COMBINE (EU) (4/08-)

04-17 HARNESS, CHASSIS, RIGHT HAND SIDE

ссылка	Номер детали	Кол-во	Описание
1	84147088	1	HARNESS, WIRE, Right Hand Side, Inc. 2 - 30
2	NSS	1	NOT SERVICED SEPARATELY, CONNECTOR, 50-Pin, C024 Cab Connector
3	NSS	1	NOT SERVICED SEPARATELY, CONNECTOR, 34-Pin, C023 Cab Connector
4	87338973	1	HARNESS, WIRE, Jumper Can Termination
5	NSS	1	NOT SERVICED SEPARATELY, CONNECTOR, 12-Pin, C173
6	NSS	1	NOT SERVICED SEPARATELY, CONNECTOR, 12-Pin, C174
7	NSS	1	NOT SERVICED SEPARATELY, CONNECTOR, 10-Pin, C192 Auto Guidance
8	199438A1	2	CONNECTOR, 2-Pin, C176 Fan Speed Motor, C178 Rotor Speed Motor
9	NSS	2	NOT SERVICED SEPARATELY, CONNECTOR, 3-Pin, C177 Plug-In Service Light, C194 Plug-In Service Light
10	225295C1	2	CONNECTOR, ELEC, 3-Pin, C177 Plug-In Service Light, C194 Plug-In Service Light
11	NSS	2	NOT SERVICED SEPARATELY, CONNECTOR, 10-Pin, C219 To Lower Harness, C179 To Left Hand Harness
12	877291R1	1	CONNECTION, 2-Pin, C196 Washer Pump
13	NSS	1	NOT SERVICED SEPARATELY, CONNECTOR, C172 To Auto Guidance Controller If Equippe
14	NSS	1	NOT SERVICED SEPARATELY, CONNECTOR, C171 To Auto Guidance Controller If Equippe
15	NSS	2	NOT SERVICED SEPARATELY, CONNECTOR, 5-Pin, C334, C335
16	NSS	1	NOT SERVICED SEPARATELY, CONNECTOR With 40 amp ATO Fuse, 2-Pin, C333
17	NSS	1	NOT SERVICED SEPARATELY, FUSE CONNECTOR COVER
18	NSS	4	NOT SERVICED SEPARATELY, CONNECTOR, 2-Pin, C195 Grain Tank Covers, C180 Hydraulic Oil Level, C197 Underpanel Lights, C193 Underpanel Lights
19	NSS	3	NOT SERVICED SEPARATELY, DUST CAP
20	NSS	1	NOT SERVICED SEPARATELY, CONNECTOR, 34-Pin, C182
21	245482C1	2	CONNECTOR, ELEC, 2-Pin, C184 Hydro Neutral Switch, C185 Hydraulic Oil Temperture
22	245486C1	1	CONNECTOR, ELEC, 4-Pin, C183 Lincoln Lube
23	245487C1	1	CONNECTOR, ELEC, 4-Pin, C183 Lincoln Lube
24	245716C1	1	CONNECTOR, ELEC, 4-Pin, C189 Rotor Limit Switch Harness
25	NSS	2	NOT SERVICED SEPARATELY, CONNECTOR, 6-Pin, C188 Rear Tail/Stop Light, C191 Spread Pattern Control (Opt)
26	237661A1	1	CONNECTOR, ELEC, 2-Pin, C190 Right Hand Work Light
27	245484C1	1	CONNECTOR, ELEC, 3-Pin, C187 Tailing Volume Sensor
28	277904A1	1	CONNECTOR, ELEC, 4-Pin, C161
29	277905A1	1	CONNECTOR, ELEC, 4-Pin, C161
30	NSS	1	NOT SERVICED SEPARATELY, CONNECTOR, 6-Pin, Spread Pattern Control (Opt)

PDF created with pdfFactory trial version www.pdffactory.com

04-18 HARNESS, CHASSIS, LEFT HAND FRONT

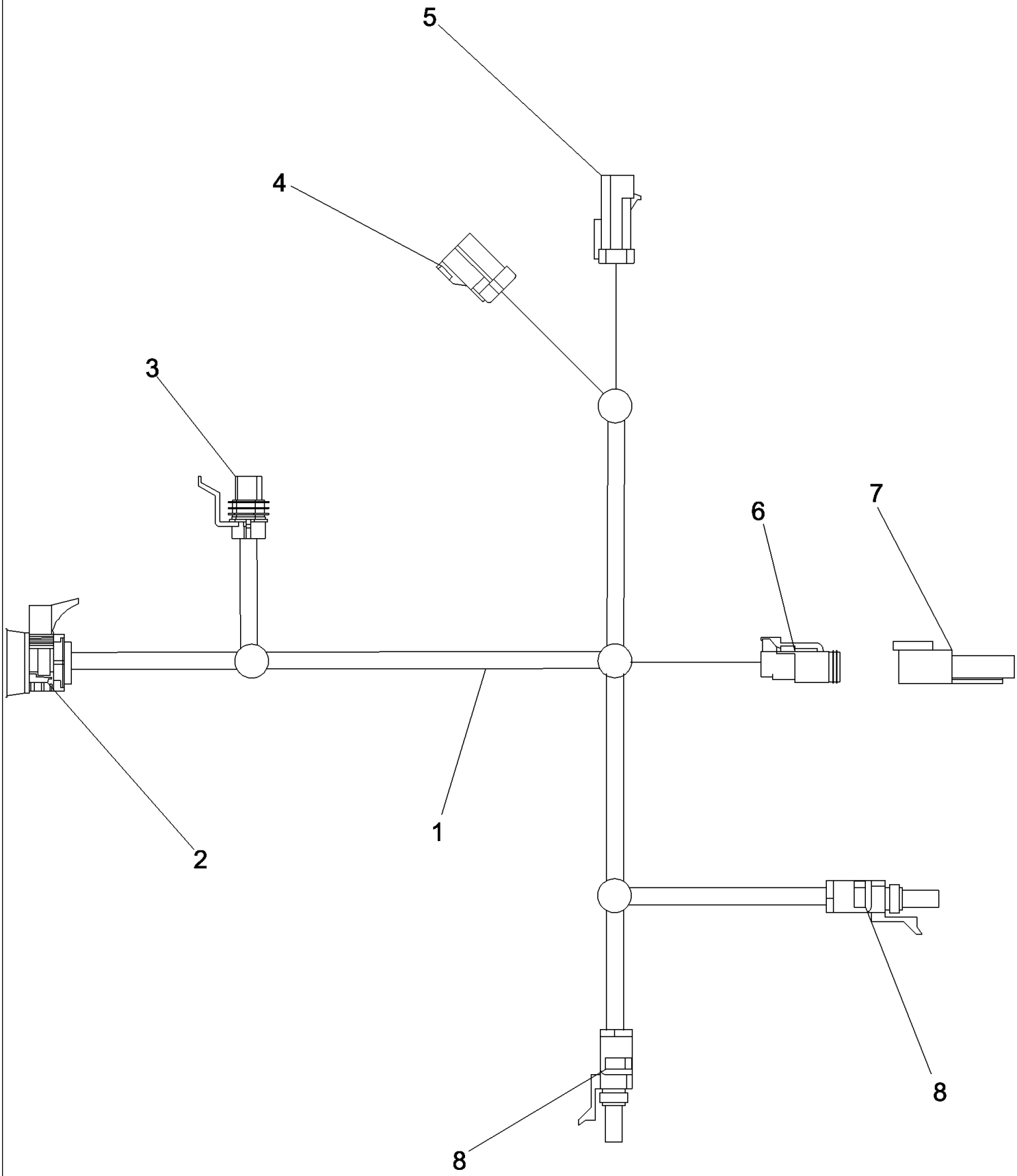

PDF created with pdfFactory trial version www.pdffactory.com

7088 AXIAL-FLOW COMBINE (EU) (4/08-)

04-18 HARNESS, CHASSIS, LEFT HAND FRONT

ссылка	Номер детали	Кол-во	Описание
1	87742265	1	HARNESS, WIRE, Left Hand Front, Inc. 2 - 8
2	NSS	1	NOT SERVICED SEPARATELY, CONNECTOR, 34-Pin, C002 To Cab
3	198456A1	1	CONNECTOR, ELEC, 3-Pin, C201 Header Lift Pressure
4	NSS	1	NOT SERVICED SEPARATELY, CONNECTOR, 14-Pin, C204 To Feeder Harness
5	NSS	1	NOT SERVICED SEPARATELY, CONNECTOR, 14-Pin, C205 To Feeder Harness
6	NSS	1	NOT SERVICED SEPARATELY, CONNECTOR, 2-Pin, C211
7	225315C1	1	CONNECTOR, ELEC, Install For Dust Cap
8	245482C1	2	CONNECTOR, ELEC, 2-Pin, C214 Feeder Speed Sensor, C203 Rotor Speed

PDF created with pdfFactory trial version www.pdffactory.com

04-19 HARNESS, CHASSIS, FRONT LOWER

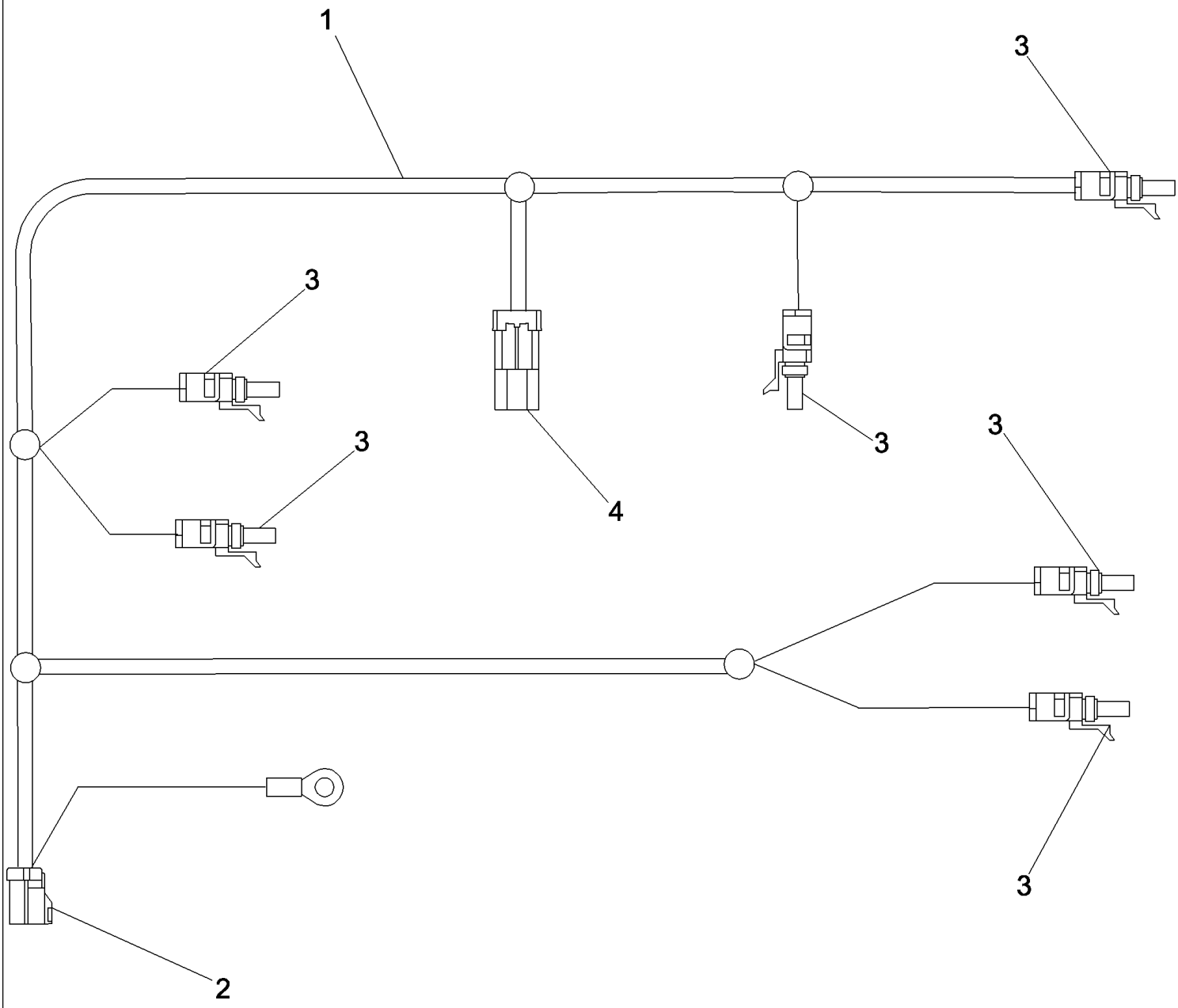

PDF created with pdfFactory trial version www.pdffactory.com

7088 AXIAL-FLOW COMBINE (EU) (4/08-)

04-19 HARNESS, CHASSIS, FRONT LOWER

ссылка	Номер детали	Кол-во	Описание
1	84146317	1	HARNESS, WIRE, Front Lower
2	NSS	1	NOT SERVICED SEPARATELY, CONNECTOR, 10-Pin, C219 To Right Hand Harness
3	245482C1	6	CONNECTOR, ELEC, 2-Pin, C209 Ground Speed Sensor, C208 Feeder Clutch Solenoid, C212 Fan Speed Sensor, C213 Clean Grain Speed Sensor, C207 Park Brake Solenoid, C206 Park Brake Pressure
4	182068A1	1	CONNECTOR, 2-Pin, C210 Variable Propulsion Motor

PDF created with pdfFactory trial version www.pdffactory.com

04-20 HARNESS, CHASSIS, ROTOR PADS AND GRAIN SCAN ROTOR SENSOR

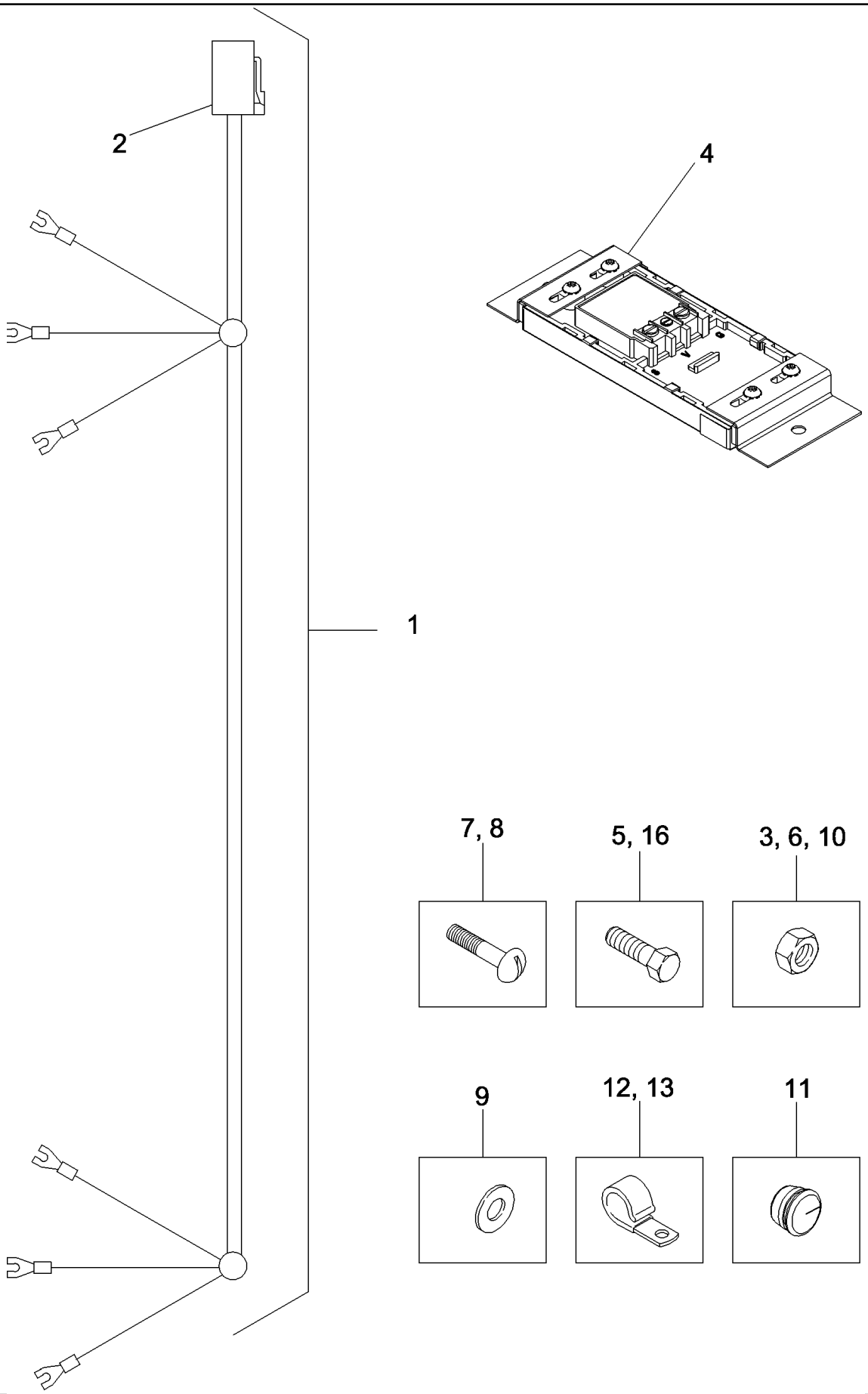

PDF created with pdfFactory trial version www.pdffactory.com

7088 AXIAL-FLOW COMBINE (EU) (4/08-)

04-20 HARNESS, CHASSIS, ROTOR PADS AND GRAIN SCAN ROTOR SENSOR

ссылка	Номер детали	Кол-во	Описание
1	87603654	1	HARNESS, WIRE, Rotor Pads, Inc. 2
2	NSS	1	NOT SERVICED SEPARATELY, CONNECTOR, 6-Pin, C226
3	231-5145	4	NUT, Flg, USR, 5/16"-18,
4	245362C1	1	TRANSMITTER, Rotor Sensor Assembly
5	477-73112	4	BOLT, Slotted Tr Hd, 5/16"-18 x 3/4",
6	231-5145	4	NUT, Flg, USR, 5/16"-18,
7	260-1356	4	SCREW, SELF TAPPING, Cross Pan Hd, #10 x 3/8",
8	440-10610	4	SCREW, Cross Pan Hd, #6-32 x 5/8",
9	493-11014	4	WASHER, LOCK, Ext-Int Tooth, #6,
10	225-14106	4	NUT, #6-32,
11	86976974	1	GROMMET,
12	515-23127	1	CLAMP, 1/2", Insul, 3/8" Bolt,
13	515-2395	4	CLAMP, 3/8", Insul, 3/8" Bolt,

PDF created with pdfFactory trial version www.pdffactory.com

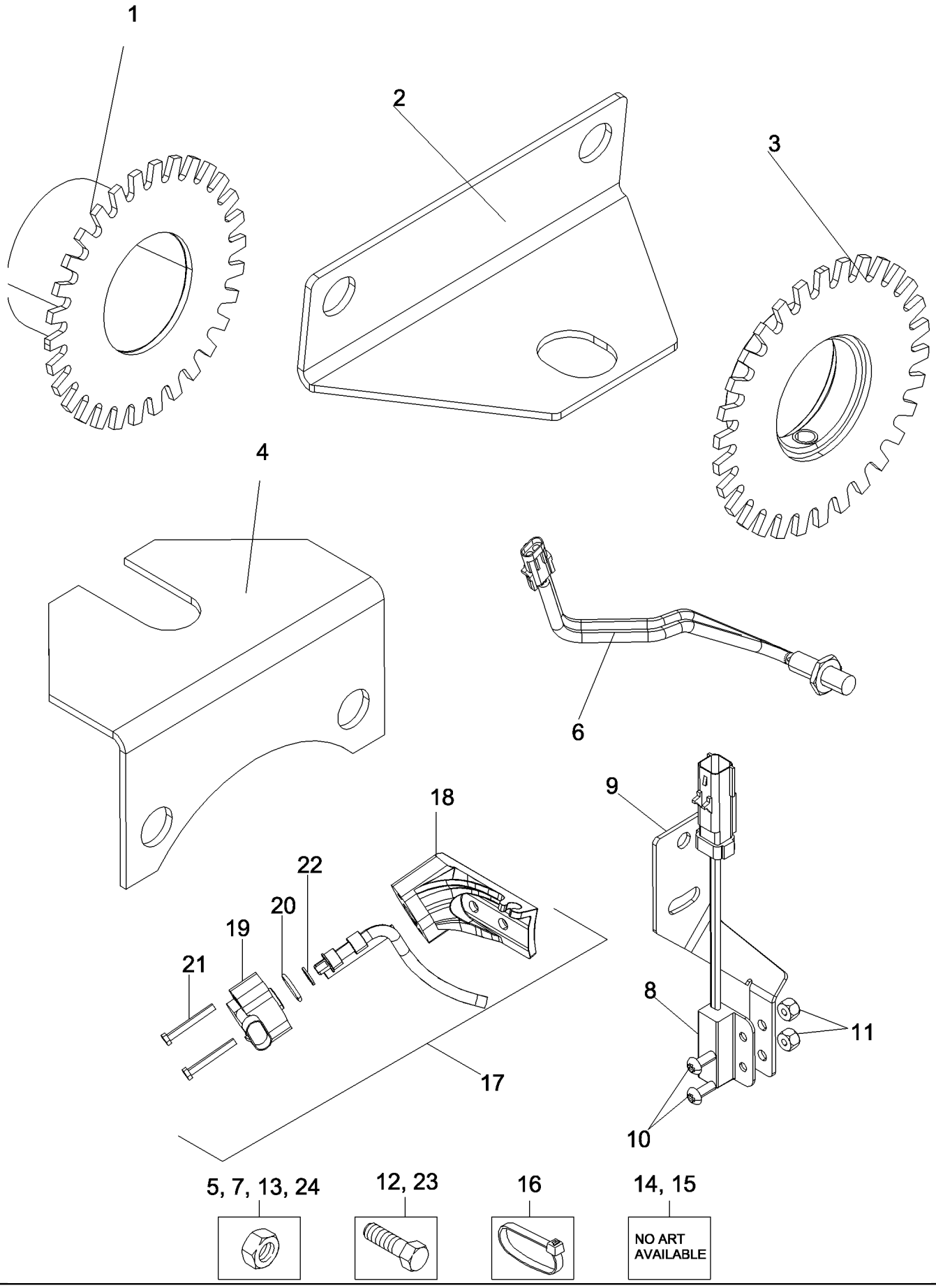

PDF created with pdfFactory trial version www.pdffactory.com

7088 AXIAL-FLOW COMBINE (EU) (4/08-)

04-21 INSTRUMENTATION SENSORS

ссылка	Номер детали	Кол-во	Описание
1	1979965C1	1	ROTOR, Speed Pickup
2	1301239C1	1	SUPPORT, Rotor Speed Pickup
3	1541555C1	1	SPROCKET, Speed Pickup, Cleaning Fan
4	1541554C1	1	SUPPORT, Fan Speed Tach
5	231-5148	2	NUT, Flg, USR, 1/2"-13,
6	245193C2	4	SENSOR, Transducer, MPH + Fan RPM
7	425-1512	2	NUT, Jam, 3/4"-10, G5,
8	87392235	1	SWITCH ASSY, Reed Non-Contact Normally Open
9	87738355	1	BRACKET, Shoe Speed Sensor
10	440-1108	2	SCREW, Cross Pan Hd, #10-24 x 1/2",
11	231-14109	2	NUT, LOCK, #10-24, GB,
12	434-512	2	BOLT, CARRIAGE, Short NK, 5/16"-18 x 3/4", G5, Full Thd,
13	231-5145	2	NUT, Flg, USR, 5/16"-18,
14	1345482C3	1	TRANSMITTER, Clean Grain
15	87389529	1	SENSOR, Shaft Speed
16	473321C1	1	STRAP, CABLE, .098" x 8",
17	87368474	1	SENSOR, Tailing, Inc. 18 - 22
18	225762A6	1	HOUSING, Tailings Sensor
19	87368468	1	SENSOR, Rotary Position
20	238-5115	1	O-RING, -115, 70 Duro, .674" ID x .103" Thk,
21	463-11024	2	SCREW, Hex Hd, #10-24 x 1 1/2",
22	239809A1	1	WASHER,
23	409-7512	2	BOLT, Hex Flg, 5/16"-18 x 3/4", Serr,
24	425-285	2	NUT, Flg, 5/16"-18, G5,

PDF created with pdfFactory trial version www.pdffactory.com

04-22 HARNESS, REAR LIGHTS

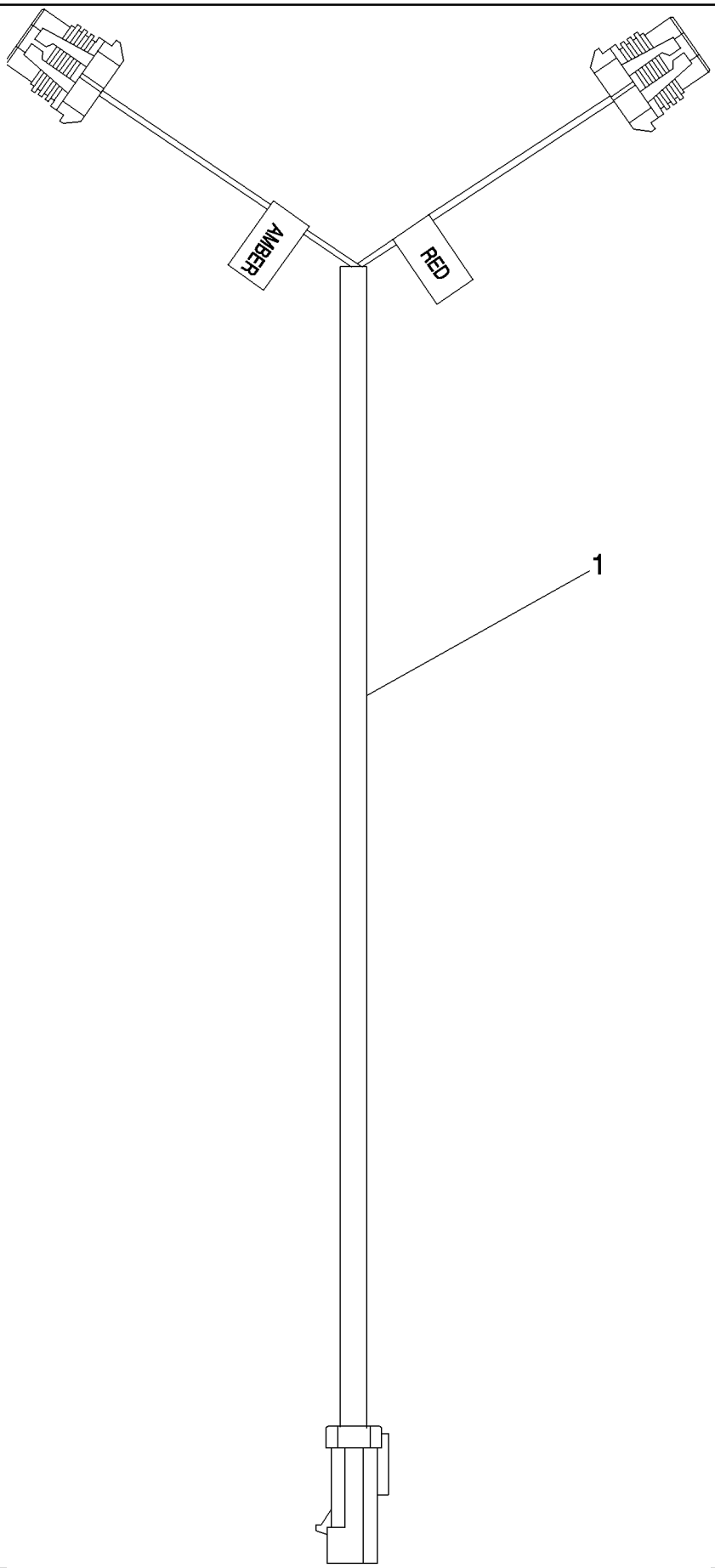

PDF created with pdfFactory trial version www.pdffactory.com

7088 AXIAL-FLOW COMBINE (EU) (4/08-)

04-22 HARNESS, REAR LIGHTS

ссылка	Номер детали	Кол-во	Описание
1	87588644	2	HARNESS, WIRE, Rear Lights

PDF created with pdfFactory trial version www.pdffactory.com

04-23 HARNESS, PLATFORM

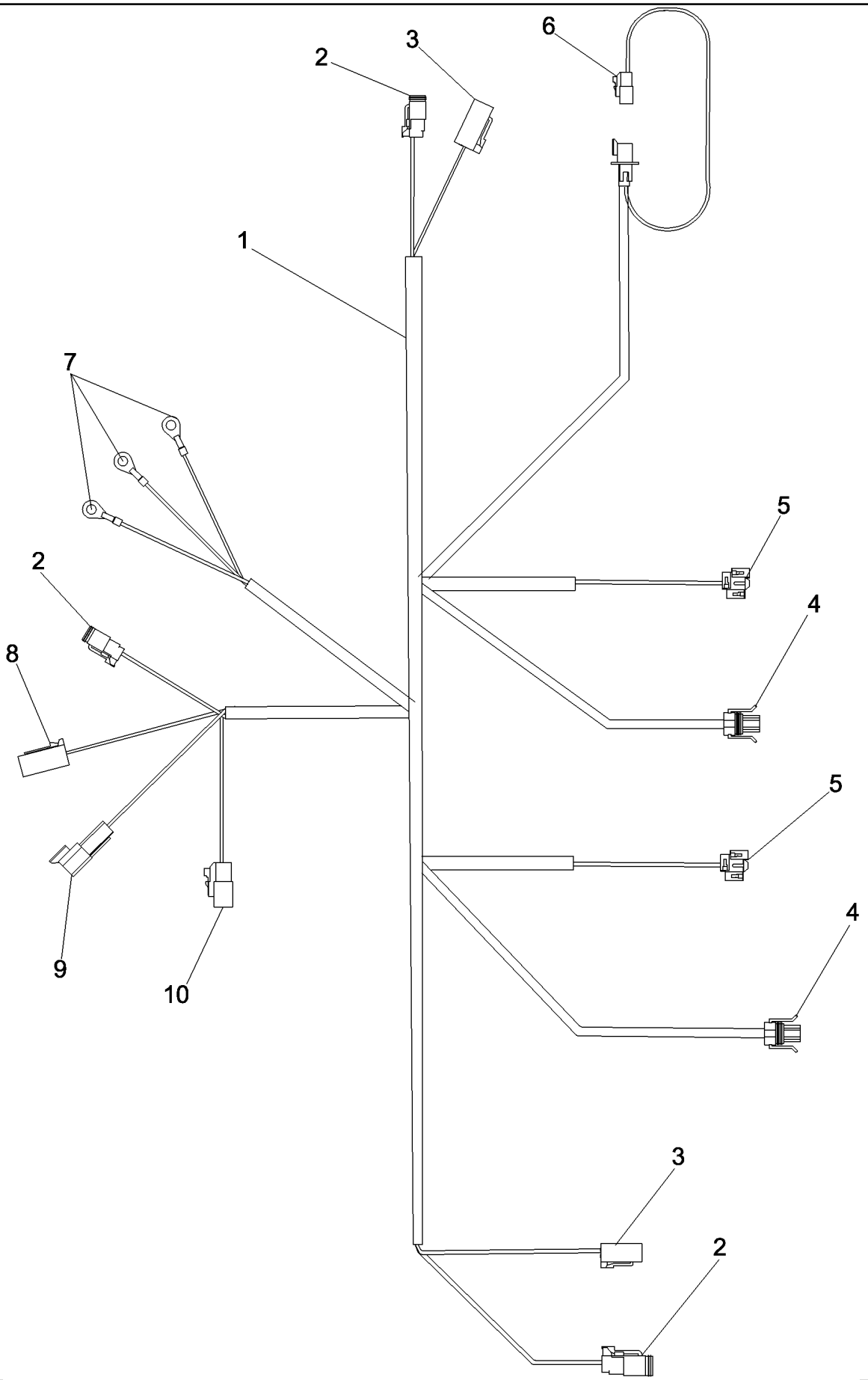

PDF created with pdfFactory trial version www.pdffactory.com

7088 AXIAL-FLOW COMBINE (EU) (4/08-)

04-23 HARNESS, PLATFORM

ссылка	Номер детали	Кол-во	Описание
1	87676244	1	HARNESS, WIRE, Platform, Inc. 2 - 10
2	NSS	3	NOT SERVICED SEPARATELY, CONNECTOR, C129, C128, C130 Left Hand And Right Hand Side Turn, Steering Column Harness, 2-Pin
3	NSS	2	NOT SERVICED SEPARATELY, CONNECTOR, C157, C151, Left Hand And Right Hand Position/Turn Light, 4-Pin
4	237661A1	2	CONNECTOR, ELEC, C156, C153, Left Hand And Right Hand Aftercut Light, 2-Pin
5	125197C1	2	C155, C154, Left Hand And Right Hand Headlight, 3-Pin
6	225295C1	1	CONNECTOR, ELEC, C225, Plug-In Service Light, 3-Pin
7	NSS	3	NOT SERVICED SEPARATELY, TERMINAL, Chassis Ground
8	NSS	1	NOT SERVICED SEPARATELY, CONNECTOR, C132, Steering Column Harness, 4-Pin
9	225297C1	1	CONNECTOR, ELEC, C142, Steering Column Harness, 3-Pin
10	NSS	1	NOT SERVICED SEPARATELY, CONNECTOR, C131, Steering Column Harness, 3-Pin

PDF created with pdfFactory trial version www.pdffactory.com

04-24 HARNESS, UNLOADER LAMP

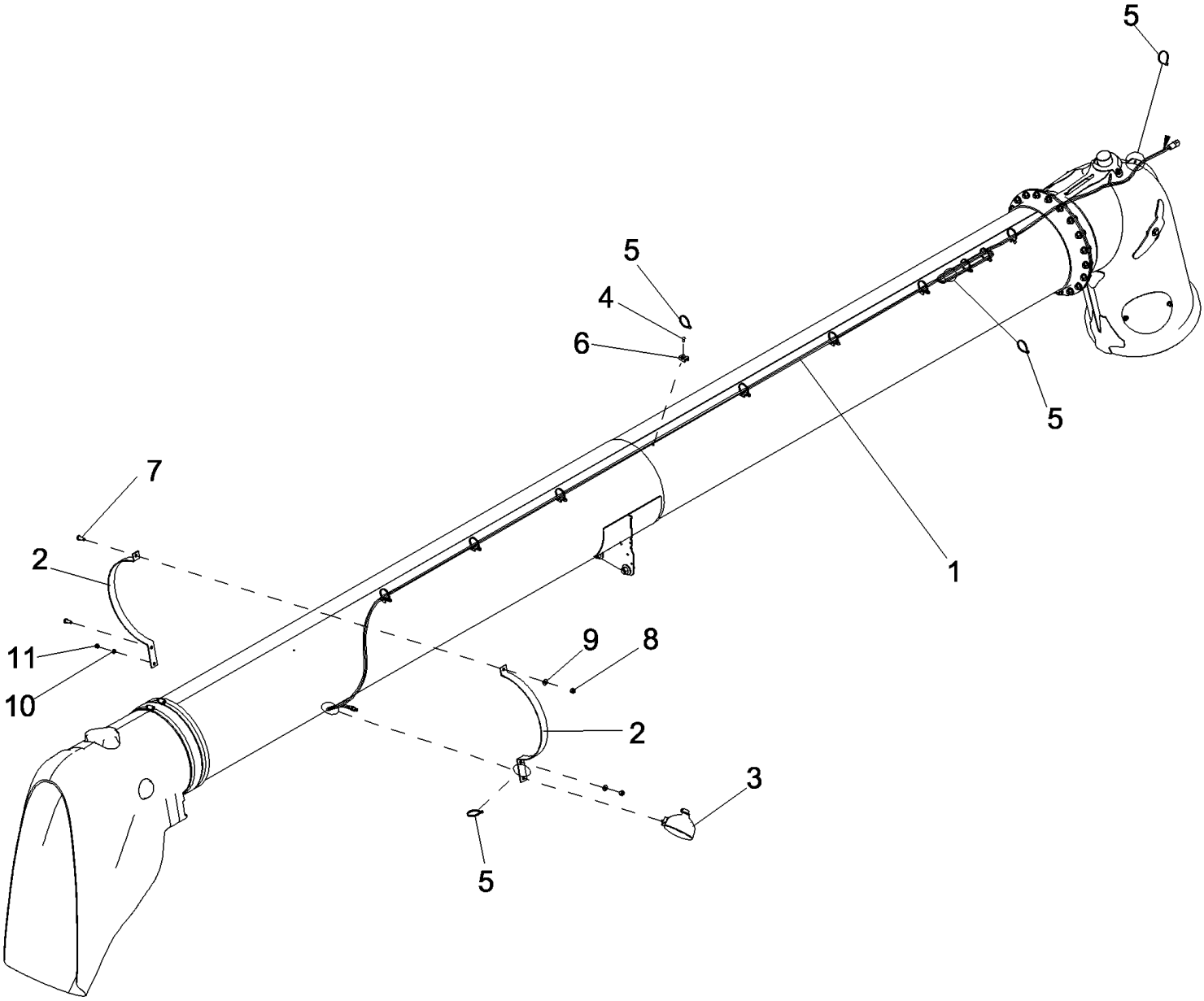

PDF created with pdfFactory trial version www.pdffactory.com

7088 AXIAL-FLOW COMBINE (EU) (4/08-)

04-24 HARNESS, UNLOADER LAMP

ссылка	Номер детали	Кол-во	Описание
1	87727145	1	HARNESS, WIRE, Unloader Tube
2	87553982	2	BRACKET, Unloader Tube
3	87001315	1	LAMP, WORK, Unloader Tube
4	445394	9	RIVET, Pop, M4.8 x 12.7,
5	86566989	13	STRAP, CABLE, M4.75 x 190.5 L,
6	86590413	9	CLAMP,
7	43139	2	BOLT, Hex, M10 x 25, 8.8, Full Thd,
8	100016	2	NUT, M10, Cl 8,
9	140045	2	WASHER, SPRING, Belleville, M10,
10	86511315	1	WASHER, M8 x 16 x 1.6,
11	86629542	1	NUT, LOCK, M8 x 1.25, Cl 8,

PDF created with pdfFactory trial version www.pdffactory.com

04-25 HARNESS, GRAIN TANK WITH MARKER LIGHT

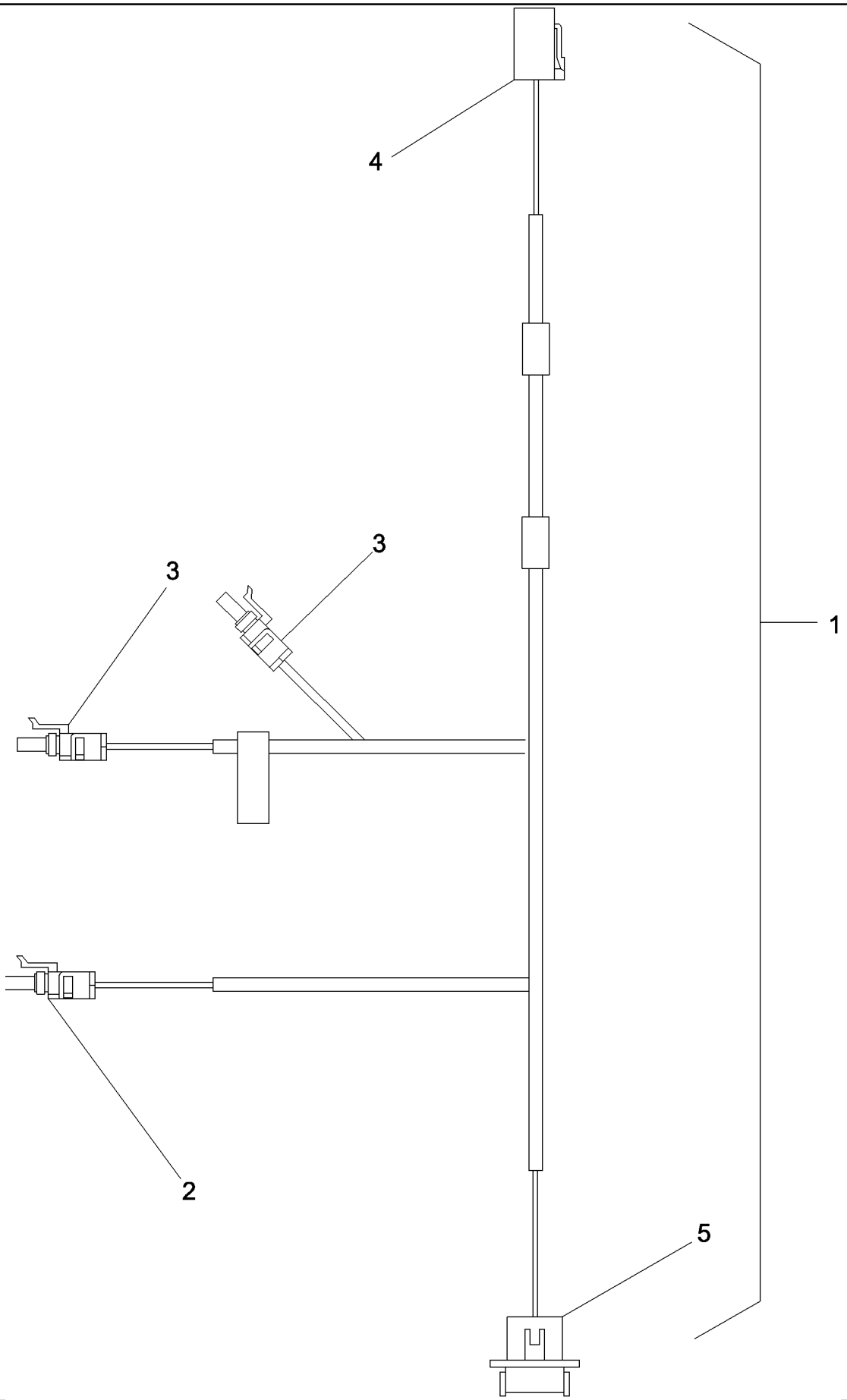

PDF created with pdfFactory trial version www.pdffactory.com

7088 AXIAL-FLOW COMBINE (EU) (4/08-)

04-25 HARNESS, GRAIN TANK WITH MARKER LIGHT

ссылка	Номер детали	Кол-во	Описание
1	87567949	1	HARNESS, WIRE, Grain Tank, Inc. 2 - 5
2	198435A1	1	CONNECTOR, C287, 2-Pin, Grain Tank Light
3	245484C1	2	CONNECTOR, ELEC, C286, C289, 3-Pin, Grain Tank Full, Grain Tank Almost Full
4	NS	1	NOT SERVICED, C288, 4-Pin
5	323464A1	1	CONNECTOR, C174, 12-Pin
6	412064	4	SCREW, Hex, M4 x 16, 8.8, Full Thd,
7	100012	4	NUT, M4, Cl 8,
8	86590413	20	CLAMP,
9	445395	20	RIVET, Pop, M4.8 x 18.1,
10	86566989	25	STRAP, CABLE, M4.75 x 190.5 L,
11	87329757	1	LAMP, 16 Watt
12	87329813	1	BULB, 892, 16 Watt
13	625670	1	GROMMET,

PDF created with pdfFactory trial version www.pdffactory.com

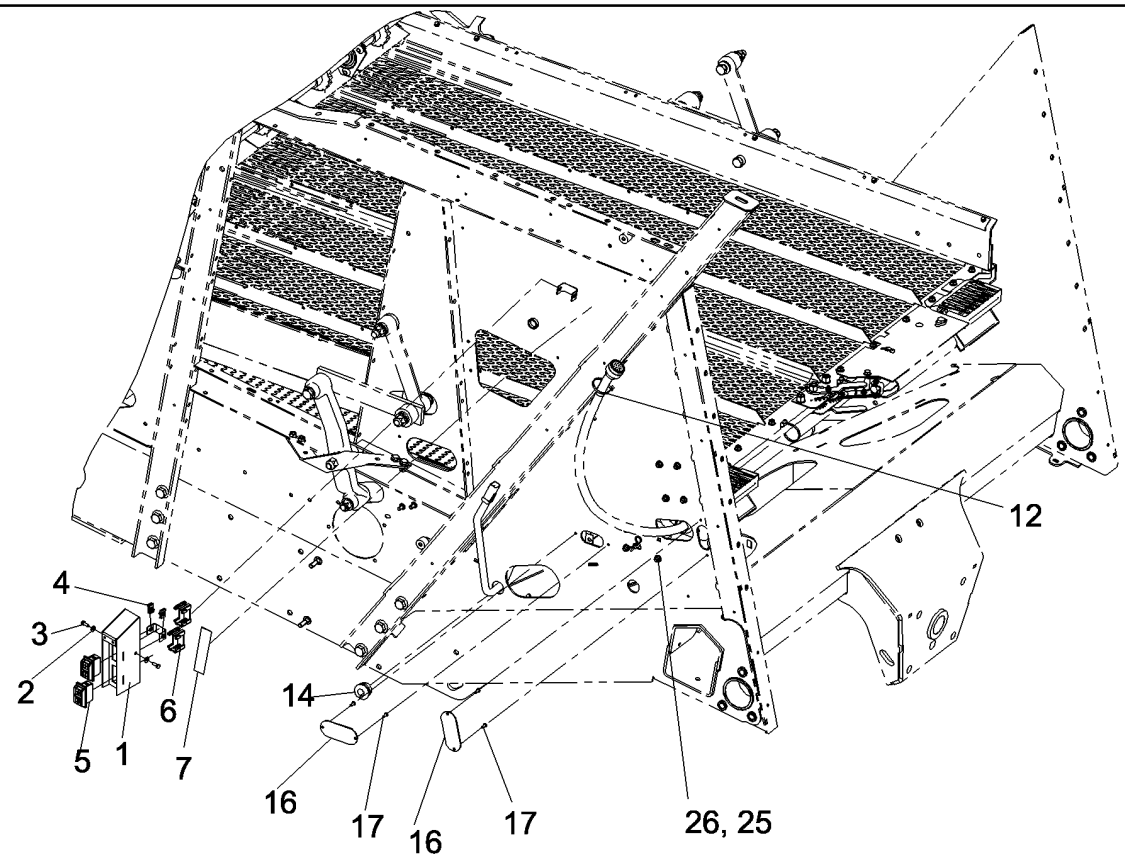

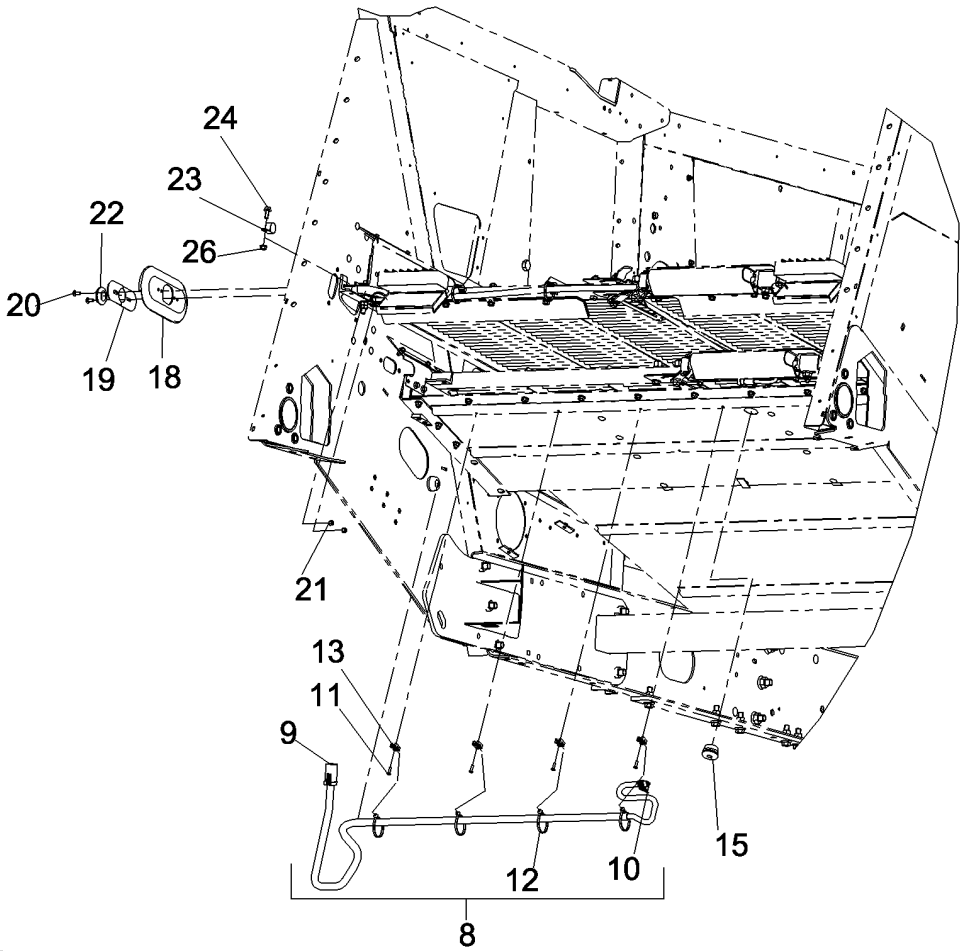

PDF created with pdfFactory trial version www.pdffactory.com

7088 AXIAL-FLOW COMBINE (EU) (4/08-)

04-26 REMOTE SIEVE ADJUSTMENT

ссылка	Номер детали	Кол-во	Описание
1	87011997	1	HOUSING,
2	322357	2	WASHER, SPRING, Belleville, M6,
3	86508568	2	SCREW, Hex, M6 x 16, 8.8,
4	86014250	2	NUT, U, M6 x 1,
5	86627351	2	SWITCH, Remote Adjust
6	86627352	2	CLAMP, Switch
7	87036589	1	DECAL, Remote Adjustment Switch
8	87580679	1	HARNESS, WIRE, Shoe Sieve Control, Inc. 9, 10
9	NSS	1	NOT SERVICED SEPARATELY, Main Sieve Harness, C055, 6 - Pin
10	NSS	1	NOT SERVICED SEPARATELY, Shoe Sieve Motor, C274, 5 - Pin
11	445395	4	RIVET, Pop, M4.8 x 18.1,
12	86566989	5	STRAP, CABLE, M4.75 x 190.5 L,
13	86590413	4	CLAMP,
14	86976974	1	GROMMET,
15	198824C1	1	GROMMET,
16	87389797	2	COVER,
17	445394	4	RIVET, Pop, M4.8 x 12.7,
18	84127513	1	SEAL, COMPOSITE, Cleaning System
19	87495389	2	COVER ASSY,
20	86512439	2	BOLT, CARRIAGE, Short NK, M6 x 16, Cl8.8, Full Thd,
21	832-10406	2	NUT, LOCK, M6 x 1, Cl 8,
22	248-1123	1	GROMMET, 1" ID x 1 3/4" x .062",
23	86637977	1	CLAMP, 1", Insul, 5/16" Bolt,
24	87656137	1	BOLT, Hex Flg, M8 x 20, 10.9, Full Thd,
25	87020310	7	BOLT, Short NK, M8 x 16, Cl 10.9, Full Thd,
26	86507066	8	NUT, M8 x 1.25, Flg, Cl 10,

PDF created with pdfFactory trial version www.pdffactory.com

04-27 HARNESS, ROTOR LIMIT SWITCH

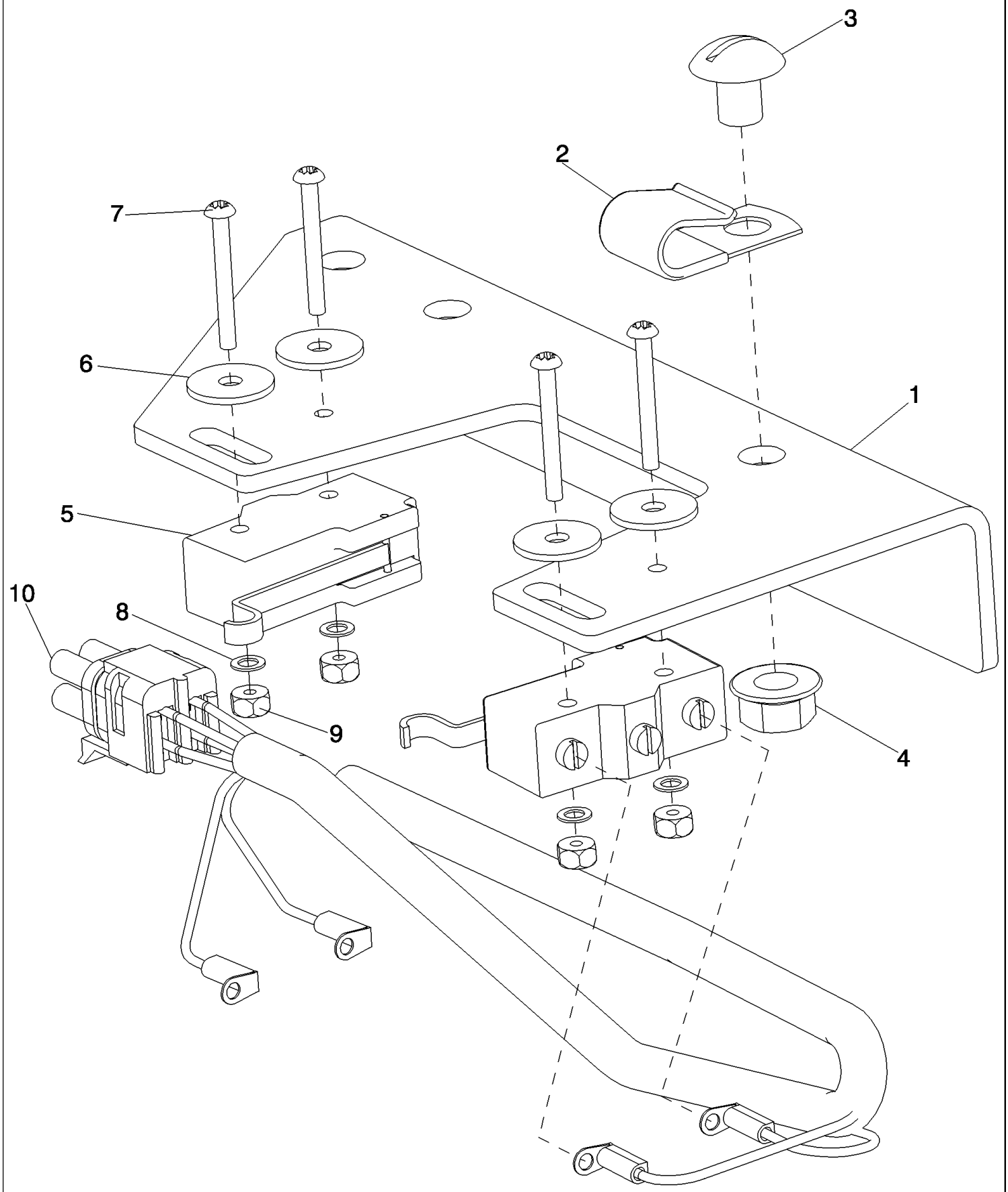

PDF created with pdfFactory trial version www.pdffactory.com

7088 AXIAL-FLOW COMBINE (EU) (4/08-)

04-27 HARNESS, ROTOR LIMIT SWITCH

ссылка	Номер детали	Кол-во	Описание
1	87307513	1	BRACKET, Rotor Speed Limit Switch, 5088
1	249397A1	1	SUPPORT, 3 Speed Rotor Speed Limit Switch, 6088, 7088
2	362120R1	1	CLAMP, Head Lamp Cable Harness
3	477-73808	1	SCREW, Sltd Serr Truss Hd, 3/8"-16 x 1/2",
4	231-5146	1	NUT, Flg, USR, 3/8"-16,
5	128298A2	2	SWITCH, Limit - Simulated Roller
6	495-61020	4	WASHER, 13/64" x 1/2" x .060",
7	440-10620	4	SCREW, Cross Pan Hd, #6-32 x 1 1/4",
8	280384	4	WASHER, LOCK, Int Tooth, #6,
9	230-42406	4	NUT, LOCK, #6-32, GA,
10	245240C1	1	HARNESS, WIRE, Rotor Limit Switch

PDF created with pdfFactory trial version www.pdffactory.com

04-28 HARNESS, GRAIN TANK COVERS

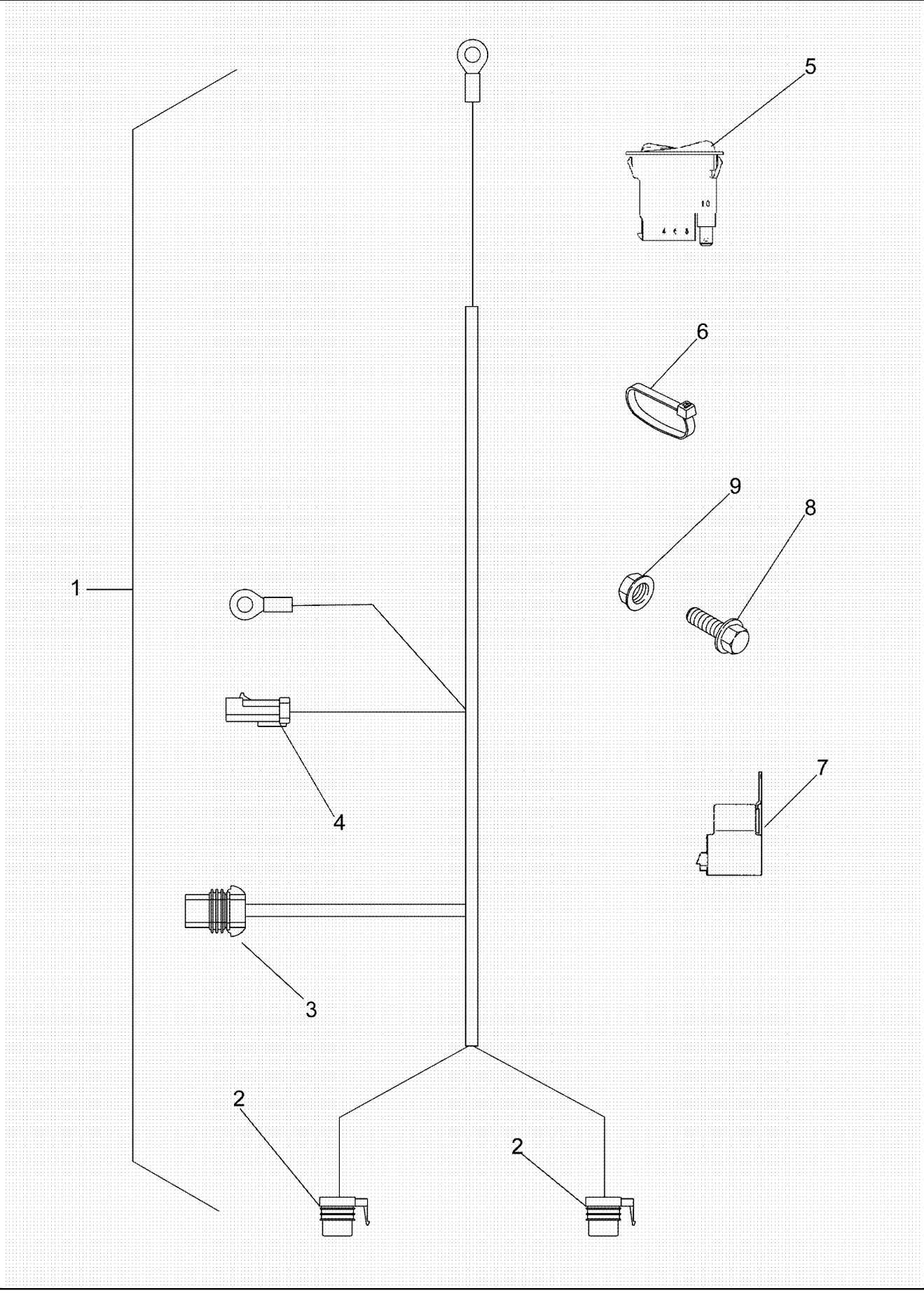

PDF created with pdfFactory trial version www.pdffactory.com

7088 AXIAL-FLOW COMBINE (EU) (4/08-)

04-28 HARNESS, GRAIN TANK COVERS

ссылка	Номер детали	Кол-во	Описание
1	87687016	1	HARNESS, WIRE, Grain Tank Covers, Inc. 2 - 4
2	NSS	2	NOT SERVICED SEPARATELY, CONNECTOR, C324 and C325, Relay A and B
3	182069A1	1	CONNECTOR, C302, Covers Motor
4	NSS	1	NOT SERVICED SEPARATELY, CONNECTOR, C195
5	87641192	2	SWITCH ASSY, Grain Tank Covers
6	86566989	4	STRAP, CABLE, M4.75 x 190.5 L,
7	86508603	2	RELAY, Sealed, With Bracket
8	409-7412	2	BOLT, Hex Flg, 1/4"-20 x 3/4", Serr,
9	231-5144	2	NUT, Flg, USR, 1/4"-20,

PDF created with pdfFactory trial version www.pdffactory.com

04-29 HARNESS, FEEDER

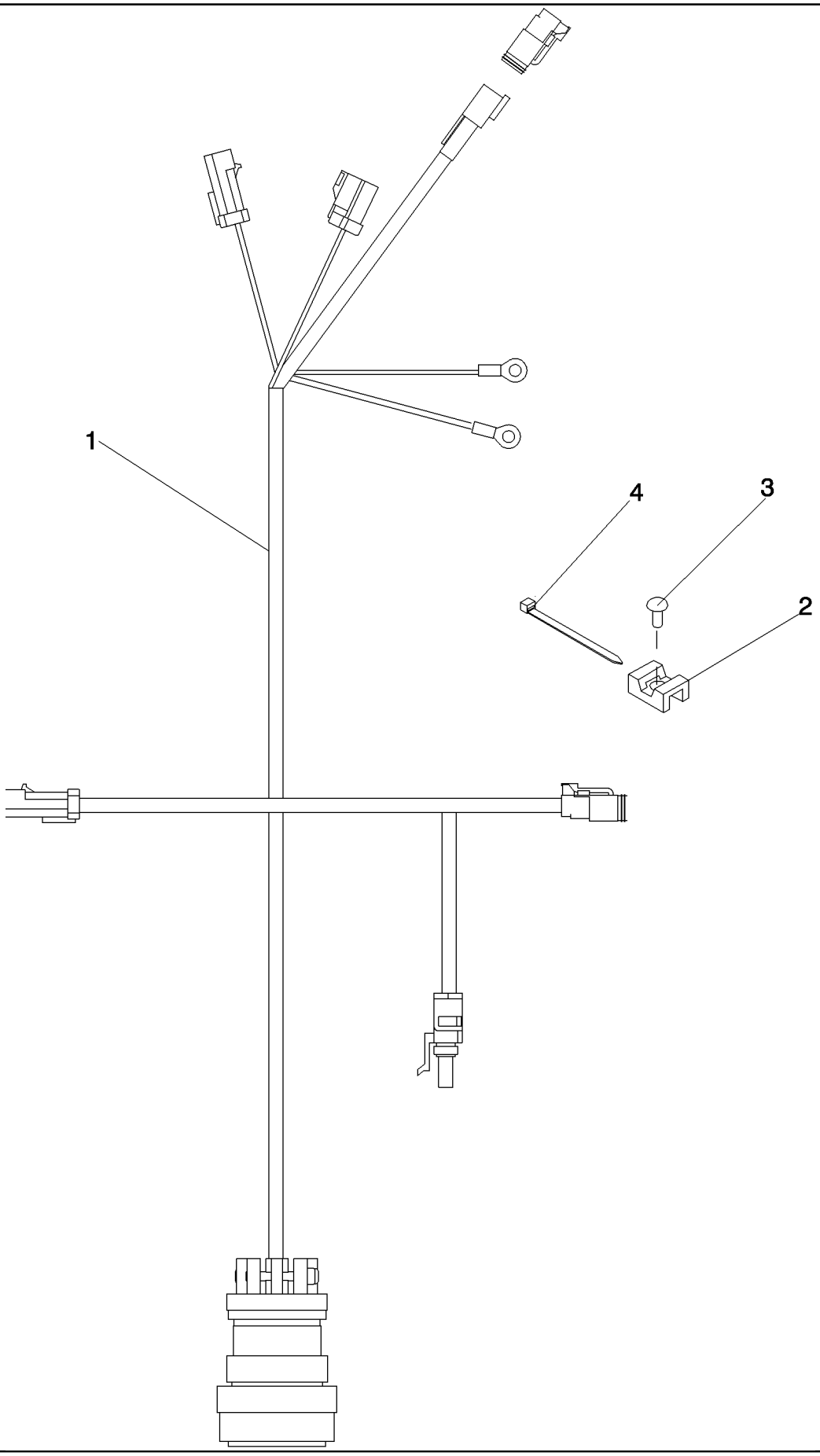

PDF created with pdfFactory trial version www.pdffactory.com

7088 AXIAL-FLOW COMBINE (EU) (4/08-)

04-29 HARNESS, FEEDER

ссылка	Номер детали	Кол-во	Описание
1	87742267	1	HARNESS, WIRE, Feeder
2	86590413	2	CLAMP,
3	445395	2	RIVET, Pop, M4.8 x 18.1,
4	86566989	6	STRAP, CABLE, M4.75 x 190.5 L,

PDF created with pdfFactory trial version www.pdffactory.com

04-30 HARNESS, ELECTRIC TRAILER HITCH, FIXED HOOK RECIEVER

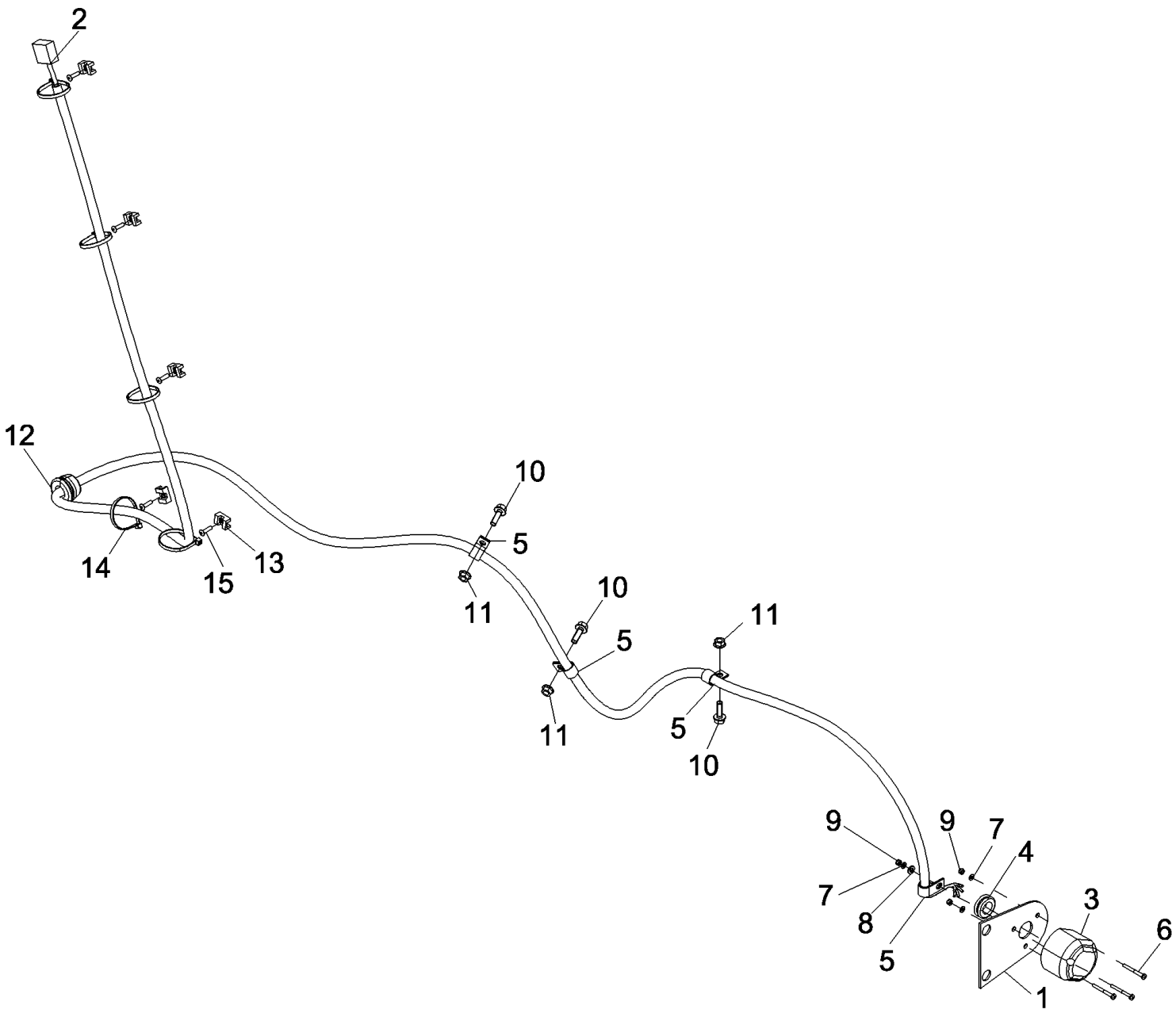

PDF created with pdfFactory trial version www.pdffactory.com

7088 AXIAL-FLOW COMBINE (EU) (4/08-)

04-30 HARNESS, ELECTRIC TRAILER HITCH, FIXED HOOK RECIEVER

ссылка	Номер детали	Кол-во	Описание
1	84432533	1	BRACKET,
2	86604178	1	HARNESS, WIRE, C285, Straw Hood To Trailer Plug
3	398224	1	SOCKET, POWER,
4	102043	1	GROMMET, 3/4" x 1 3/8" x 1 1/16",
5	9706748	4	CLAMP, 5/8", Insul, 5/16" Bolt,
6	86585708	3	SCREW, Cross Pan Hd, M4 x 40,
7	9824840	3	WASHER, M4.3 x 9 x 0.8,
8	86588450	1	WASHER, M6 x 12 x 1.6 Thk,
9	385681	3	NUT, LOCK, M4 x .7, Cl 8,
10	87698833	3	BOLT,
11	86507066	3	NUT, M8 x 1.25, Flg, Cl 10,
12	86976974	1	GROMMET,
13	86590413	5	CLAMP,
14	86566989	5	STRAP, CABLE, M4.75 x 190.5 L,
15	445395	5	RIVET, Pop, M4.8 x 18.1,

PDF created with pdfFactory trial version www.pdffactory.com

04-31 HARNESS, CHAFF SPREADER

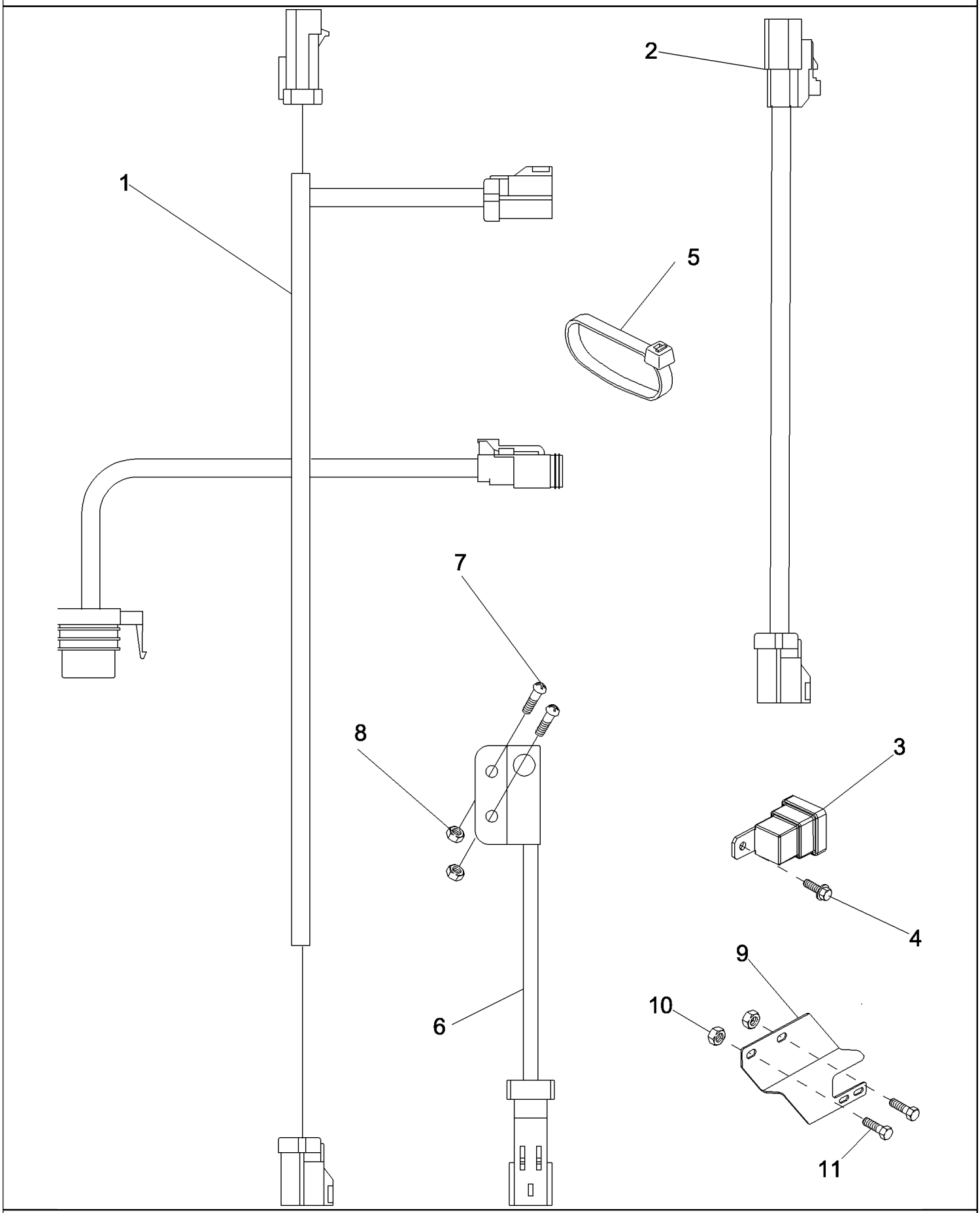

PDF created with pdfFactory trial version www.pdffactory.com

7088 AXIAL-FLOW COMBINE (EU) (4/08-)

04-31 HARNESS, CHAFF SPREADER

ссылка	Номер детали	Кол-во	Описание
1	87712379	1	HARNESS, WIRE, Chaff Spreader
2	87619442	1	HARNESS, Chaff Spreader Tube
3	86508603	1	RELAY,
4	87016553	1	SCREW, SELF TAPPING, Hex Hd, M4.8 x 19,
5	86566989	8	STRAP, CABLE, M4.75 x 190.5 L,
6	87392235	1	SWITCH ASSY, Chaff Spreader
7	440-1108	2	SCREW, Cross Pan Hd, #10-24 x 1/2",
8	231-14109	2	NUT, LOCK, #10-24, GB,
9	87752174	1	BRACKET,
10	87301498	2	NUT,
11	87695418	2	BOLT,

PDF created with pdfFactory trial version www.pdffactory.com

04-32 HARNESS, MIRROR LIGHT

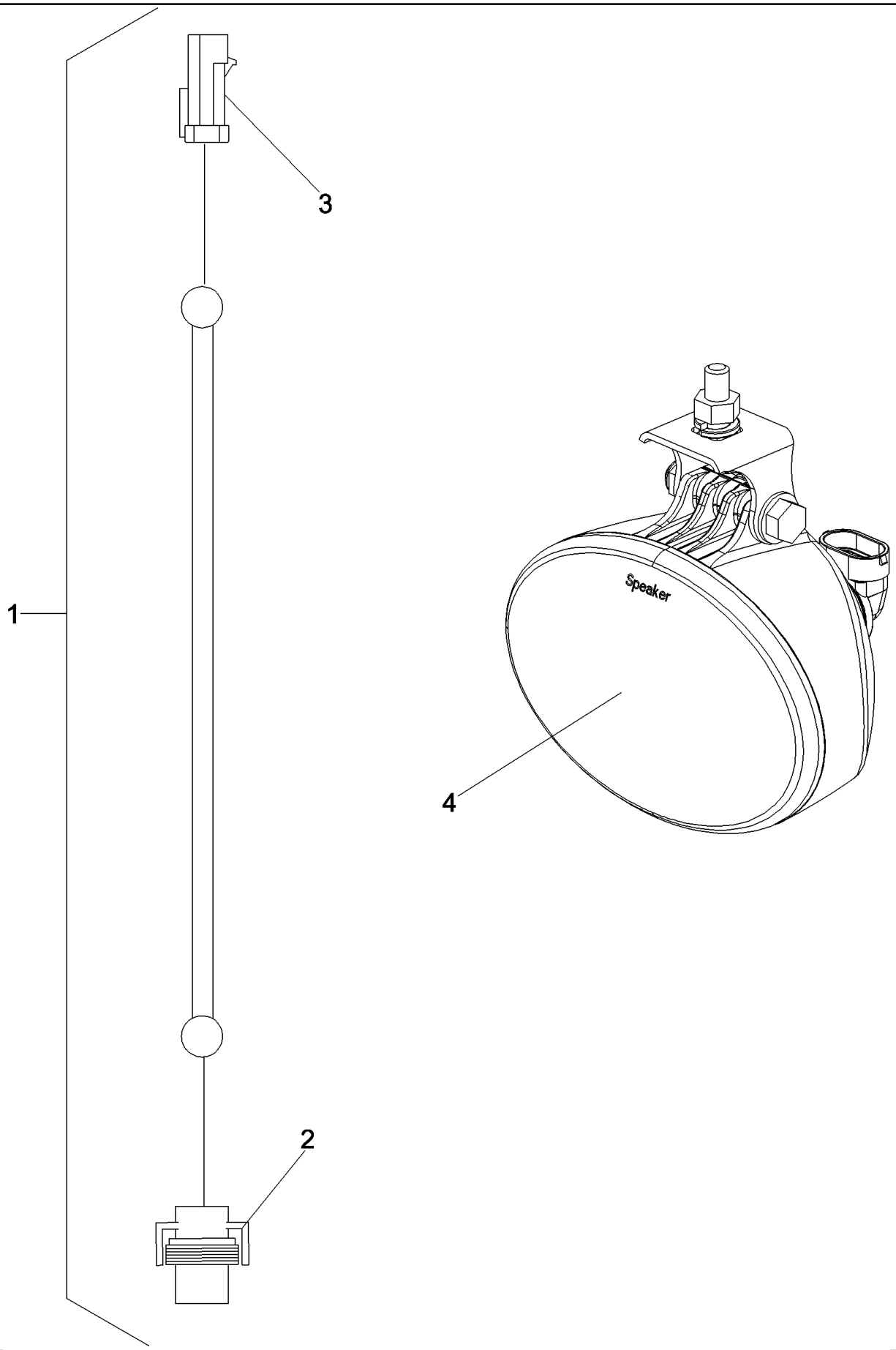

PDF created with pdfFactory trial version www.pdffactory.com

7088 AXIAL-FLOW COMBINE (EU) (4/08-)

04-32 HARNESS, MIRROR LIGHT

ссылка	Номер детали	Кол-во	Описание
1	87595519	2	HARNESS, WIRE, Mirror Light, Inc. 2, 3
2	237661A1	1	CONNECTOR, ELEC, 2-Pin
3	NSS	1	NOT SERVICED SEPARATELY, CONNECTOR, 2-Pin
4	87284332	2	LAMP, WORK,

PDF created with pdfFactory trial version www.pdffactory.com

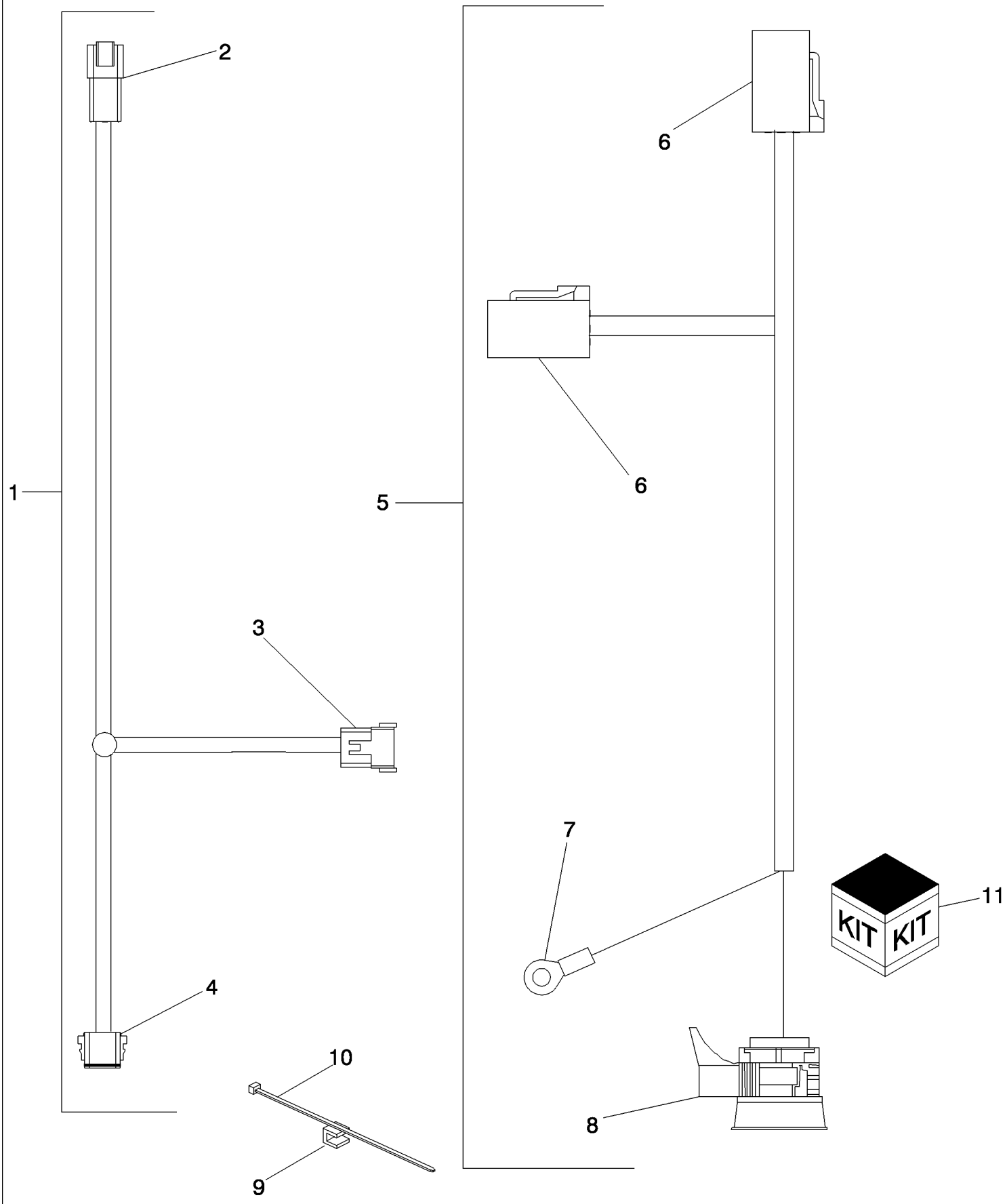

PDF created with pdfFactory trial version www.pdffactory.com

7088 AXIAL-FLOW COMBINE (EU) (4/08-)

04-33 HARNESS, PRECISION FARMING

ссылка	Номер детали	Кол-во	Описание
1	87728918	1	HARNESS, WIRE, Can Flow Sensor, Inc. 2 - 4
2	225326C1	1	CONNECTOR, ELEC, Can Flow Sensor, C250, 4-Pin
3	225400C1	1	CONNECTOR, GPS, C169, 12-Pin
4	225402C1	1	CONNECTOR, External Grain Tank, C173, 12-Pin
5	87389750	1	HARNESS, WIRE, Precision Farming Chassis
6	225351C1	2	CONNECTOR, ELEC, Moisture Sensor, Sample Motor, C251, C252, 4-Pin
7	NSS	1	NOT SERVICED SEPARATELY, TERMINAL, Ground
8	NSS	1	NOT SERVICED SEPARATELY, CONNECTOR, C004, 34-Pin
9	87694057	3	CLIP,
10	306132C1	10	STRAP, CABLE, .30" x 14.5",
11	87707427	1	DIA KIT, HARVESTER, Yield Sensor Install

PDF created with pdfFactory trial version www.pdffactory.com

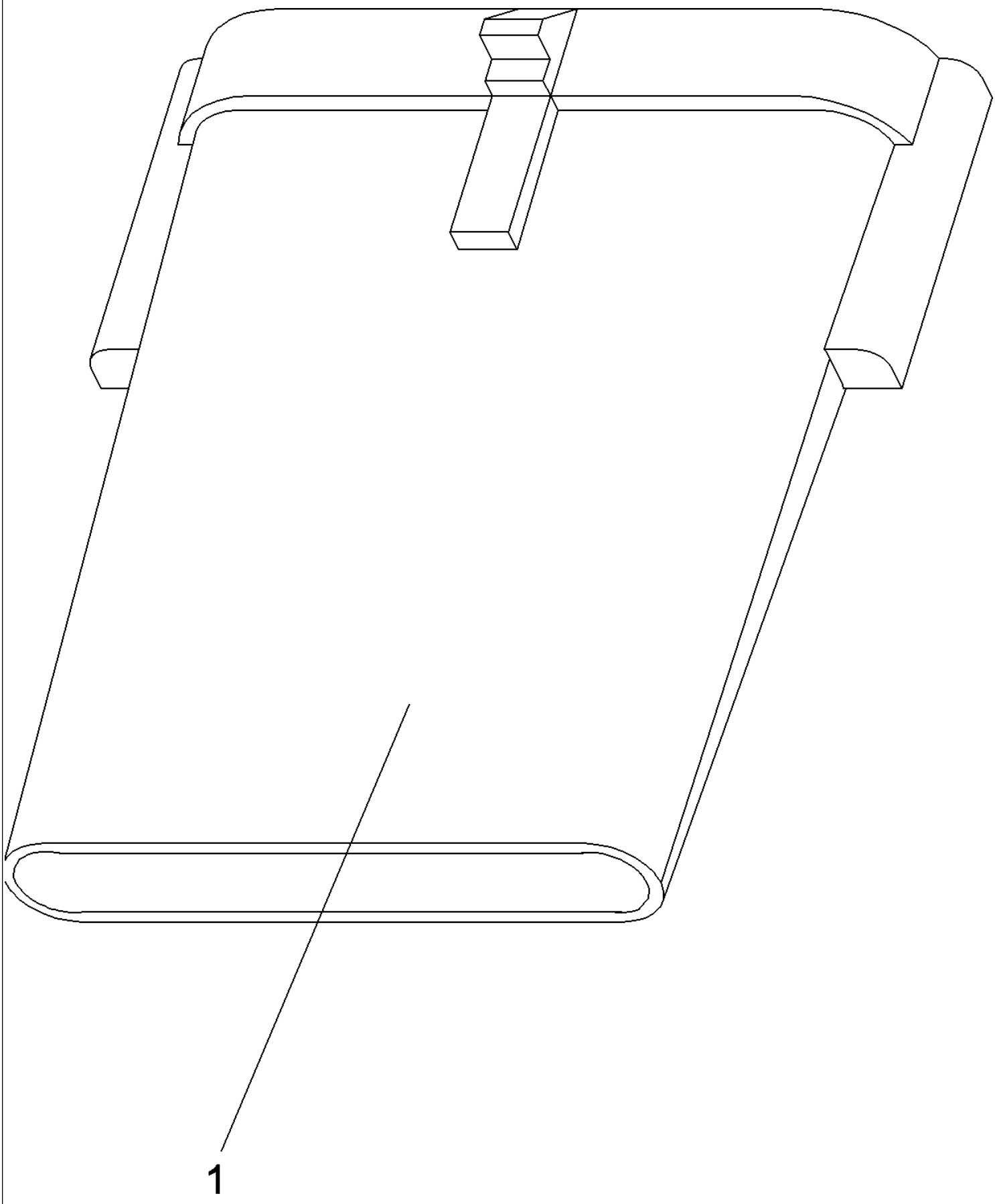

PDF created with pdfFactory trial version www.pdffactory.com

ссылка	Номер детали	Кол-во	Описание
1	228174A1	1	DIODE, Assembled To Main Cab Harness By Fuse Block

PDF created with pdfFactory trial version www.pdffactory.com

04-35 HARNESS, MARKER LIGHT EXTENSION, ITALIAN ONLY

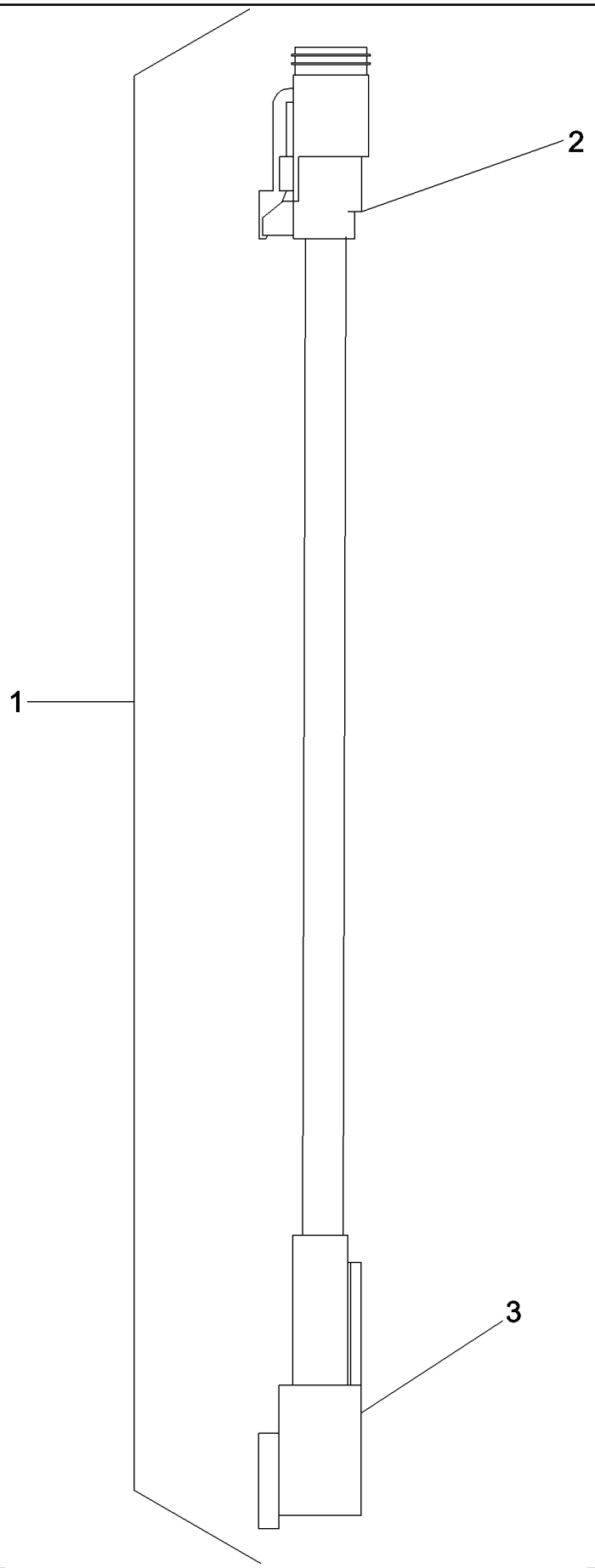

PDF created with pdfFactory trial version www.pdffactory.com

7088 AXIAL-FLOW COMBINE (EU) (4/08-)

04-35 HARNESS, MARKER LIGHT EXTENSION, ITALIAN ONLY

ссылка	Номер детали	Кол-во	Описание
1	87594456	2	HARNESS, WIRE, Marker Light Extension
2	225316C1	1	CONNECTOR, ELEC, Marker Light
3	225315C1	1	CONNECTOR, ELEC, Platform Harness

PDF created with pdfFactory trial version www.pdffactory.com

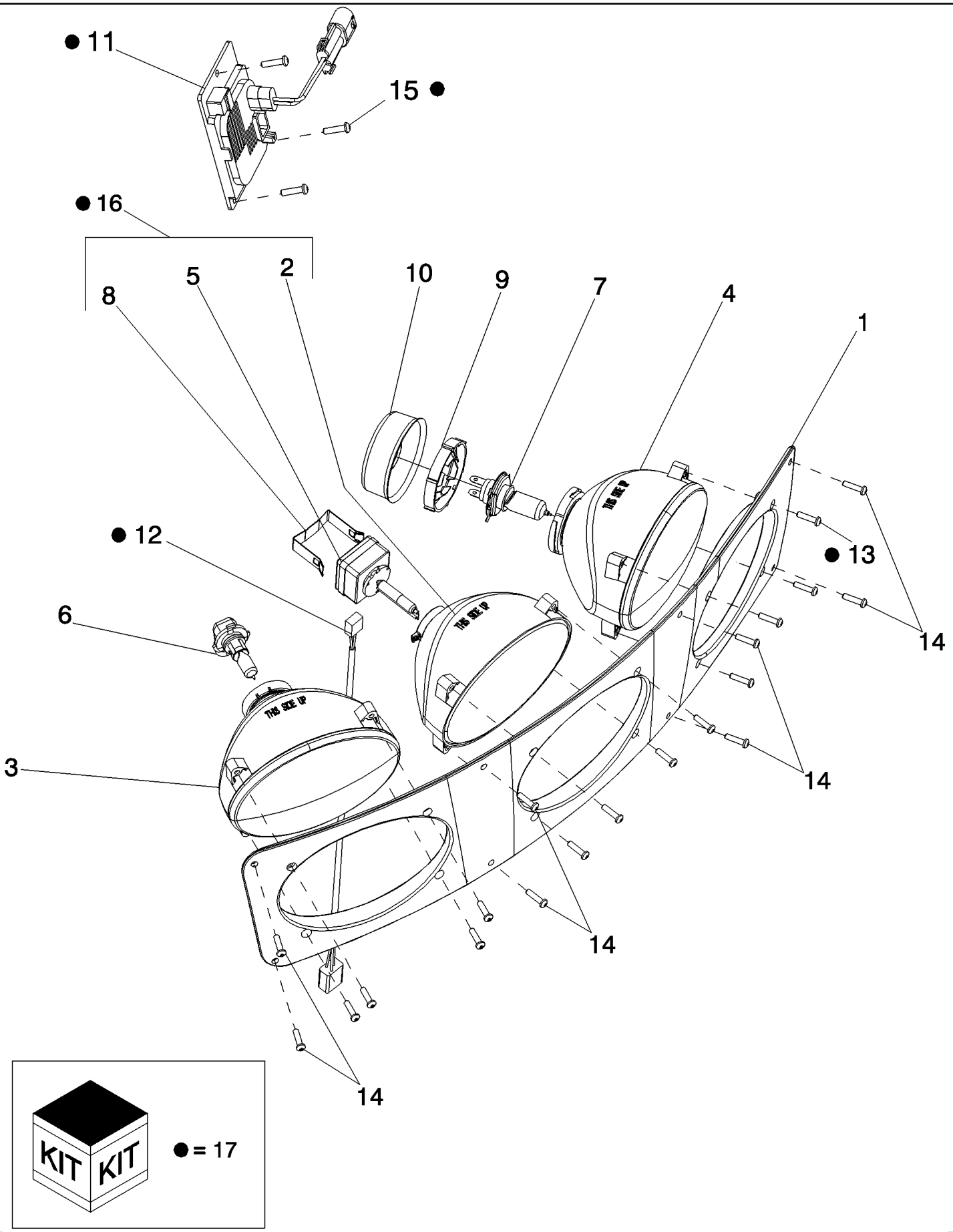

PDF created with pdfFactory trial version www.pdffactory.com

7088 AXIAL-FLOW COMBINE (EU) (4/08-)

04-36 CAB WORK LIGHTS - HID

ссылка	Номер детали	Кол-во	Описание
1	87679840	1	BEZEL, Cab Work Light, Right Hand
1	87679844	1	BEZEL, Cab Work Light, Left Hand
2	87106354	2	HEADLAMP, 7110WF - HID
3	87106353	2	HEADLAMP, 7110F_9005
4	87106352	2	HEADLAMP, 7110T - H4
5	87722023	2	BULB, HID
6	87106291	2	BULB, 9005 - 12V
7	87283179	2	BULB, H4 - 12V
8	87106287	2	CLIP,
9	87106302	2	COLLAR,
10	87106301	2	SEAL,
11	87722022	2	BALLAST, GEN 5, 4 Pin Mount, 12V
12	87722021	2	HARNESS, WIRE, HID
13	87106305	24	SCREW,
14	260-16512	16	SCREW, SELF TAPPING, Cross Pan Hd, #10 x 3/4",
15	191216A1	6	SCREW, SELF TAPPING, Hex Wash Hd, #10-24 x 5/8",
16	87735805	2	HEADLAMP, HID, Inc. 2, 5, 8
17	87708975	1	KIT, SERVICE, DIA, Cab Work Light-HID, Inc. 11, 12, 13 (qty 8), 15, 16

PDF created with pdfFactory trial version www.pdffactory.com

7088 AXIAL-FLOW COMBINE (EU) (4/08-)

04-36A CAB WORK LIGHTS - HID DELUXE (IF EQUIPPED)

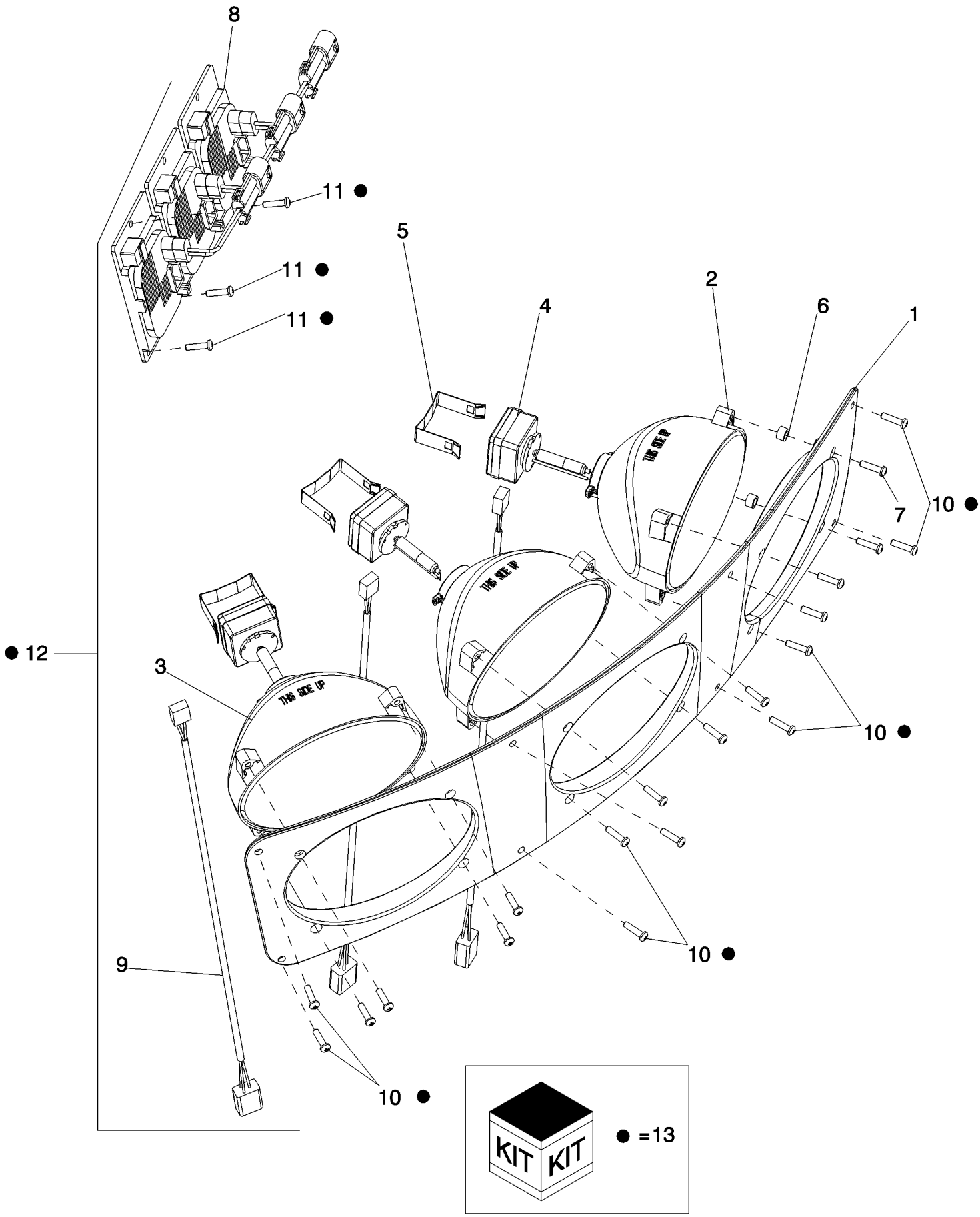

PDF created with pdfFactory trial version www.pdffactory.com

7088 AXIAL-FLOW COMBINE (EU) (4/08-)

04-36A CAB WORK LIGHTS - HID DELUXE (IF EQUIPPED)

ссылка	Номер детали	Кол-во	Описание
1	87679840	1	BEZEL, Cab Work Light, Right Hand
1	87679844	1	BEZEL, Cab Work Light, Left Hand
2	87693262	2	LIGHT ASSY., Trap - HID
3	87106354	4	HEADLAMP, 7110WF - HID
4	87722023	6	BULB, HID
5	87106287	6	CLIP,
6	87704446	4	SPACER,
7	87106305	24	SCREW,
8	87722022	6	BALLAST, GEN 5, 4 Pin Mount, 12V
9	87722021	6	HARNESS, WIRE, HID
10	260-16512	16	SCREW, SELF TAPPING, Cross Pan Hd, #10 x 3/4",
11	191216A1	18	SCREW, SELF TAPPING, Hex Wash Hd, #10-24 x 5/8",
12	87693085	1	LIGHT ASSY., Cab Roof, Right Hand, HID Deluxe, Inc. 1-9
12	87693086	1	LIGHT ASSY., Cab Roof, Left Hand, HID Deluxe, Inc. 1-9
13	87737628	1	KIT, SERVICE, DIA, Cab Work Light, HID Deluxe, Inc. 10-12

PDF created with pdfFactory trial version www.pdffactory.com

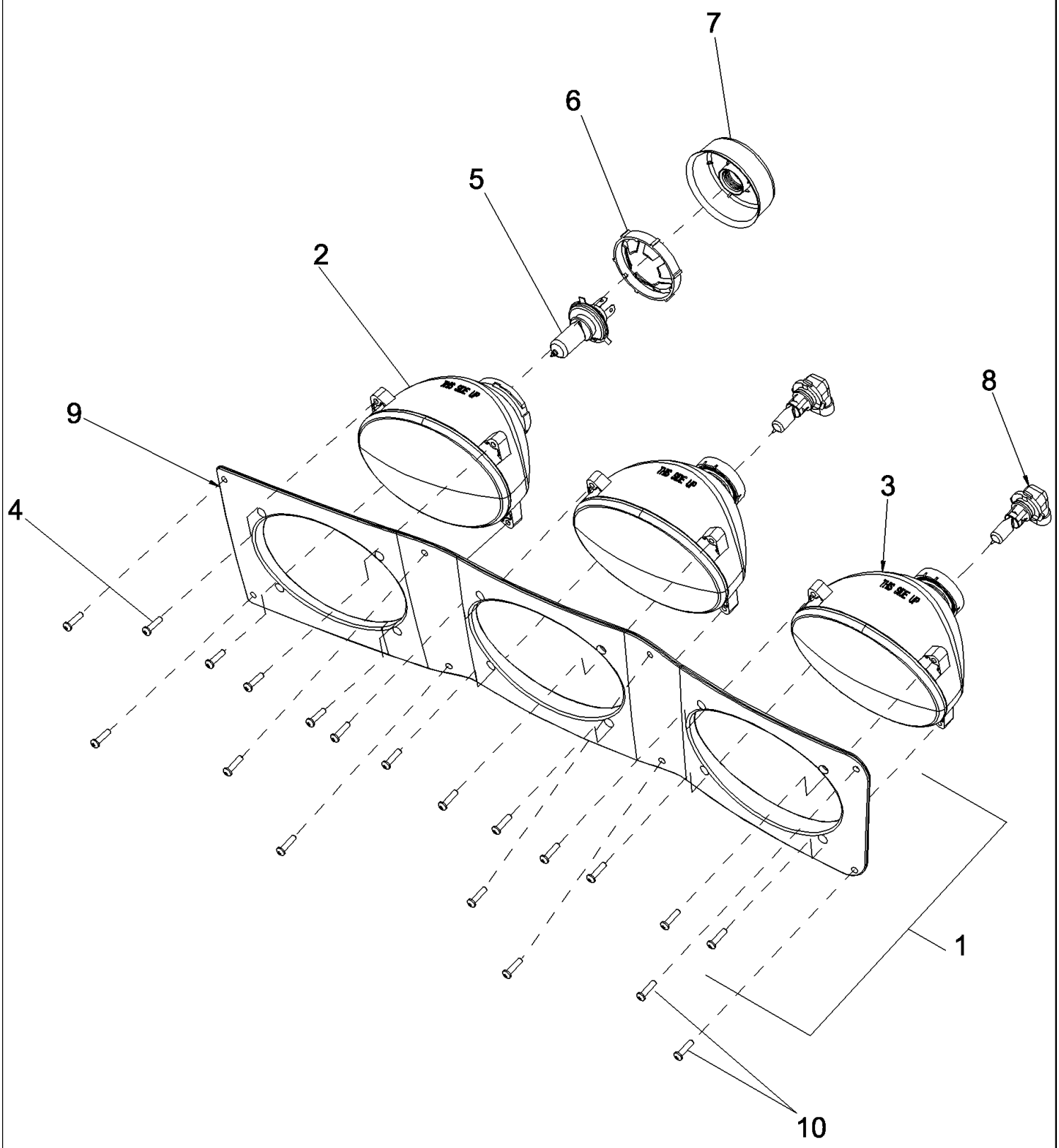

PDF created with pdfFactory trial version www.pdffactory.com

7088 AXIAL-FLOW COMBINE (EU) (4/08-)

04-37 CAB WORK LIGHTS - HALOGEN

ссылка	Номер детали	Кол-во	Описание
1	87313211	1	LIGHT ASSY., Cab Left Hand, Halogen, Inc. 2 - 9
1	87313210	1	LIGHT ASSY., Cab Right Hand, Halogen, Inc. 2 - 9
2	87106352	1	HEADLAMP, 7110T-H4
3	87106353	2	HEADLAMP, 7110F_9005
4	87106305	12	SCREW,
5	87283179	1	BULB, H4-12V
6	87106302	1	COLLAR,
7	87106301	1	SEAL,
8	87106291	2	BULB, 9005-12V
9	87679844	1	BEZEL, Cab Work Light, Left Hand
9	87679840	1	BEZEL, Cab Work Light, Right Hand
10	260-16512	16	SCREW, SELF TAPPING, Cross Pan Hd, #10 x 3/4",

PDF created with pdfFactory trial version www.pdffactory.com

04-38 LIGHTS, FRONT

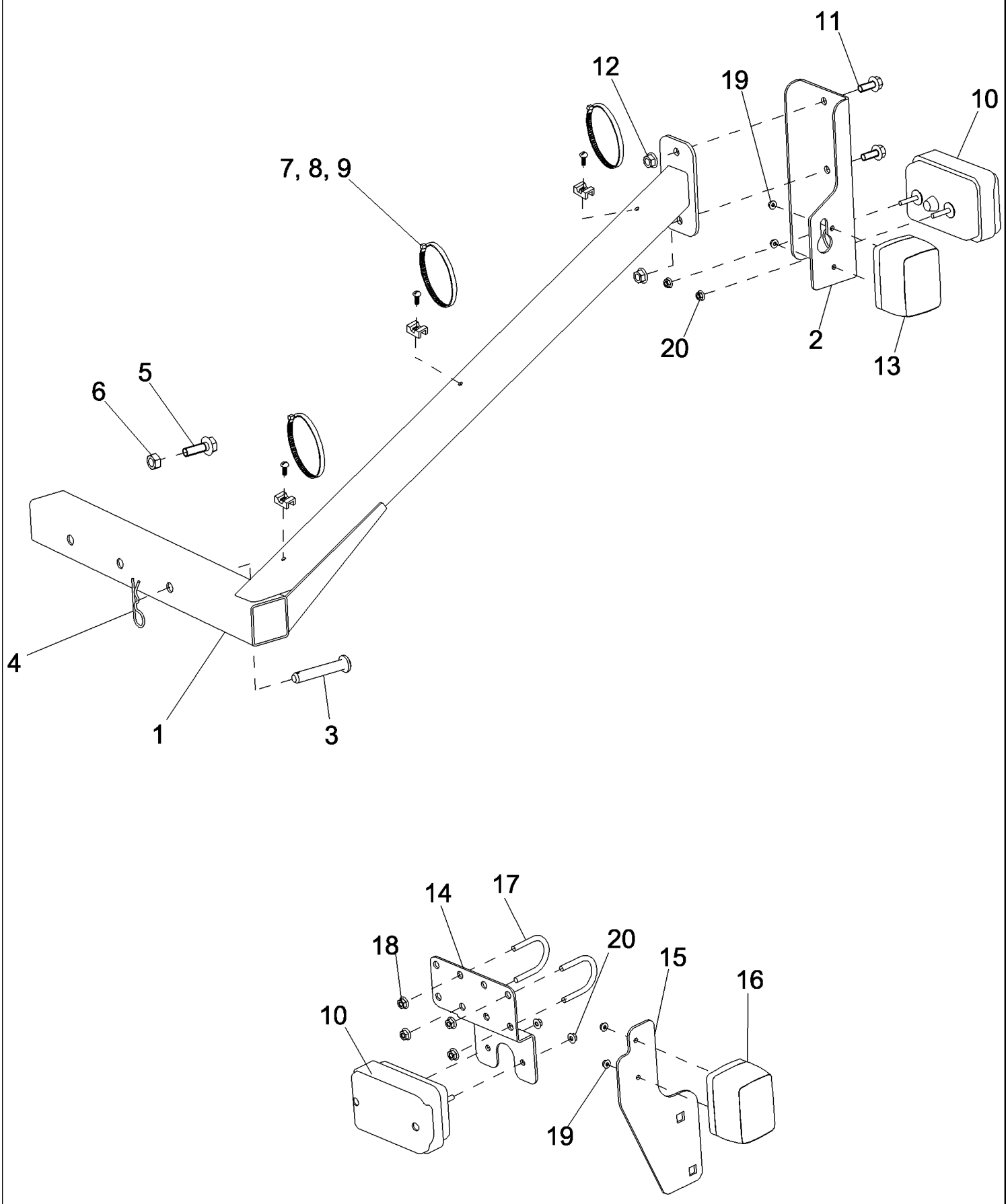

PDF created with pdfFactory trial version www.pdffactory.com

7088 AXIAL-FLOW COMBINE (EU) (4/08-)

04-38 LIGHTS, FRONT

ссылка	Номер детали	Кол-во	Описание
1	87711903	1	BRACKET, Turn Signal
2	87635363	1	BRACKET, Right Hand Turn Light
3	87035064	1	PIN, CLEVIS, M12 x 70,
4	610784R1	1	SPLIT PIN/SAFETY PIN,
5	87698837	1	BOLT,
6	86500689	1	NUT, M10, Cl 10,
7	86590413	3	CLAMP,
8	445395	3	RIVET, Pop, M4.8 x 18.1,
9	289862C1	3	STRAP, CABLE, 3/16" x 7",
10	87620727	2	LAMP, WORK, Front
11	87656137	2	BOLT, Hex Flg, M8 x 20, 10.9, Full Thd,
12	86507066	2	NUT, M8 x 1.25, Flg, Cl 10,
13	84067995	1	LAMP ASSY, SIDE, Right Hand
14	87479303	1	BRACKET, Left Hand Combo Light
15	87472260	1	BRACKET, Left Hand Turn Signal
16	84067994	1	LAMP ASSY, SIDE, Left Hand
17	87703800	2	U-BOLT,
18	87301498	4	NUT,
19	87301238	4	NUT,
20	825-2405	4	NUT, M5 x .8, Flg, Cl 8,

PDF created with pdfFactory trial version www.pdffactory.com

04-39 LIGHTS, REAR

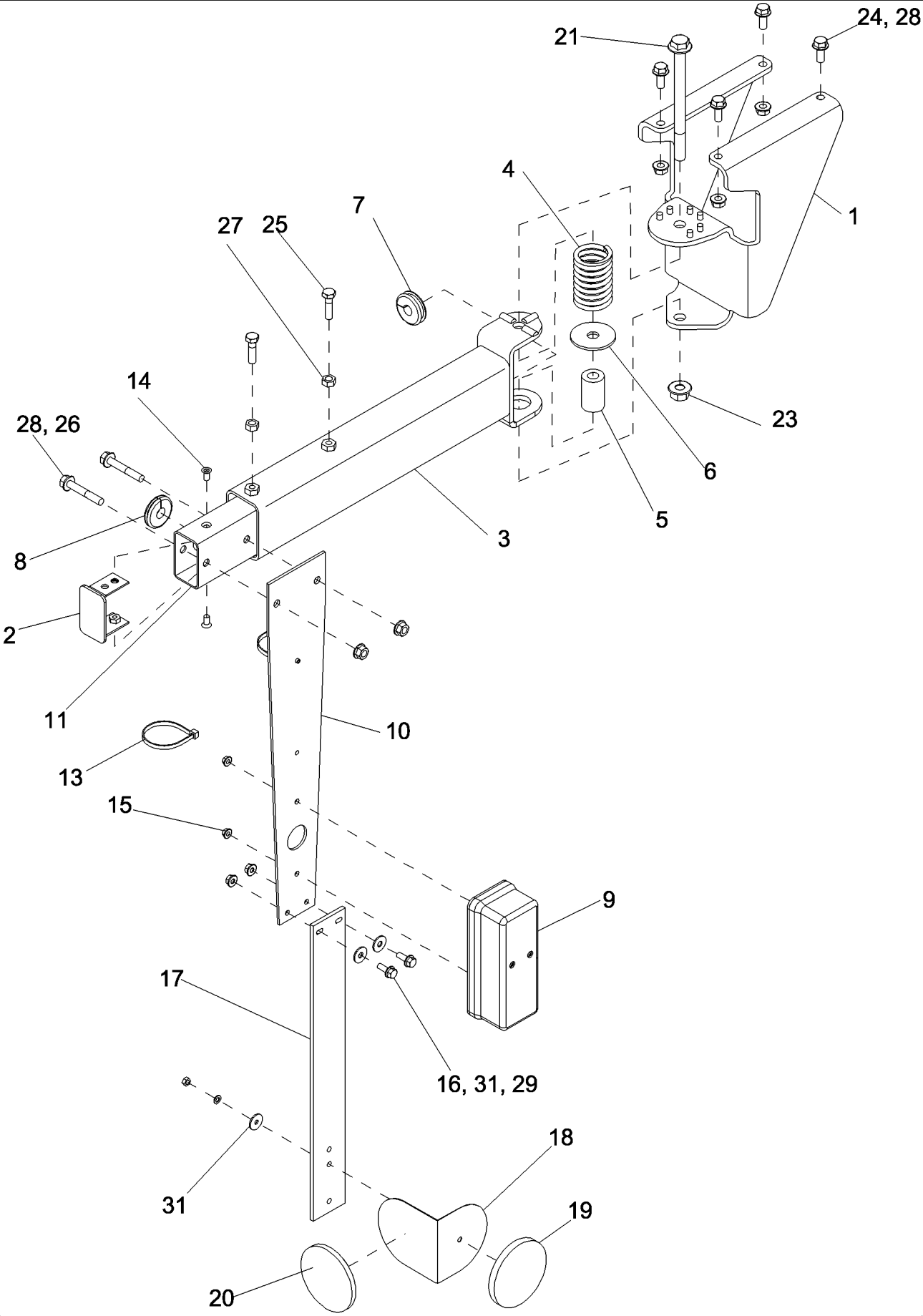

PDF created with pdfFactory trial version www.pdffactory.com

7088 AXIAL-FLOW COMBINE (EU) (4/08-)

04-39 LIGHTS, REAR

ссылка	Номер детали	Кол-во	Описание
1	87638940	2	BRACKET, Rear Left Hand Warning Arm
2	87284717	2	BRACKET,
3	87284265	2	ARM, Supporting
4	87283260	2	SPRING,
5	87283257	2	SPACER,
6	87026355	2	WASHER, M12 x 50 x 3, HT,
7	87015294	2	GROMMET, 1/2" ID x 1 3/4" Groove Dia, Str Cut,
8	87015293	2	GROMMET, 1/2" ID x 1 1/4" Groove Dia, Str Cut,
9	87691270	2	LAMP, WORK, Stop/Tail/Turn
10	87001252	2	PLATE,
11	87001250	2	EXTENSION,
13	86566990	4	STRAP, CABLE, M4.8 x 292 L,
14	87698753	4	BOLT,
15	86507064	4	NUT,
16	86050276	4	BOLT, Hex, M5 x 16, 8.8, Full Thd,
17	84442354	2	SUPPORT, Arm
18	84158104	2	BRACKET,
19	470023	2	REFLECTOR, Red
20	435895	2	REFLECTOR, Amber
21	87030021	2	BOLT, Hex Flg, M12 x 150, 10.9,
23	87681209	2	NUT,
24	87656137	8	BOLT, Hex Flg, M8 x 20, 10.9, Full Thd,
25	43128	4	BOLT, Hex, M8 x 30, 8.8,
26	87698763	4	BOLT,
27	9706690	4	NUT, M8, Cl 8,
28	86507066	12	NUT, M8 x 1.25, Flg, Cl 10,
29	43440	4	NUT, LOCK, M5 x .8, Cl 8,
31	495-61020	6	WASHER, 13/64" x 1/2" x .060",

PDF created with pdfFactory trial version www.pdffactory.com

04-40 LIGHT, UNLOADER TUBE SIGNAL PLATE

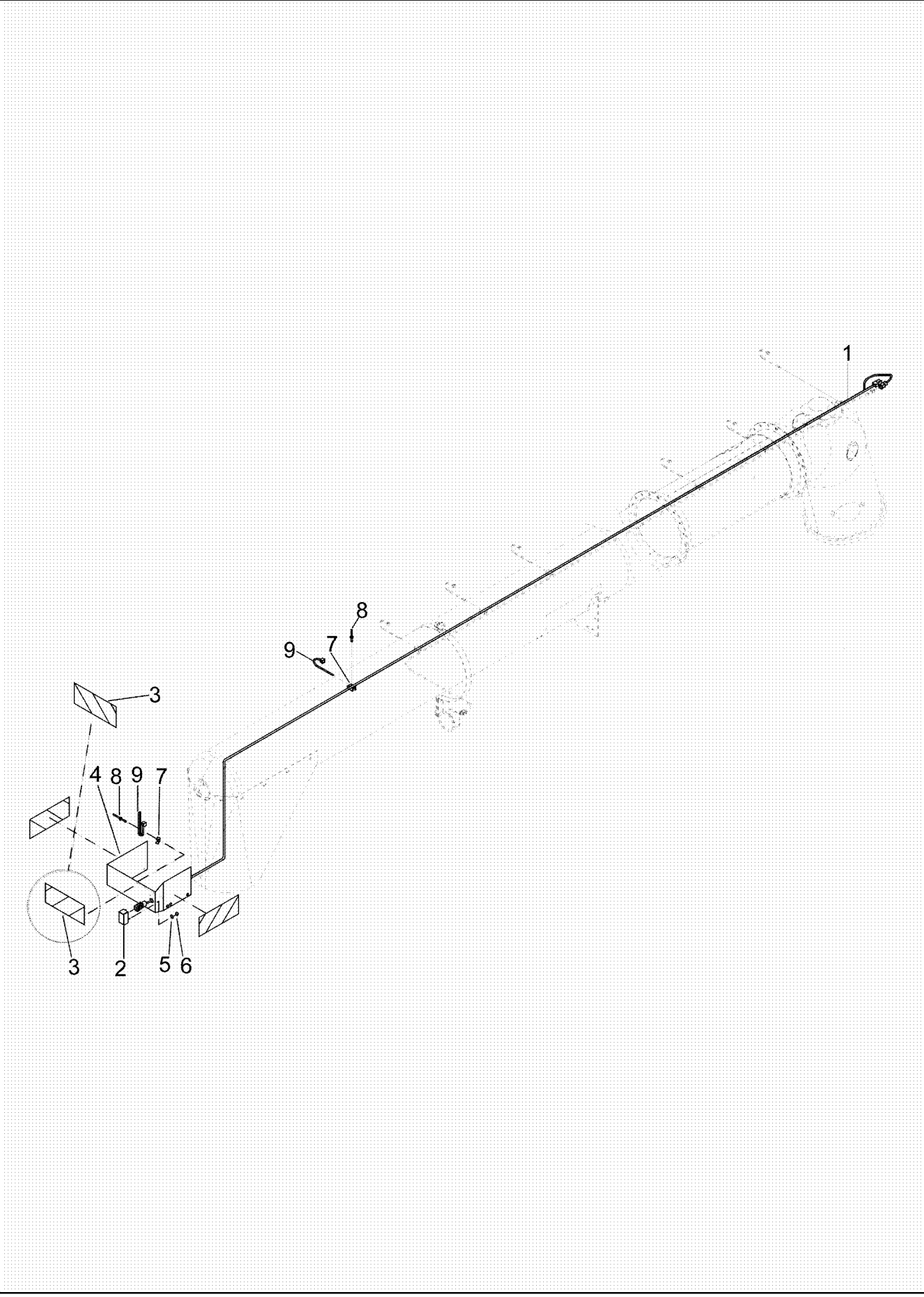

PDF created with pdfFactory trial version www.pdffactory.com

7088 AXIAL-FLOW COMBINE (EU) (4/08-)

04-40 LIGHT, UNLOADER TUBE SIGNAL PLATE

ссылка	Номер детали	Кол-во	Описание
1	86610718	1	HARNESS, WIRE,
2	84429842	1	LAMP,
3	84441358	3	DECAL,
4	84452652	1	SUPPORT,
5	140014	2	WASHER, M5 x 10 x 1,
6	43440	2	NUT, LOCK, M5 x .8, Cl 8,
7	86590413	2	CLAMP,
8	325911	2	RIVET, Pop, M4.8 x 7.4,
9	86566989	2	STRAP, CABLE, M4.75 x 190.5 L,

PDF created with pdfFactory trial version www.pdffactory.com

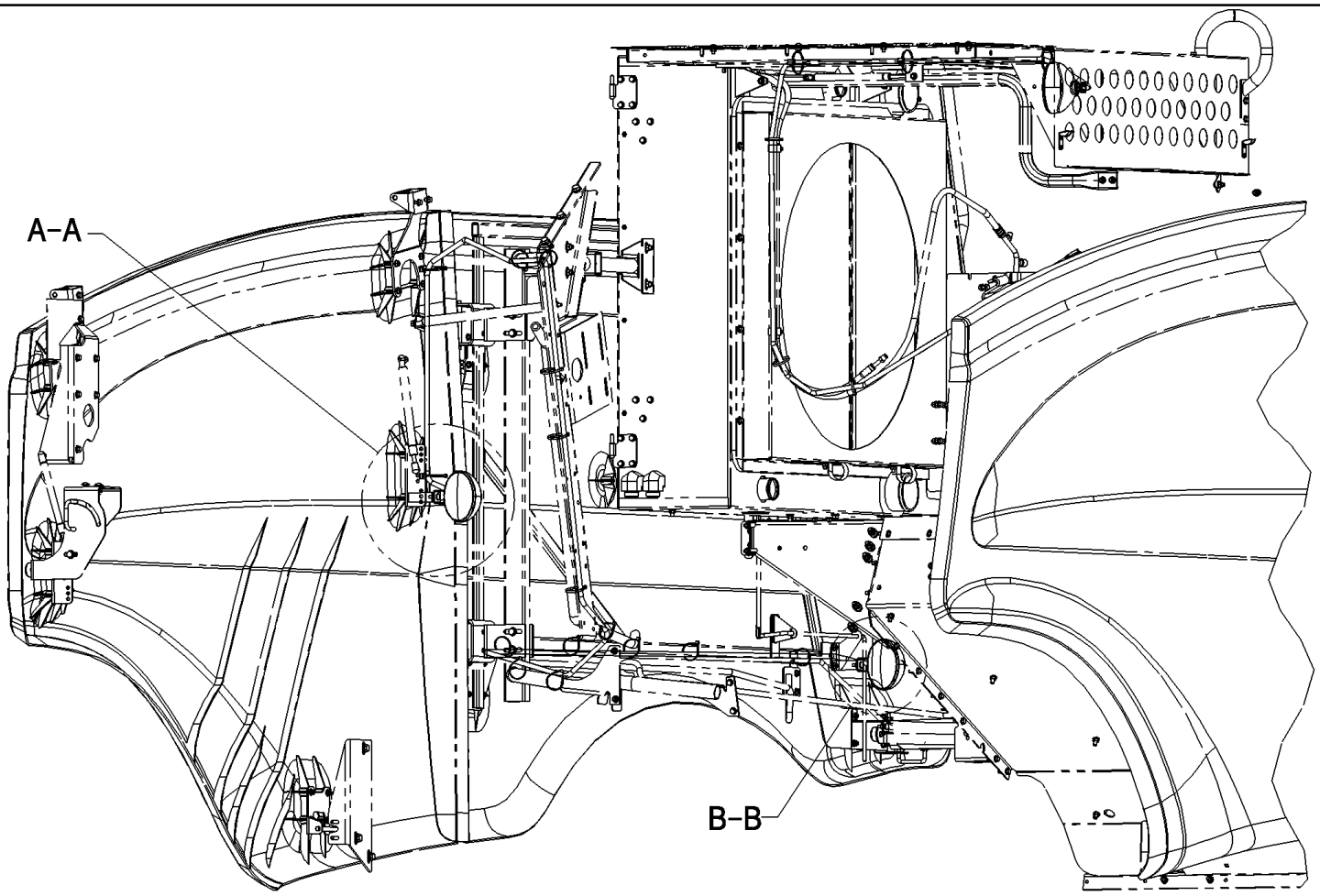

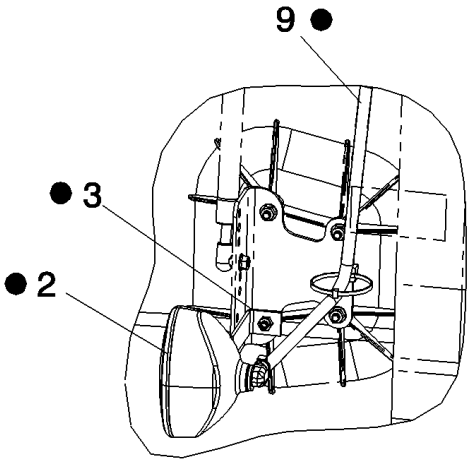

A-A

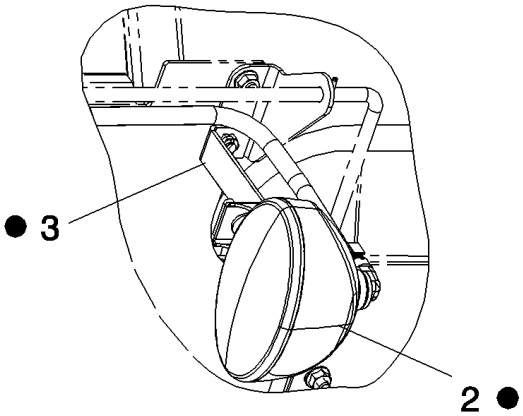

B-B

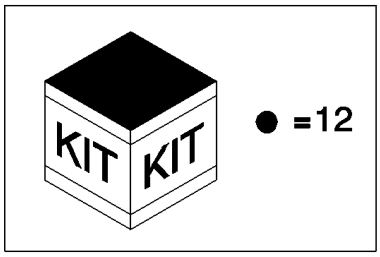

PDF created with pdfFactory trial version www.pdffactory.com

7088 AXIAL-FLOW COMBINE (EU) (4/08-)

04-41(1) LIGHTING, UNDERPANEL

ссылка	Номер детали	Кол-во	Описание
1	87105346	1	BRACKET,
2	87001315	6	LAMP, WORK,
3	183629A1	2	SUPPORT, After Cut Light
4	391062A1	2	SWITCH,
5	87015175	1	DECAL, Light Switch
6	87013946	1	DECAL, Light Switch
7	87694057	14	CLIP,
8	87676251	1	HARNESS, WIRE, Underpanel Lights, Left Hand
9	87676253	1	HARNESS, WIRE, Underpanel Lights, Right Hand
10	87676254	1	HARNESS, WIRE, Engine Light
11	86566989	16	STRAP, CABLE, M4.75 x 190.5 L,
12	87726839	1	DIA KIT, HARVESTER, Underpanel Lighting, Inc. 1-11

PDF created with pdfFactory trial version www.pdffactory.com

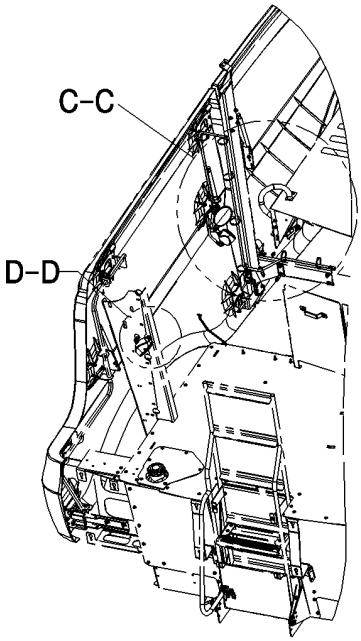

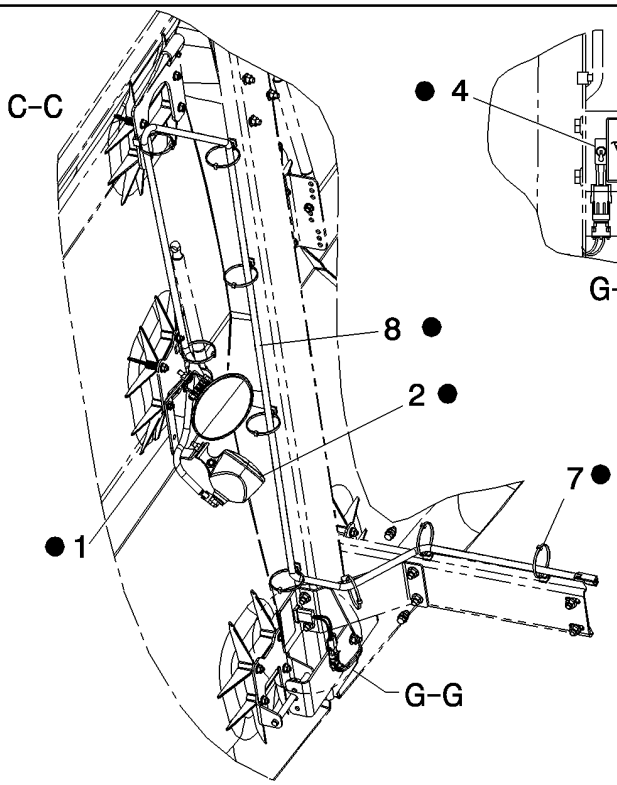

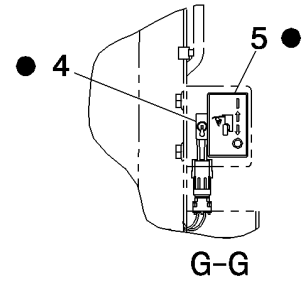

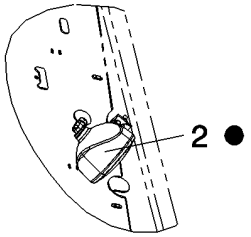

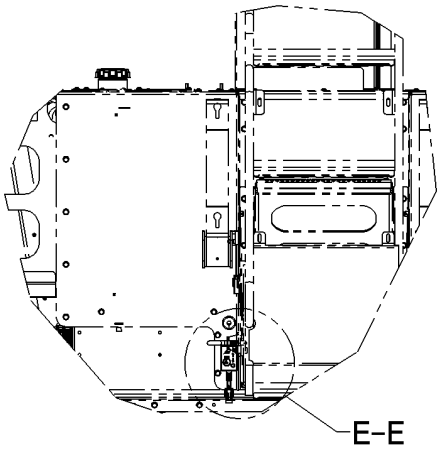

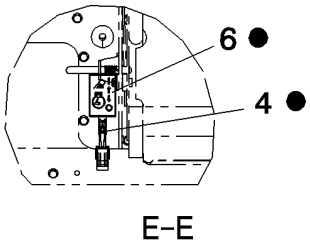

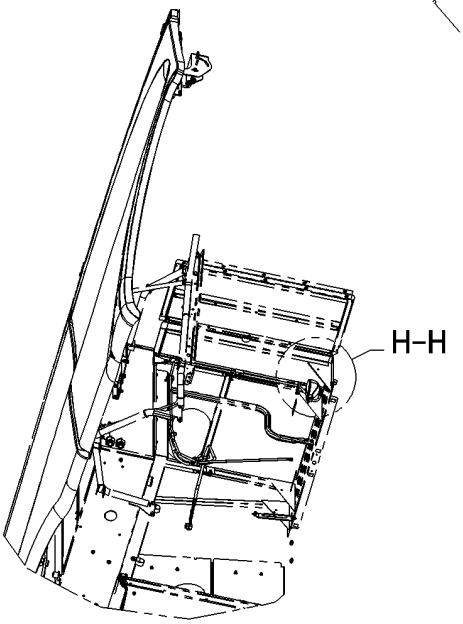

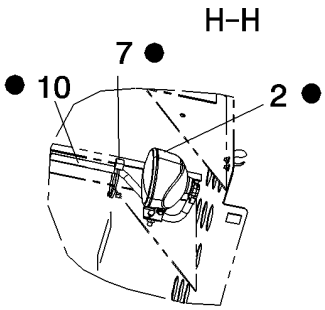

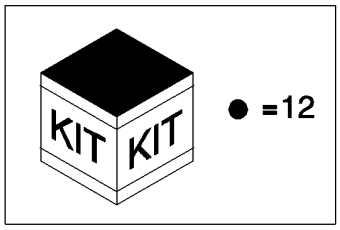

PDF created with pdfFactory trial version www.pdffactory.com

ссылка	Номер детали	Кол-во	Описание
1	87105346	1	BRACKET,
2	87001315	6	LAMP, WORK,
3	183629A1	2	SUPPORT, After Cut Light
4	391062A1	2	SWITCH,
5	87015175	1	DECAL, Light Switch
6	87013946	1	DECAL, Light Switch
7	87694057	14	CLIP,
8	87676251	1	HARNESS, WIRE, Underpanel Lights, Left Hand
9	87676253	1	HARNESS, WIRE, Underpanel Lights, Right Hand
10	87676254	1	HARNESS, WIRE, Engine Light
11	86566989	16	STRAP, CABLE, M4.75 x 190.5 L,
12	87726839	1	DIA KIT, HARVESTER, Underpanel Lighting, Inc. 1-11

PDF created with pdfFactory trial version www.pdffactory.com

04-41A LIGHTING, HID DISTANCE

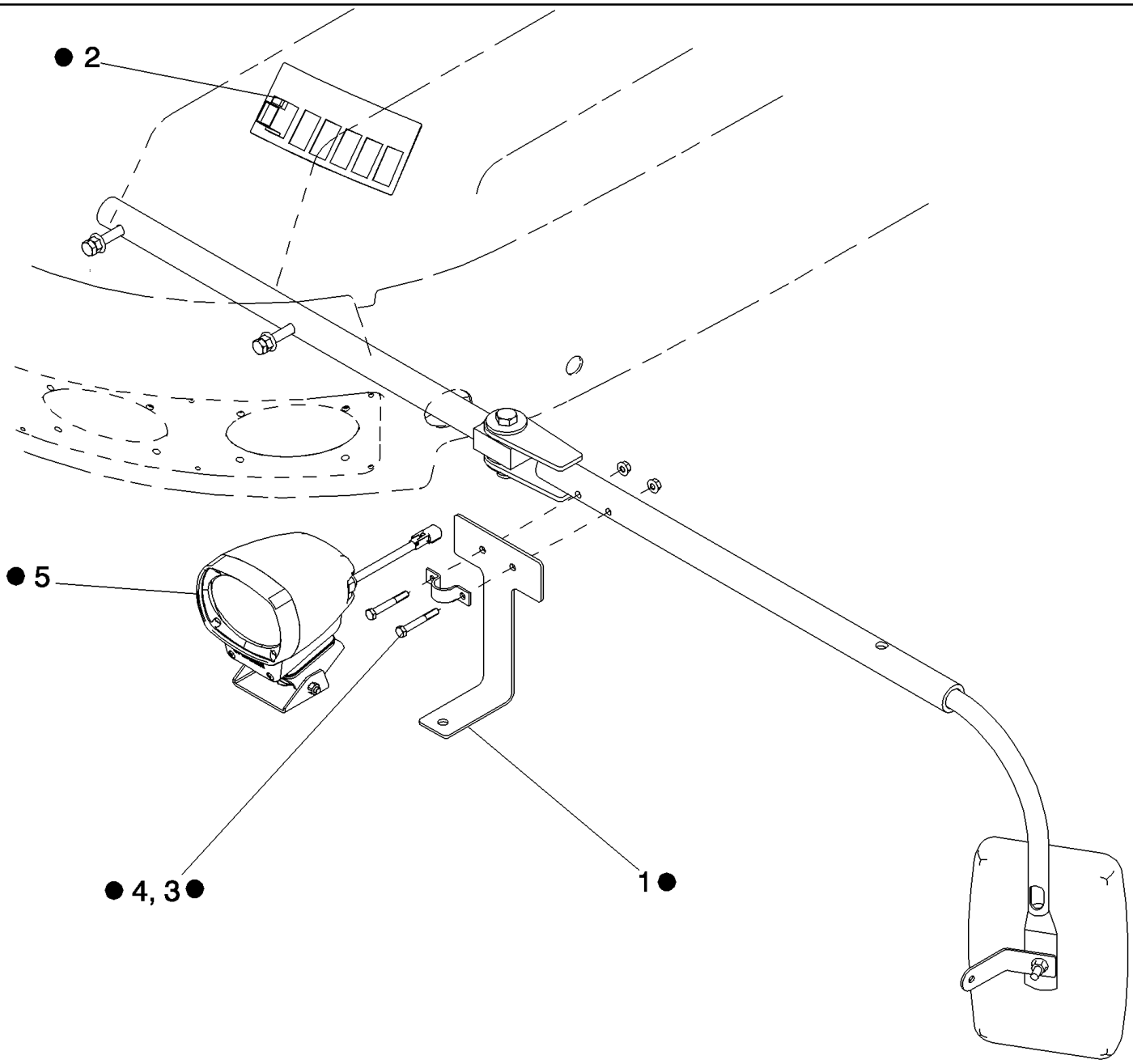

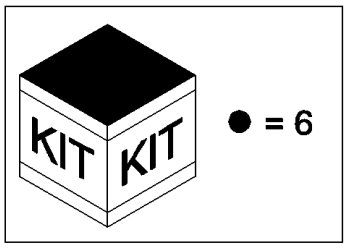

PDF created with pdfFactory trial version www.pdffactory.com

7088 AXIAL-FLOW COMBINE (EU) (4/08-)

04-41A LIGHTING, HID DISTANCE

ссылка	Номер детали	Кол-во	Описание
1	87756382	1	BRACKET, HID Distance Light
2	124095A1	1	SWITCH, LIGHTS, HID Distance
3	814-8060	2	BOLT, Hex, M8 x 60, 8.8,
4	825-5148	2	NUT, M8, Flg Ser,
5	87746238	1	LIGHT ASSY., HID Distance
6	87726717	1	DIA KIT, HARVESTER, HID Distance Light, Inc. 1-5

PDF created with pdfFactory trial version www.pdffactory.com

04-42 LIGHTING, ROAD, LEFT AND RIGHT HAND

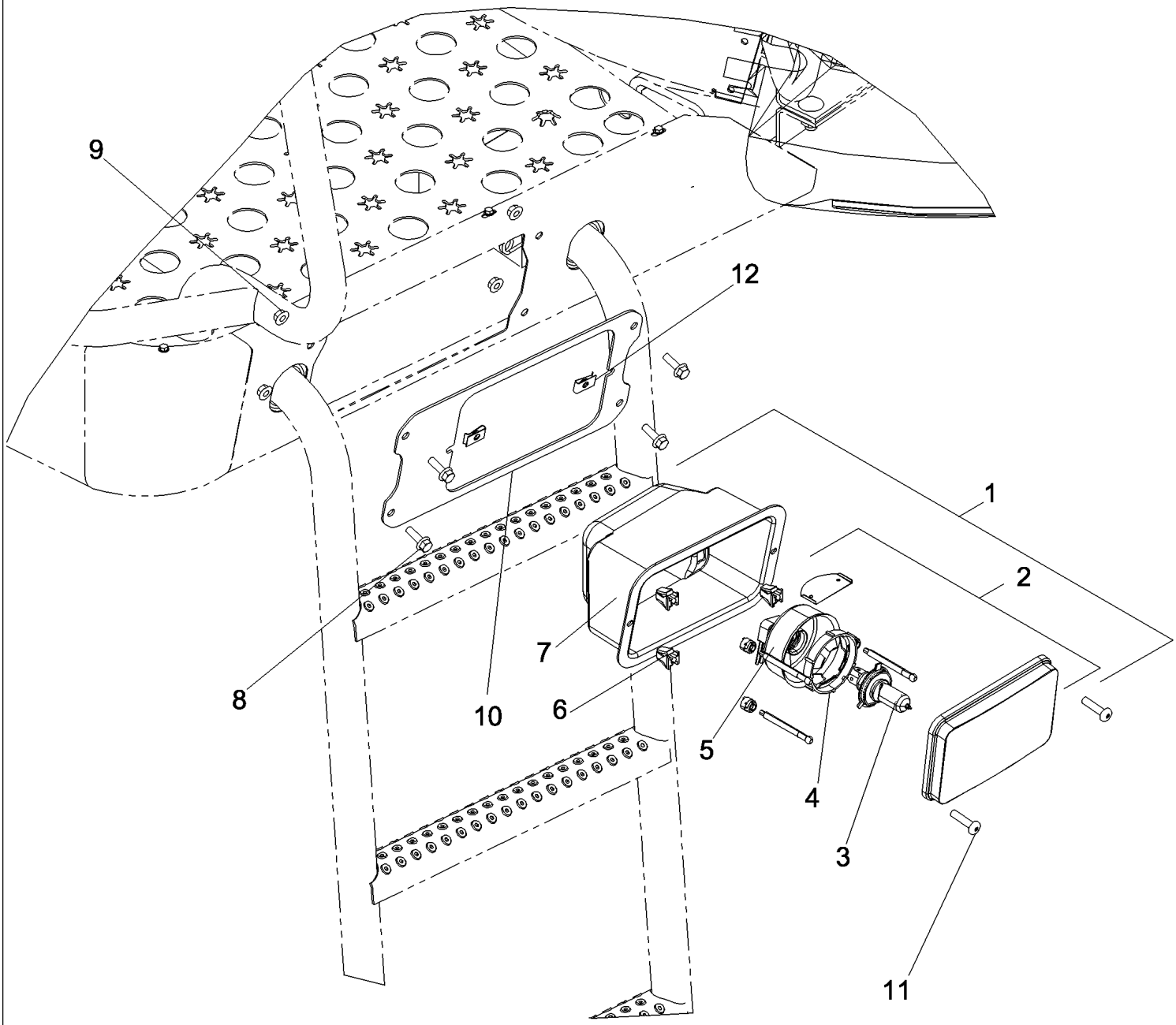

PDF created with pdfFactory trial version www.pdffactory.com

7088 AXIAL-FLOW COMBINE (EU) (4/08-)

04-42 LIGHTING, ROAD, LEFT AND RIGHT HAND

ссылка	Номер детали	Кол-во	Описание
1	301719A1	1	LAMP, Right Hand, E-Right, Inc. 2 - 7
1	301716A1	1	LAMP, Right Hand, E-Left, Inc. 2 - 7, United Kingdom
1	301721A1	1	LAMP, Left Hand, E-Right, Inc. 2 - 7
1	301717A1	1	LAMP, Left Hand, E-Left, Inc. 2 - 7, United Kingdom
2	301727A1	1	LAMP, Housing
2	301728A1	1	LAMP, Housing, United Kingdom
3	87283179	1	BULB, H4
4	301724A1	1	COLLAR CLAMP,
5	301725A1	1	SEAL,
6	301726A1	3	NUT,
7	301722A1	1	HOUSING, Right Hand
7	301723A1	1	HOUSING, Left Hand
8	87675531	8	BOLT,
9	86050300	8	NUT, M6 x 1, Flg, Cl10,
10	84159027	1	PLATE, Headlight Mount, Right Hand
10	84158419	1	PLATE, Headlight Mount, Right Hand
11	1276051C1	4	SCREW, SELF TAPPING, Cross Pan Hd, 1/4" x 1",
12	564791R1	4	NUT,

PDF created with pdfFactory trial version www.pdffactory.com

04-43 REAR LICENSE PLATE LIGHTS AND HARNESS

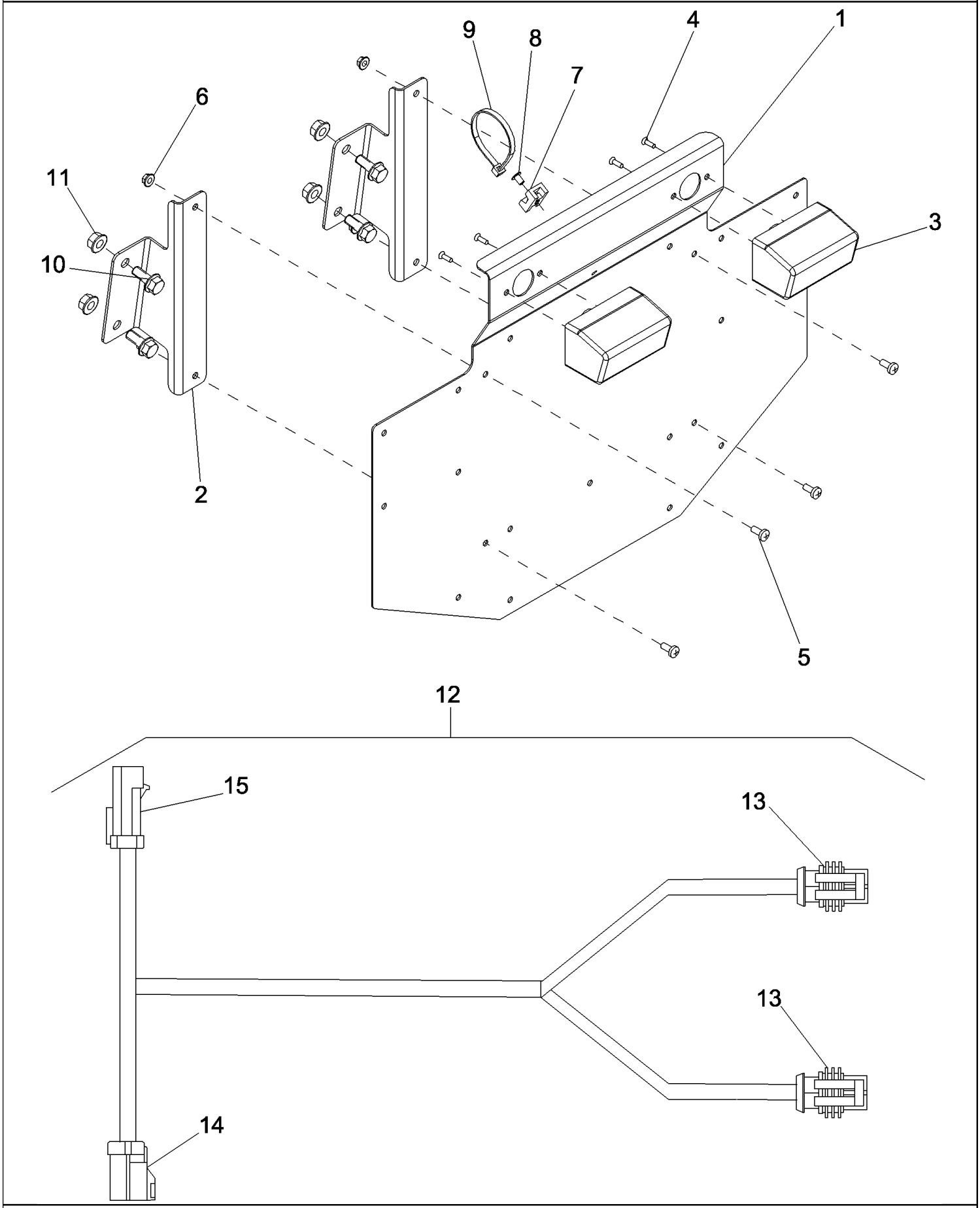

PDF created with pdfFactory trial version www.pdffactory.com

7088 AXIAL-FLOW COMBINE (EU) (4/08-)

04-43 REAR LICENSE PLATE LIGHTS AND HARNESS

ссылка	Номер детали	Кол-во	Описание
1	87001317	1	PLATE, RETAINING, License Plate
2	87701600	2	BRACKET, Rear License Plate
3	84067964	2	LAMP, NUMBER PLATE,
4	9835804	4	SCREW,
5	43982	4	SCREW,
6	86507064	4	NUT,
7	86590413	1	CLAMP,
8	325911	1	RIVET, Pop, M4.8 x 7.4,
9	86566989	1	STRAP, CABLE, M4.75 x 190.5 L,
10	87656137	4	BOLT, Hex Flg, M8 x 20, 10.9, Full Thd,
11	86507066	4	NUT, M8 x 1.25, Flg, Cl 10,
12	87755431	1	HARNESS, Rear License Plate Lights, Inc. 13 - 15
13	NSS	2	NOT SERVICED SEPARATELY, CONNECTOR, License Plate Lights, CLT1, CLT2
14	NSS	1	NOT SERVICED SEPARATELY, CONNECTOR, To Left Hand Rear Safety Lights, C248A
15	NSS	1	NOT SERVICED SEPARATELY, CONNECTOR, To Left Hand Side Harness, C248

PDF created with pdfFactory trial version www.pdffactory.com

7088 AXIAL-FLOW COMBINE (EU) (4/08-)

04-43A KIT, ROAD LIGHTING, FOLDING CORN HEAD

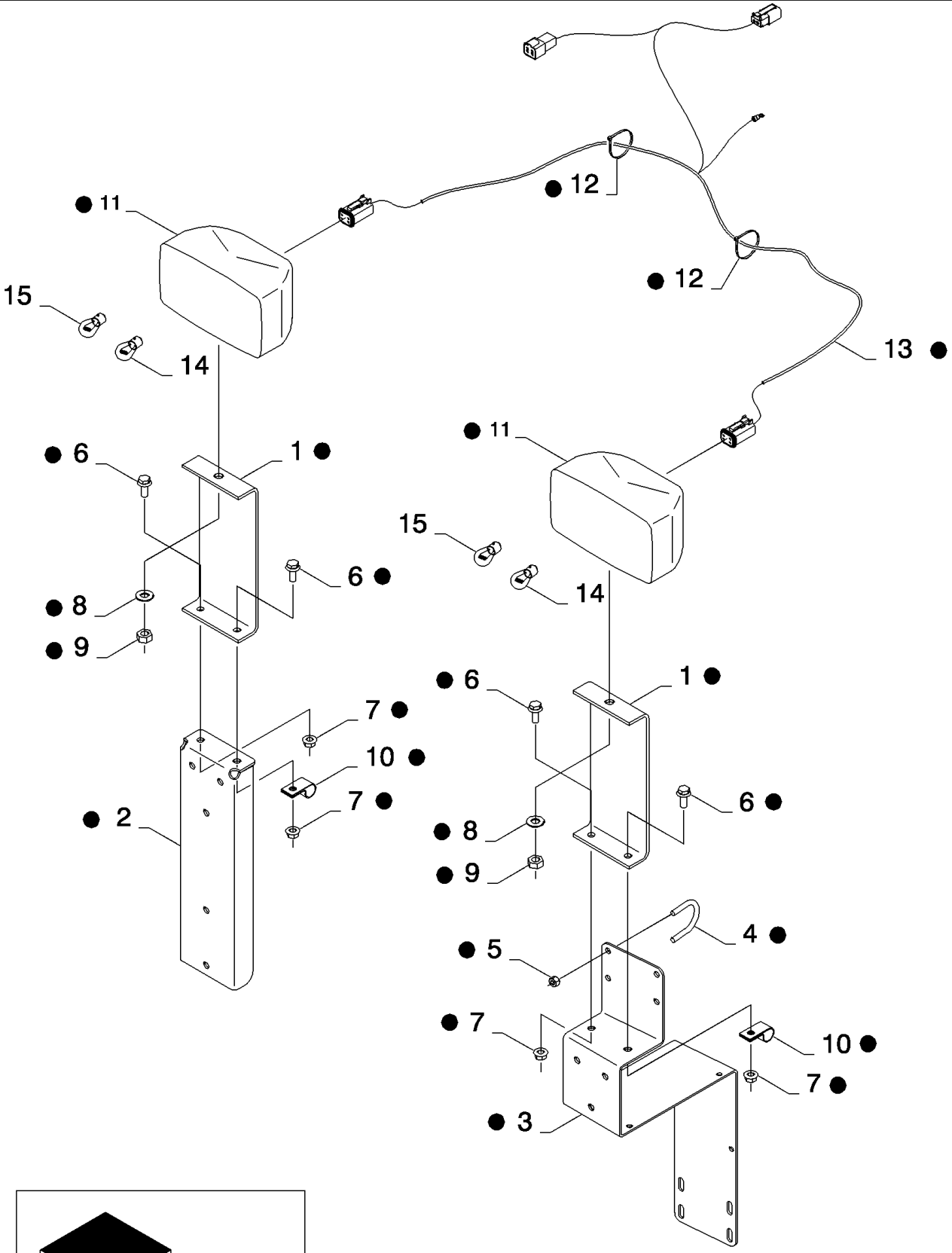

● = 16

PDF created with pdfFactory trial version www.pdffactory.com

7088 AXIAL-FLOW COMBINE (EU) (4/08-)

04-43A KIT, ROAD LIGHTING, FOLDING CORN HEAD

ссылка	Номер детали	Кол-во	Описание
1	87524401	2	PLATE, Light Support
2	87564056	1	BRACKET, Right Hand Signal Plate
3	87567408	1	BRACKET, Upper Left Hand Light
4	188528A1	4	U-BOLT,
5	230-4214	8	NUT, LOCK, 1/4"-20, GA,
6	409-7512	4	BOLT, Hex Flg, 5/16"-18 x 3/4", Serr,
7	231-5145	4	NUT, Flg, USR, 5/16"-18,
8	140045	2	WASHER, SPRING, Belleville, M10,
9	100016	2	NUT, M10, Cl 8,
10	9837692	2	CLAMP,
11	86613046	2	LAMP, Inc. 14, 15
12	86566990	20	STRAP, CABLE, M4.8 x 292 L,
13	84457539	1	HARNESS, Lighting
14	353078	1	BULB,
15	446592	1	BULB, H4, 12V, 60/55W,
16	87584550	1	DIA KIT, HARVESTER, Road Lighting, Folding Corn Head, Inc. 1-13

PDF created with pdfFactory trial version www.pdffactory.com

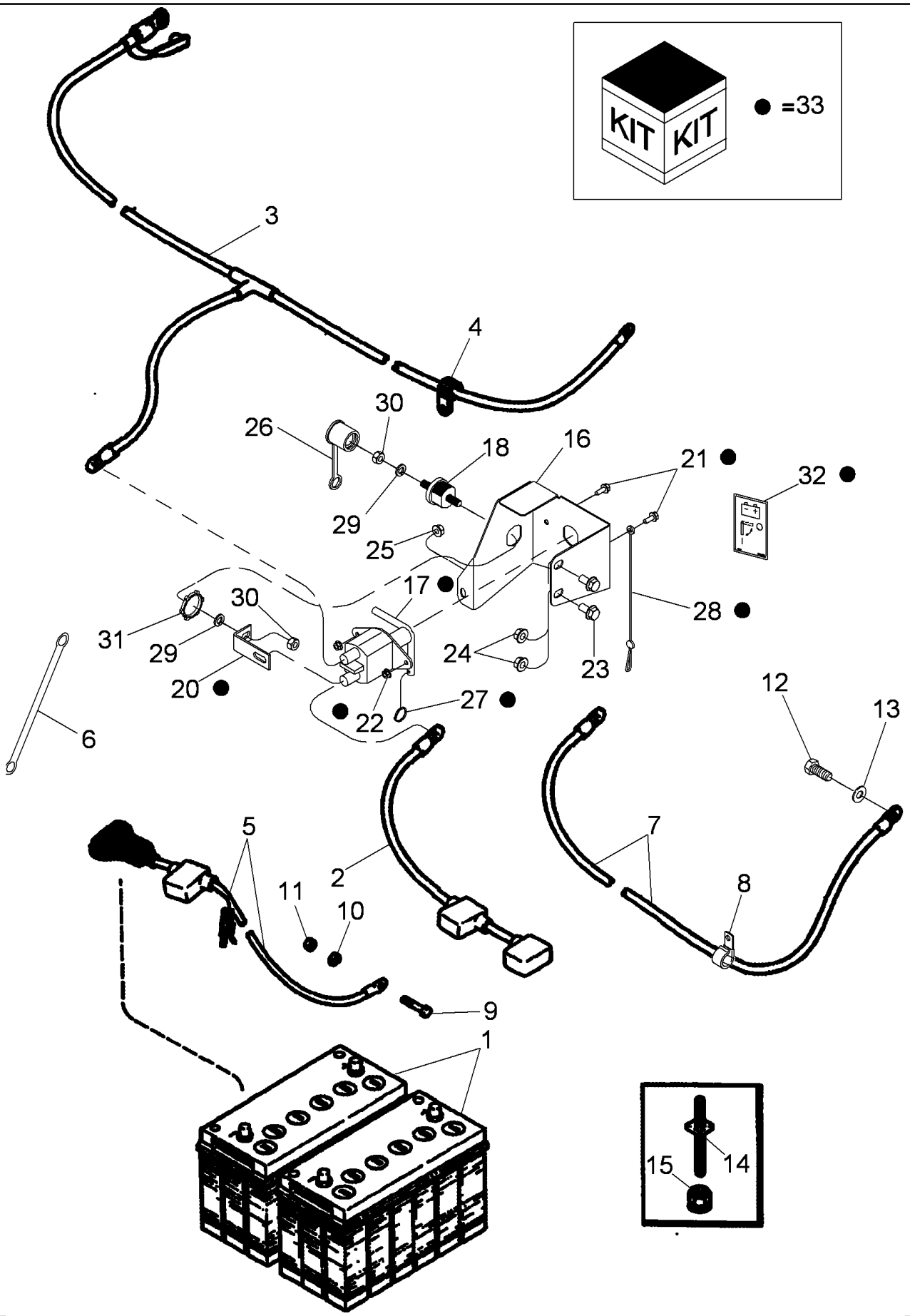

PDF created with pdfFactory trial version www.pdffactory.com

7088 AXIAL-FLOW COMBINE (EU) (4/08-)

04-44 BATTERY AND BATTERY CABLES

ссылка	Номер детали	Кол-во	Описание
1	A187596	2	BATTERY, Dry, 12V
2	87726635	1	CABLE, Battery Positive
3	87726637	1	CABLE, Battery Positive
4	515-23286	2	CLAMP, 1 1/8", Insul, 3/8" Bolt,
5	87398398	1	CABLE, Battery Negative
6	278033A2	1	CABLE, GROUND, Cab To Chassis
7	128742A2	1	CABLE, GROUND, Engine
8	291207C1	1	CLAMP,
9	413-632	1	BOLT, Hex, 3/8"-16 x 2", G5,
10	492-11038	1	WASHER, LOCK, 3/8",
11	425-106	1	NUT, 3/8"-16, G5,
12	120104	4	BOLT, Hex, M8 x 20, 8.8,
13	322358	4	WASHER, SPRING, Belleville, M8,
14	128289A1	2	SCREW,
15	231-5145	2	NUT, Flg, USR, 5/16"-18,
16	87721282	1	BRACKET, Battery Disconnect
17	84004375	1	SWITCH, Battery Disconnect
18	190158A1	1	BLOCK, Junction, Inc. 29 - 31
19	245739C1	1	BUSHING, Jump Start
20	87538385	1	BAR, Jump Start To Disconnect
21	87695418	2	BOLT,
22	87301498	2	NUT,
23	87698835	2	BOLT,
24	86050279	2	NUT, M10 x 1.5, Flg, Cl 10,
25	86507066	1	NUT, M8 x 1.25, Flg, Cl 10,
26	87539000	1	CAP, Battery Stud
27	87026295	1	WASHER, LOCK, M20 x 24.6 x 2.8 Thk,
28	409114A1	1	CABLE,
29	NSS	2	NOT SERVICED SEPARATELY, WASHER
30	NSS	2	NOT SERVICED SEPARATELY, NUT
31	NSS	1	NOT SERVICED SEPARATELY, NUT
32	87745531	1	DECAL, Battery Switch

PDF created with pdfFactory trial version www.pdffactory.com

7088 AXIAL-FLOW COMBINE (EU) (4/08-)

04-45 BATTERY AND TOOL BOX SUPPORT

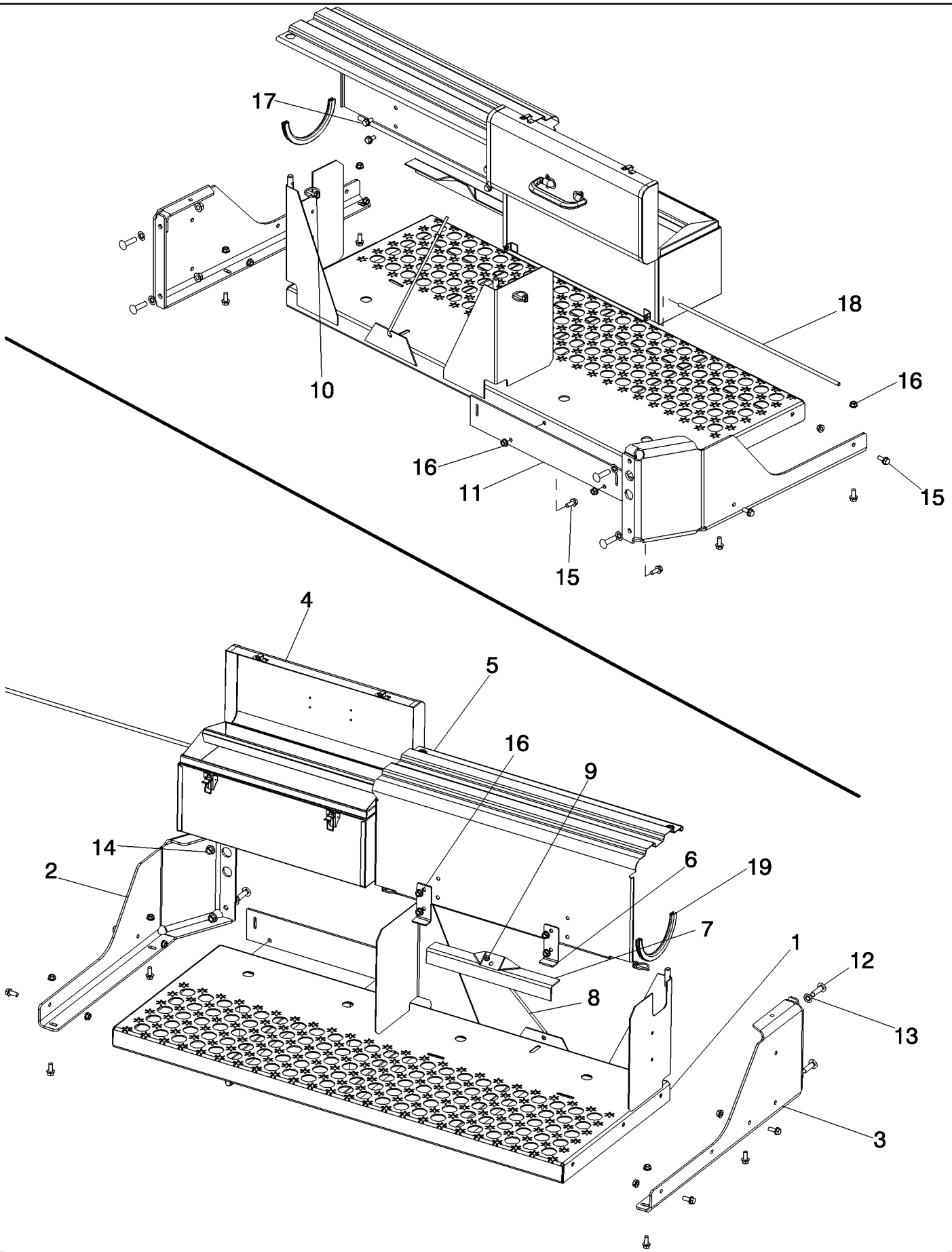

PDF created with pdfFactory trial version www.pdffactory.com

7088 AXIAL-FLOW COMBINE (EU) (4/08-)

04-45 BATTERY AND TOOL BOX SUPPORT

ссылка	Номер детали	Кол-во	Описание
1	87726742	1	BRACKET, Battery Box Platform
2	84161638	1	BRACKET, Battery Platform, Front
3	84161640	1	BRACKET, Battery Platform, Rear
4	87613832	1	TOOL BOX, COMPLETE,
5	87613823	1	COVER ASSY, Battery Box
6	87608663	2	STRAP, SECURING, Battery Box Cover
7	84207413	1	Battery Hold Down
8	A147915	1	BOLT, Battery Hold Down
9	425-104	1	NUT, 1/4"-20, G5,
10	A33497	2	PIN, LINCH,
11	87608675	1	PLATE ASSY., Battery and Tool Box
12	87682394	4	BOLT,
13	131-415	4	NUT, LOCK, Push, Bolt Retainer, 3/8" x 25/32",
14	86050279	4	NUT, M10 x 1.5, Flg, Cl 10,
15	87656137	10	BOLT, Hex Flg, M8 x 20, 10.9, Full Thd,
16	86507066	14	NUT, M8 x 1.25, Flg, Cl 10,
17	87681207	4	BOLT,
18	397115A2	1	TUBE, Tool Box Retainer
19	135370A1	1	STRIP, PROTECTION,

PDF created with pdfFactory trial version www.pdffactory.com

04-46 ALTERNATOR MOUNTING

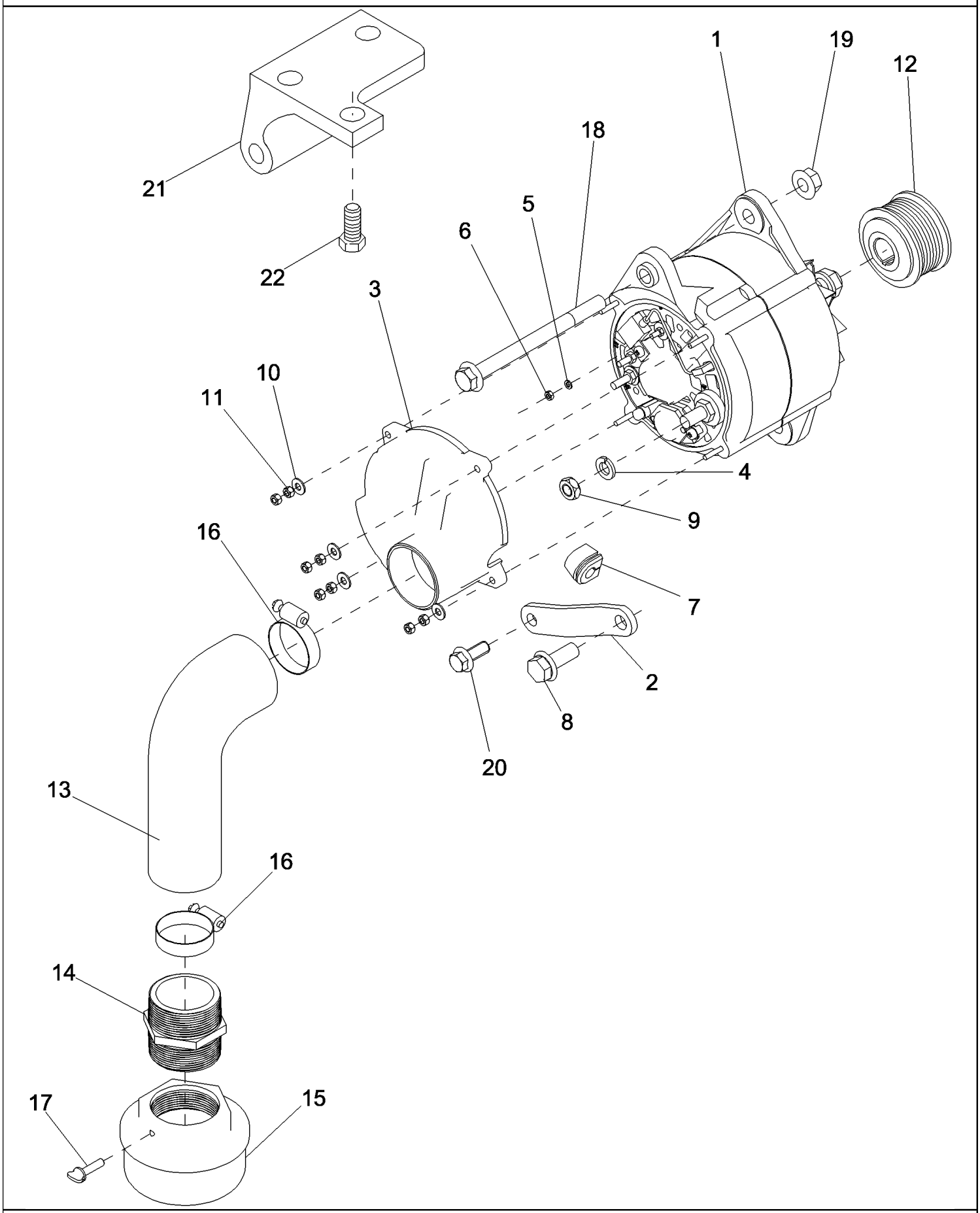

PDF created with pdfFactory trial version www.pdffactory.com

7088 AXIAL-FLOW COMBINE (EU) (4/08-)

04-46 ALTERNATOR MOUNTING

ссылка	Номер детали	Кол-во	Описание
1	125849A1	1	ALTERNATOR, 135 amp
2	NSS	1	NOT SERVICED SEPARATELY, BRACE, Alternator
3	1338890C1	1	COVER, Alternator
4	492-11044	1	WASHER, LOCK, 7/16",
5	892-11004	1	WASHER, LOCK, M4,
6	825-1404	1	NUT, M4, Cl 8,
7	1964826C1	1	GROMMET, Alternator
8	409-7820	1	BOLT, Hex Flg, 1/2"-13 x 1 1/4", Serr,
9	425-147	1	NUT, Jam, 7/16"-14, G5,
10	495-31025	4	WASHER, 3/16",
11	825-1405	8	NUT, M5, Cl 8,
12	87452704	1	PULLEY, Alternator
13	143953A1	1	ELBOW, Alternator Air Inlet
14	87552611	1	PIPE,
15	87540645	1	SCREEN, Alternator Air
16	214-1536	2	CLAMP, HOSE, #36, 1.81/2.75 Type F Worm, W/liner,
17	183-112	1	THUMB SCREW, 1/4"-20 x 1",
18	87030021	1	BOLT, Hex Flg, M12 x 150, 10.9,
19	86512497	1	NUT, M12 x 1.75, Flg, Cl 10,
20	86705429	1	BOLT,
21	87360715	1	SUPPORT, Alternator
22	844-10030	3	BOLT, Hex Flg, M10 x 30, 8.8, Full Thd,

PDF created with pdfFactory trial version www.pdffactory.com

04-47 STARTER ASSEMBLY - MOUNTING

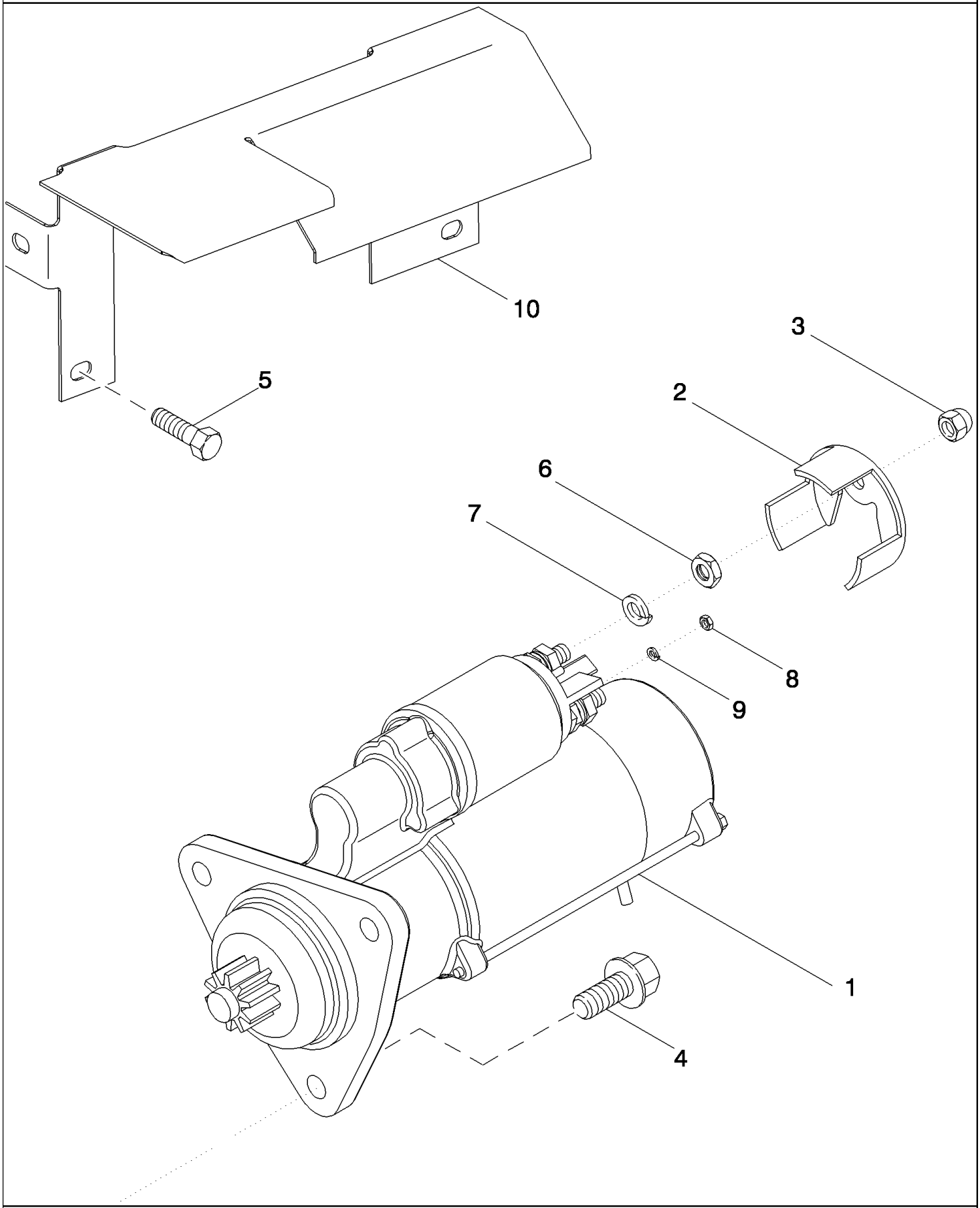

PDF created with pdfFactory trial version www.pdffactory.com

7088 AXIAL-FLOW COMBINE (EU) (4/08-)

04-47 STARTER ASSEMBLY - MOUNTING

ссылка	Номер детали	Кол-во	Описание
1	84146320	1	MOTOR, STARTER,
2	87422566	1	COVER, Jump Start Protection
3	87422567	1	NUT,
4	87695414	3	BOLT,
5	87656137	3	BOLT, Hex Flg, M8 x 20, 10.9, Full Thd,
6	829-4410	1	NUT, Thin, M10 x 1.5, Cl 05,
7	892-11010	1	WASHER, LOCK, M10,
8	825-1405	1	NUT, M5, Cl 8,
9	892-11005	1	WASHER, LOCK, M5,
10	87345873	1	SHIELD, Starter

PDF created with pdfFactory trial version www.pdffactory.com

04-48 STARTER ASSEMBLY - ISKRA

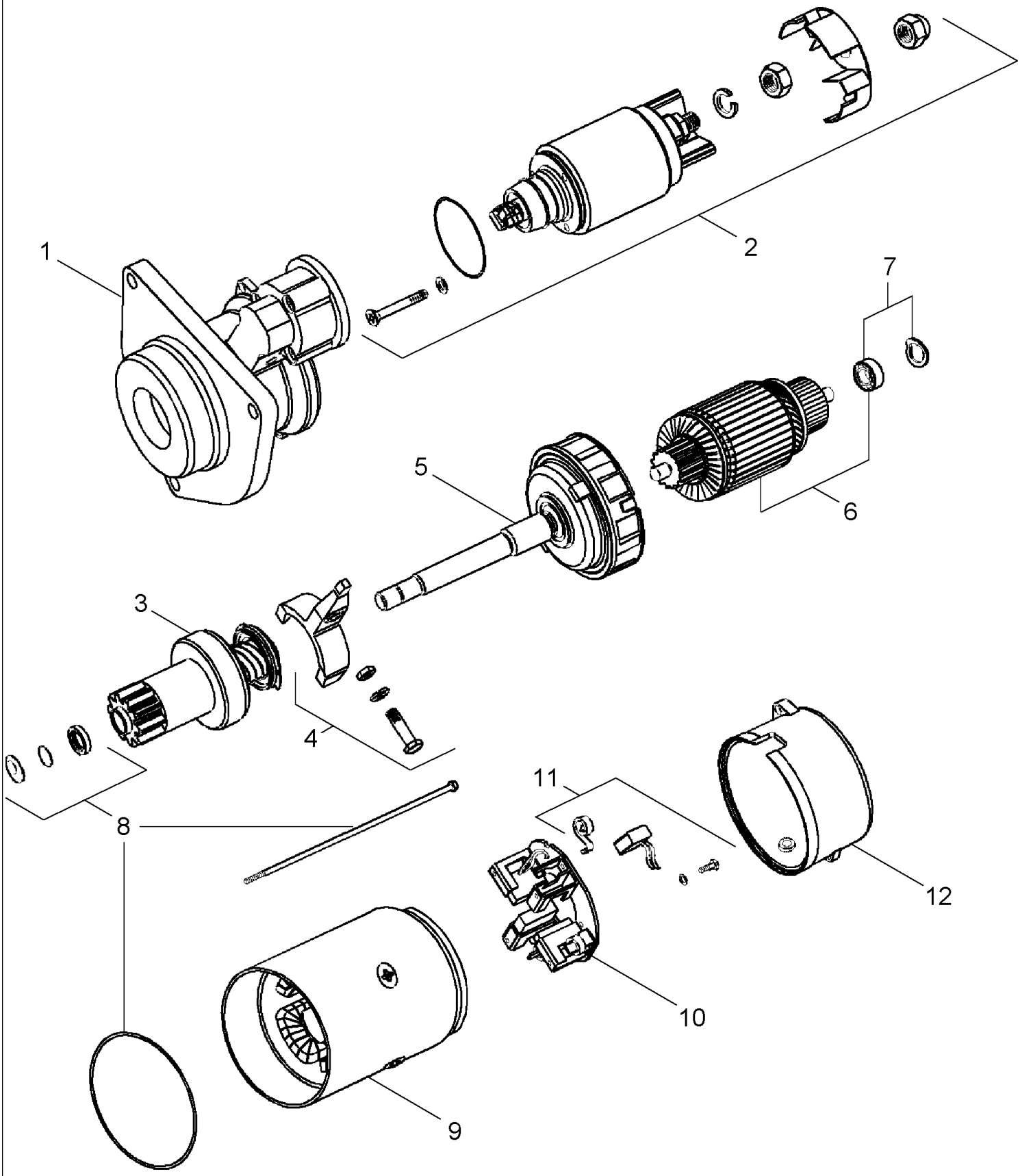

PDF created with pdfFactory trial version www.pdffactory.com

7088 AXIAL-FLOW COMBINE (EU) (4/08-)

04-48 STARTER ASSEMBLY - ISKRA

ссылка	Номер детали	Кол-во	Описание
	84146320	1	MOTOR, STARTER, Iskra, Inc. 1 - 12
1	87452304	1	BRACKET, Drive End
2	87452305	1	SOLENOID,
3	87452306	1	DRIVE ASSY.,
4	87452307	1	LEVER, Engaging
5	87452308	1	GEAR, Reduction
6	87452309	1	ARMATURE,
7	87452310	1	KIT,
8	87452311	1	KIT, STARTER MTR REPAIR, SET Fixing Parts
9	87452312	1	STATOR,
10	87452313	1	BRUSH HOLDER,
11	87452314	1	BRUSH, SET Spring
12	87452315	1	BRACKET, Commutator End

PDF created with pdfFactory trial version www.pdffactory.com

04-49 STARTER RELAY

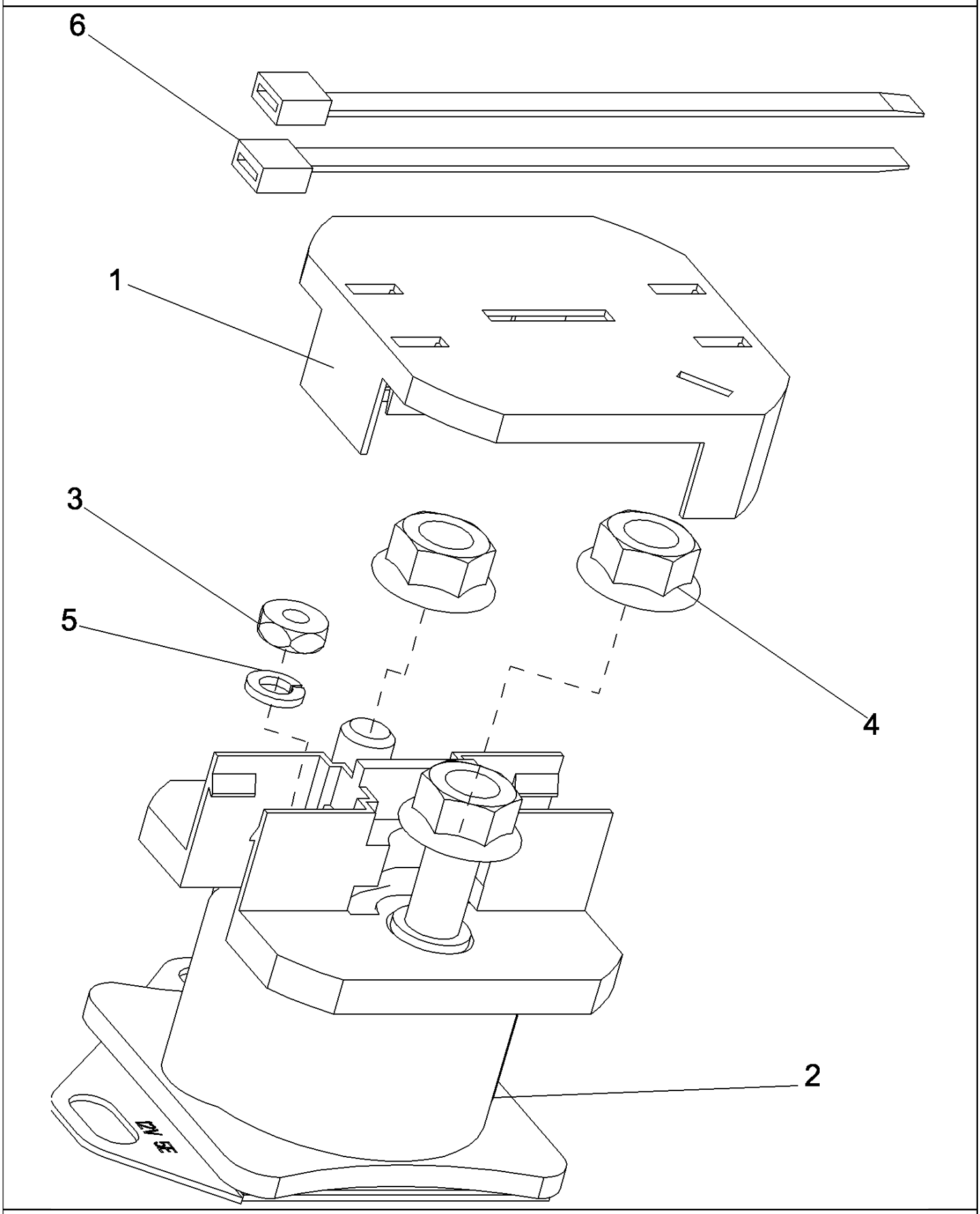

PDF created with pdfFactory trial version www.pdffactory.com

7088 AXIAL-FLOW COMBINE (EU) (4/08-)

04-49 STARTER RELAY

ссылка	Номер детали	Кол-во	Описание
1	178148A1	1	COVER, Solenoid Starting Switch
2	183038A1	1	SWITCH, SOLENOID, With Barrier
3	225-14210	1	NUT, #10-32,
4	231-5145	3	NUT, Flg, USR, 5/16"-18,
5	492-11010	1	WASHER, LOCK, #10,
6	L18337	2	STRAP, CABLE, 9.95"-12.1" lg,

PDF created with pdfFactory trial version www.pdffactory.com

04-50 ALTERNATOR ASSEMBLY

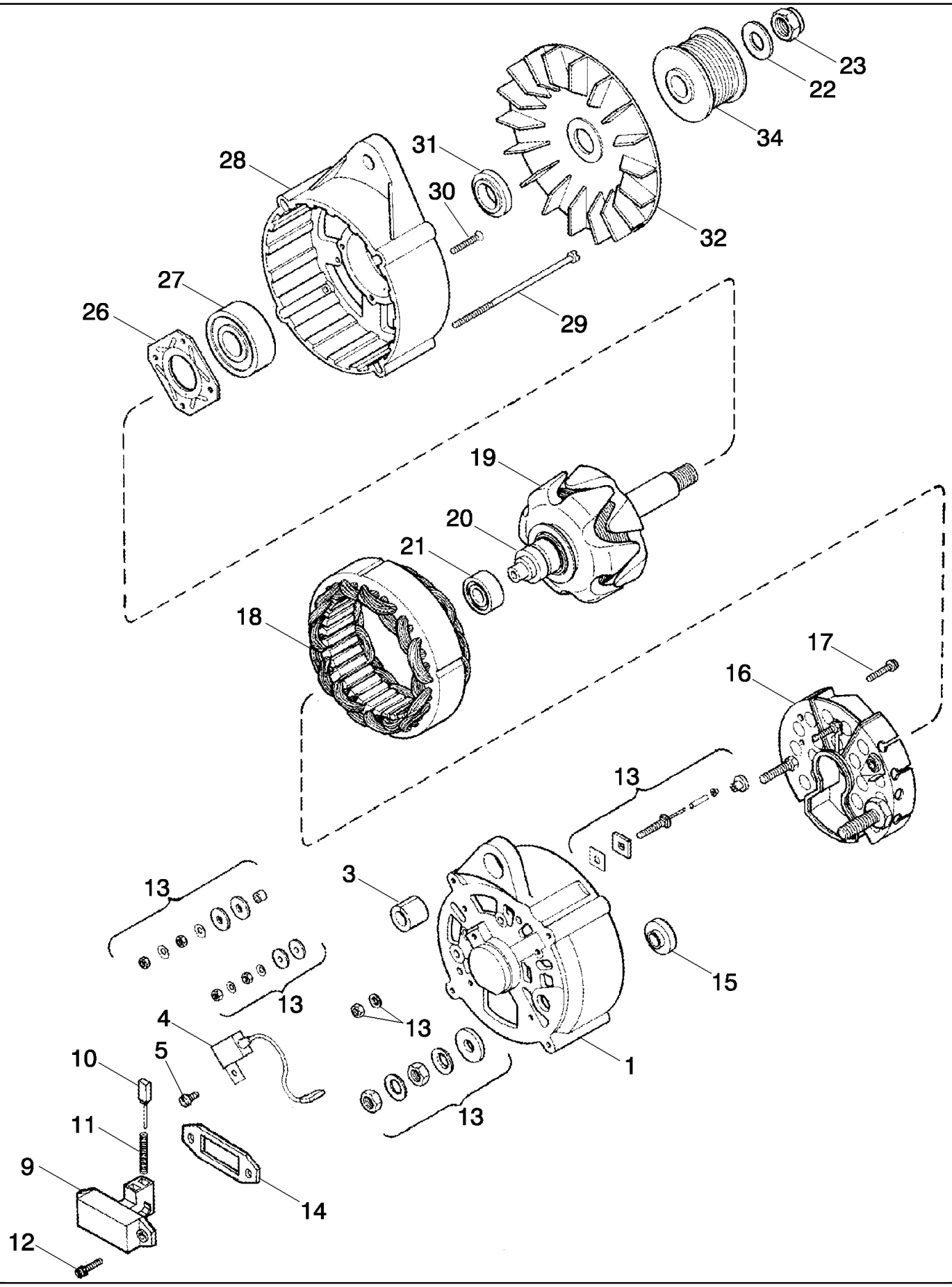

PDF created with pdfFactory trial version www.pdffactory.com

7088 AXIAL-FLOW COMBINE (EU) (4/08-)

04-50 ALTERNATOR ASSEMBLY

ссылка	Номер детали	Кол-во	Описание
	125849A1R	1	REMAN-ALTERNATOR, N.A. Only
	125849A1C	1	CORE-ALTERNATOR,
	125849A1	1	ALTERNATOR, 135 amp, Inc. 1 - 32
1	1964731C1	1	HOUSING,
3	1964737C1	1	BUSHING,
4	3079389R1	1	CAPACITOR,
5	840-1510	1	SCREW, Cross Pan Hd, M5 x 10,
9	111899A1	1	REGULATOR,
10	1964968C1	1	BRUSH, Set
11	P1538138P	2	SPRING, COMPRESSION,
12	1530431C1	2	BOLT,
13	1964738C1	1	KIT, REPAIR,
14	140546A1	1	GASKET,
15	140545A1	1	RING,
16	1964732C1	1	RECTIFIER,
17	A186194	2	SCREW, Sltd Truss Hd, M4 x 18, w/LW,
18	140548A1	1	STATOR,
19	1964728C1	1	ROTOR,
20	140543A1	1	RING,
21	1964730C1	1	BEARING, BALL,
22	495-21063	1	WASHER, 9/16",
23	86637650	1	NUT, LOCK, 5/8"-18, GB,
26	1964727C1	1	PLATE,
27	1964726C1	1	BEARING, BALL,
28	1964725C1	1	HOUSING,
29	140549A1	4	SCREW,
30	140541A1	4	SCREW,
31	1964729C1	1	SPACER,
32	1964736C1	1	FAN,
34	87452703	1	PULLEY, Not Included In Assy.

PDF created with pdfFactory trial version www.pdffactory.com

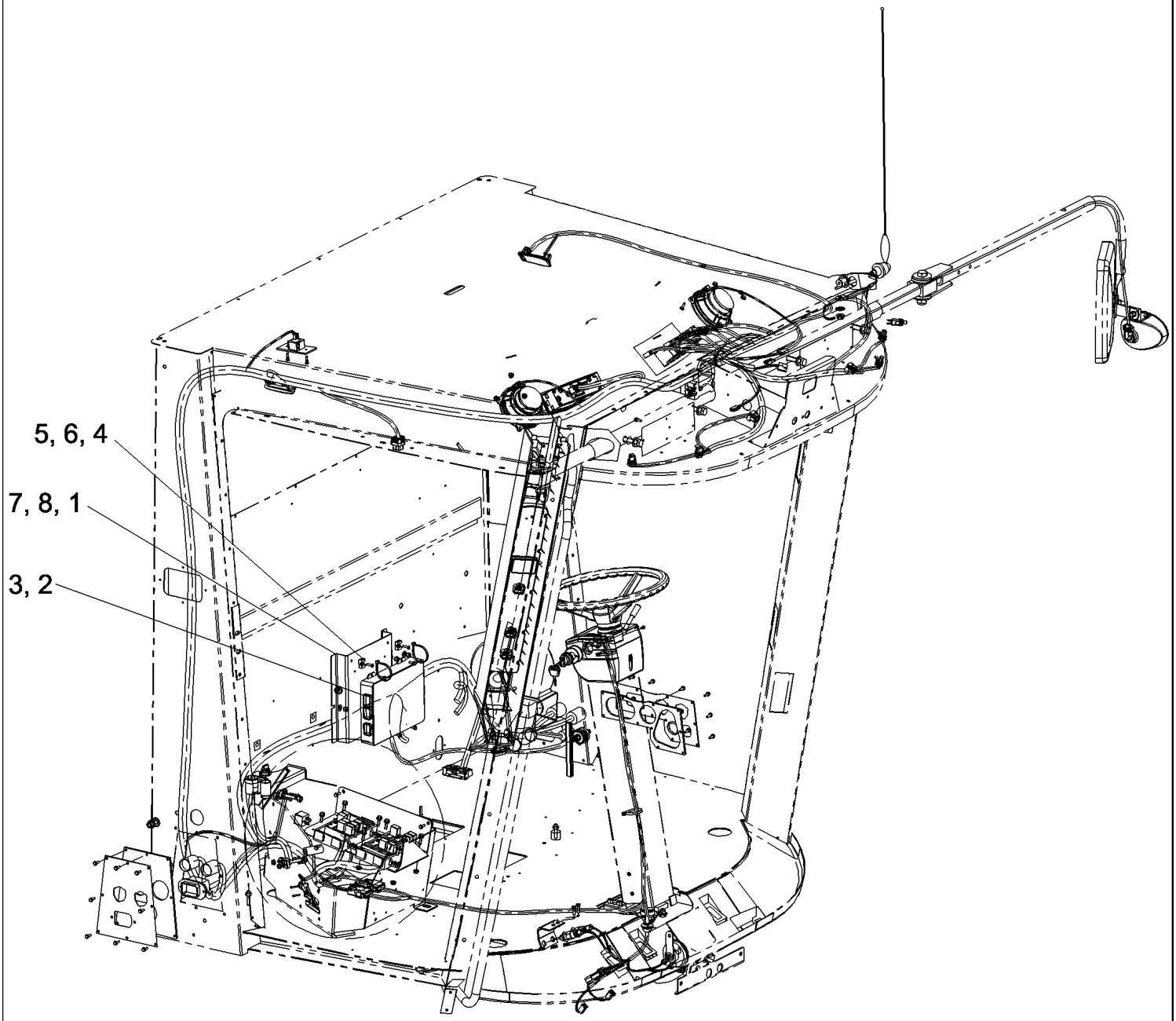

PDF created with pdfFactory trial version www.pdffactory.com

7088 AXIAL-FLOW COMBINE (EU) (4/08-)

04-51 MODULE COMBINE CONTROLLER CXCM

ссылка	Номер детали	Кол-во	Описание
1	87613142	1	BRACKET, CXCM Module Mounting
2	87345131	1	CONTROL, Module CXCM
3	191216A1	4	SCREW, SELF TAPPING, Hex Wash Hd, #10-24 x 5/8",
4	86590413	2	CLAMP,
5	86566989	2	STRAP, CABLE, M4.75 x 190.5 L,
6	445395	2	RIVET, Pop, M4.8 x 18.1,
7	832-10406	3	NUT, LOCK, M6 x 1, Cl 8,
8	495-11028	3	WASHER, 1/4", SAE,

PDF created with pdfFactory trial version www.pdffactory.com

7088 AXIAL-FLOW COMBINE (EU) (4/08-)

04-52 MOTOR ASSY - WIPER, WINDSHIELD

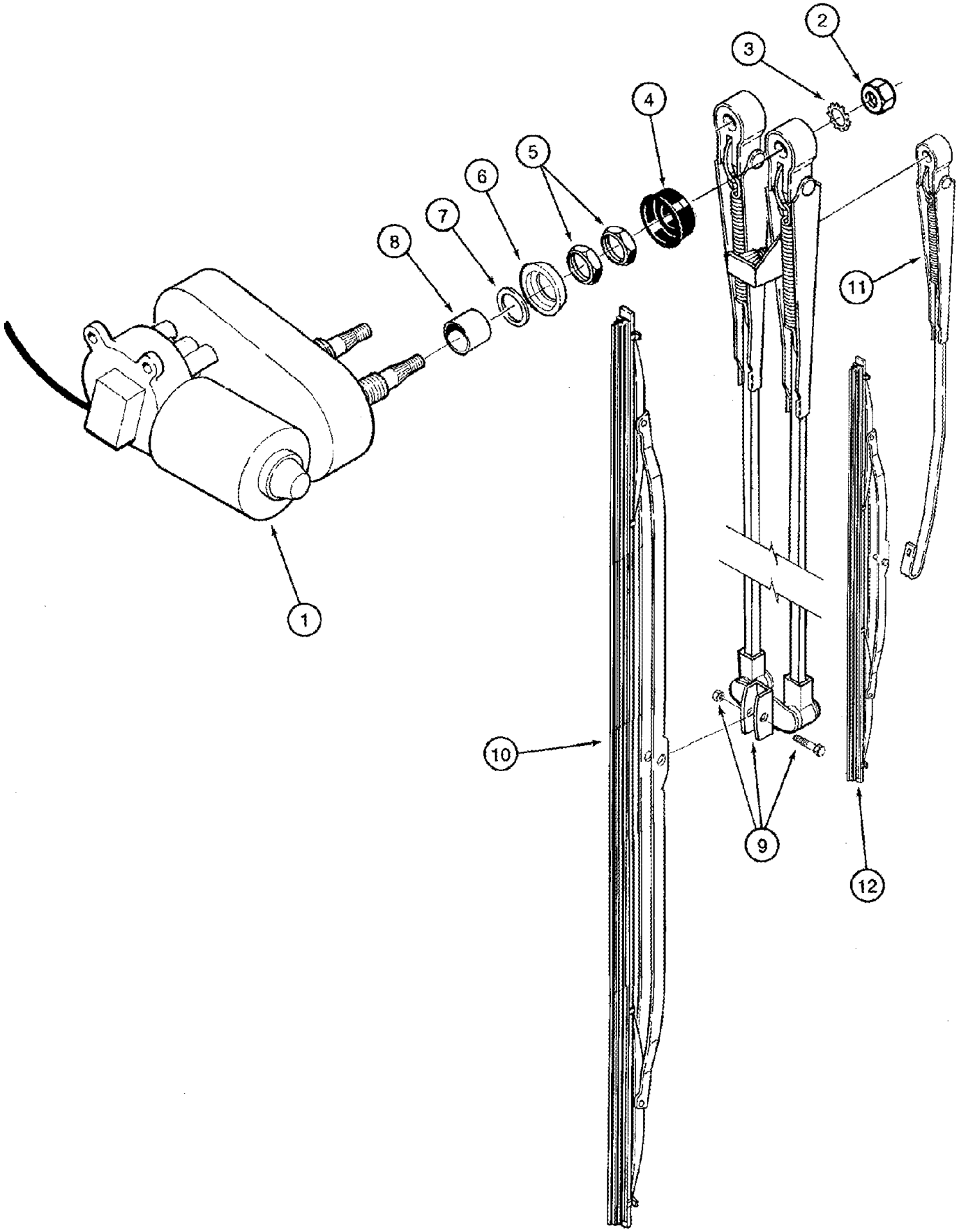

PDF created with pdfFactory trial version www.pdffactory.com

7088 AXIAL-FLOW COMBINE (EU) (4/08-)

04-52 MOTOR ASSY - WIPER, WINDSHIELD

ссылка	Номер детали	Кол-во	Описание
	86976257	1	WIPER MOTOR, Windshield, Double Blade, Inc. 1 - 7
1	NSS	1	NOT SERVICED SEPARATELY, MOTOR
	138013A1	1	KIT, REPAIR, Inc. 2 - 7
2	829-1408	2	NUT, M8, Cl 10,
3	893-11008	2	WASHER, LOCK, Ext Tooth, M8,
4	NSS	2	NOT SERVICED SEPARATELY, COVER
5	NSS	4	NOT SERVICED SEPARATELY, NUT
6	NSS	2	NOT SERVICED SEPARATELY, RETAINER
7	NSS	2	NOT SERVICED SEPARATELY, SEAL
8	86975131	2	SPACER,
	84084748	1	WIPER ARM, Inc. 9 - 12
9	86975127	1	ARM, 1000 mm
10	86975128	1	BLADE, 1000 mm
11	86975133	1	WIPER ARM, 176 mm lg
12	86975129	1	BLADE, 330 mm lg

PDF created with pdfFactory trial version www.pdffactory.com

04-53 WINDSHIELD WASHER

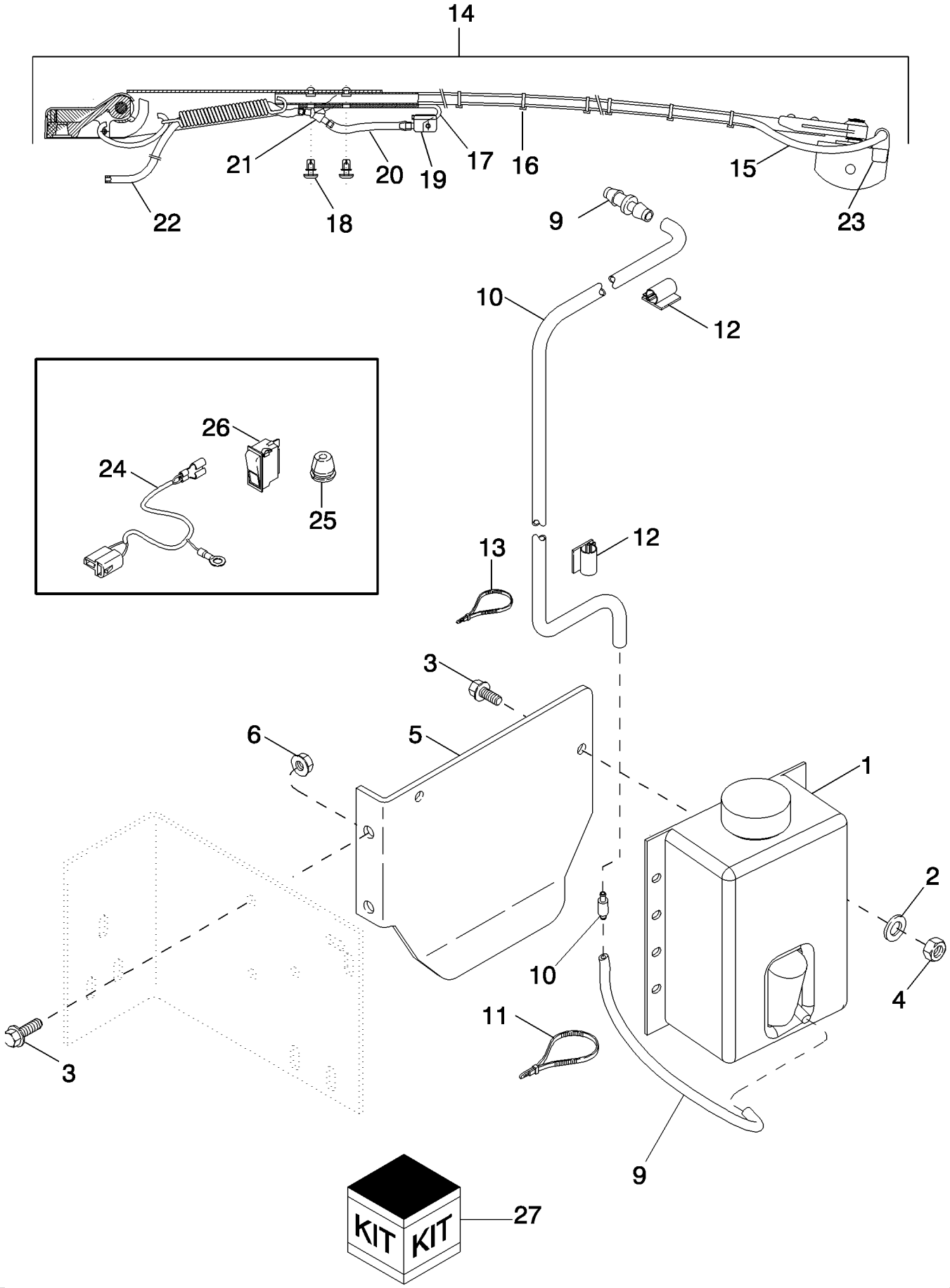

PDF created with pdfFactory trial version www.pdffactory.com

7088 AXIAL-FLOW COMBINE (EU) (4/08-)

04-53 WINDSHIELD WASHER

ссылка	Номер детали	Кол-во	Описание
1	87014923	1	RESERVOIR, WINDSH. WASH,
2	495-11034	2	WASHER, 5/16", SAE,
3	409-7516	4	BOLT, Hex Flg, 5/16"-18 x 1", Serr,
4	231-1445	2	NUT, LOCK, 5/16"-18, GB,
5	87447938	1	SUPPORT, Reservoir
6	231-5145	2	NUT, Flg, USR, 5/16"-18,
7	31-2422	1	HOSE, 254 mm (10"), Cut From 4-1056
8	84037530	1	VALVE, CHECK,
9	31-2364	1	FITTING, 3/16 x 7/64
10	31-2582	1	HOSE, 3962 mm (156"), Cut From 4-1056
11	702093C1	3	STRAP, CABLE, Tie
12	245854A1	4	CLIP,
13	58556C1	2	STRAP, CABLE, Tie, 14"
14	87281666	1	WASHER, WINDSHIELD, Inc. 15 - 23
15	87282393	1	HOSE, 870 mm
16	PL	8	PROCURE LOCALLY, Bundling Tie
17	87282394	1	ARM,
18	87282395	2	RIVET, Snap
19	87282396	1	NOZZLE CAP, Single
20	87282397	1	HOSE, 70 mm
21	87282398	1	FITTING, " Y "
22	PL	1	PROCURE LOCALLY, Hose, 450 mm
23	87282392	1	HOLDER, Nozzle, Double
24	87447600	1	HARNESS, WIRE, Windshield Washer, Used With Field Installed Kit
25	195803C1	1	GROMMET, , Used With Field Installed Kit
26	87447601	1	SWITCH, WINDSHIELD WIPER, W/Washer
27	87447598	1	KIT, DIA, Windshield Washer

PDF created with pdfFactory trial version www.pdffactory.com

04-54 MARKER LIGHT, ITALIAN

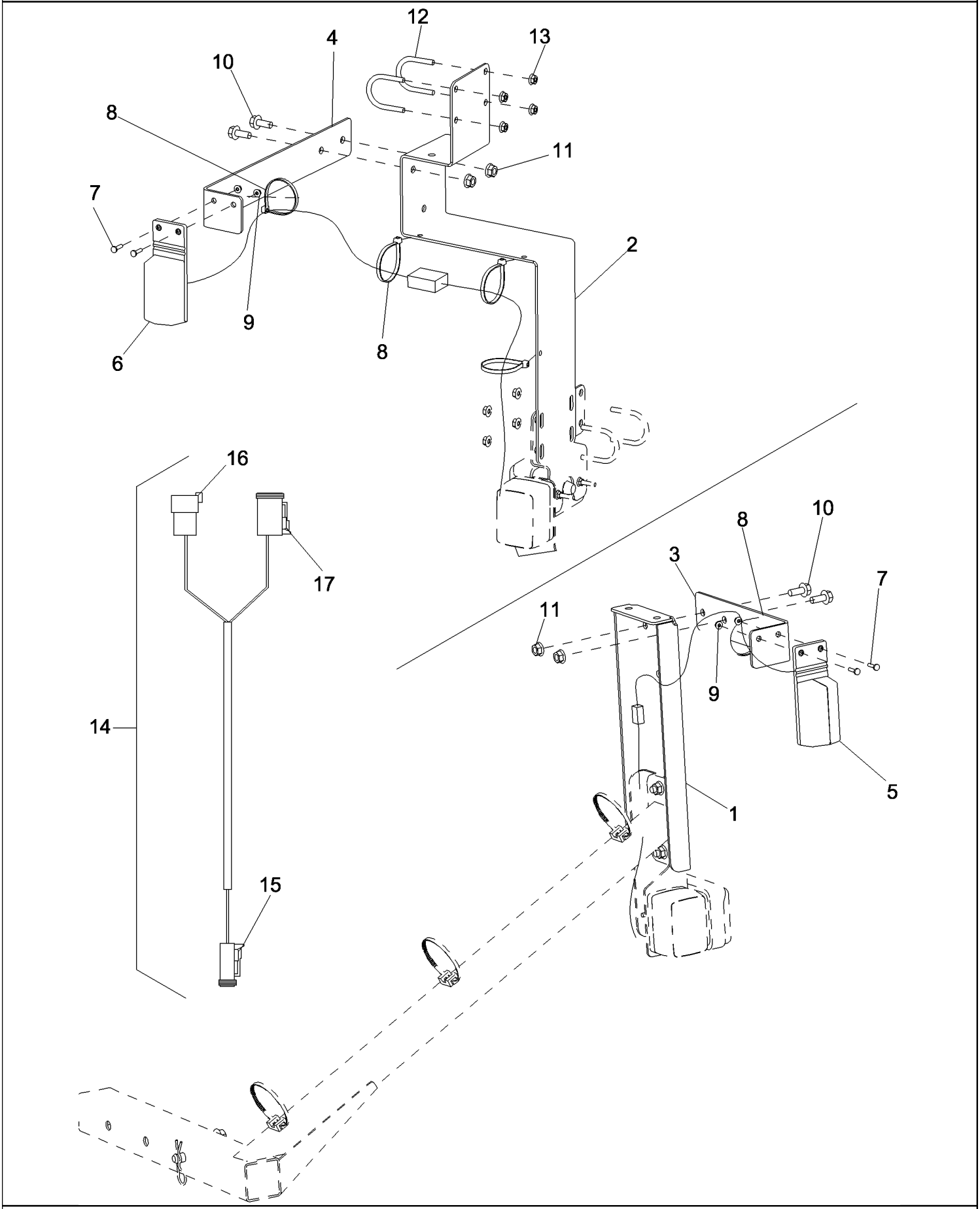

PDF created with pdfFactory trial version www.pdffactory.com

7088 AXIAL-FLOW COMBINE (EU) (4/08-)

04-54 MARKER LIGHT, ITALIAN

ссылка	Номер детали	Кол-во	Описание
1	87564056	1	BRACKET, Right Hand Signal Plate
2	87567408	1	BRACKET, Upper Left Hand Light
3	NSS	1	NOT SERVICED SEPARATELY, PLATE, Right Hand Marker Lamp
4	NSS	1	NOT SERVICED SEPARATELY, PLATE, Left Hand Marker Lamp
5	84437311	1	LAMP, Marker
6	84437310	1	LAMP, Marker
7	86511042	4	SCREW, Cross Pan Hd, M4 x 16,
8	86566989	5	STRAP, CABLE, M4.75 x 190.5 L,
9	87301238	4	NUT,
10	87656137	4	BOLT, Hex Flg, M8 x 20, 10.9, Full Thd,
11	86507066	4	NUT, M8 x 1.25, Flg, Cl 10,
12	87703800	2	U-BOLT,
13	87301498	4	NUT,
14	84148176	2	HARNESS, WIRE, Side Marker, Inc. 15 - 17
15	87695900	1	CONNECTION, ELECTRIC,
16	87695914	1	CONNECTION, ELECTRIC,
17	87694153	1	CONNECTOR, ELEC,

PDF created with pdfFactory trial version www.pdffactory.com

04-55 AFS PRO 600 TOUCHSCREEN DISPLAY MOUNTING

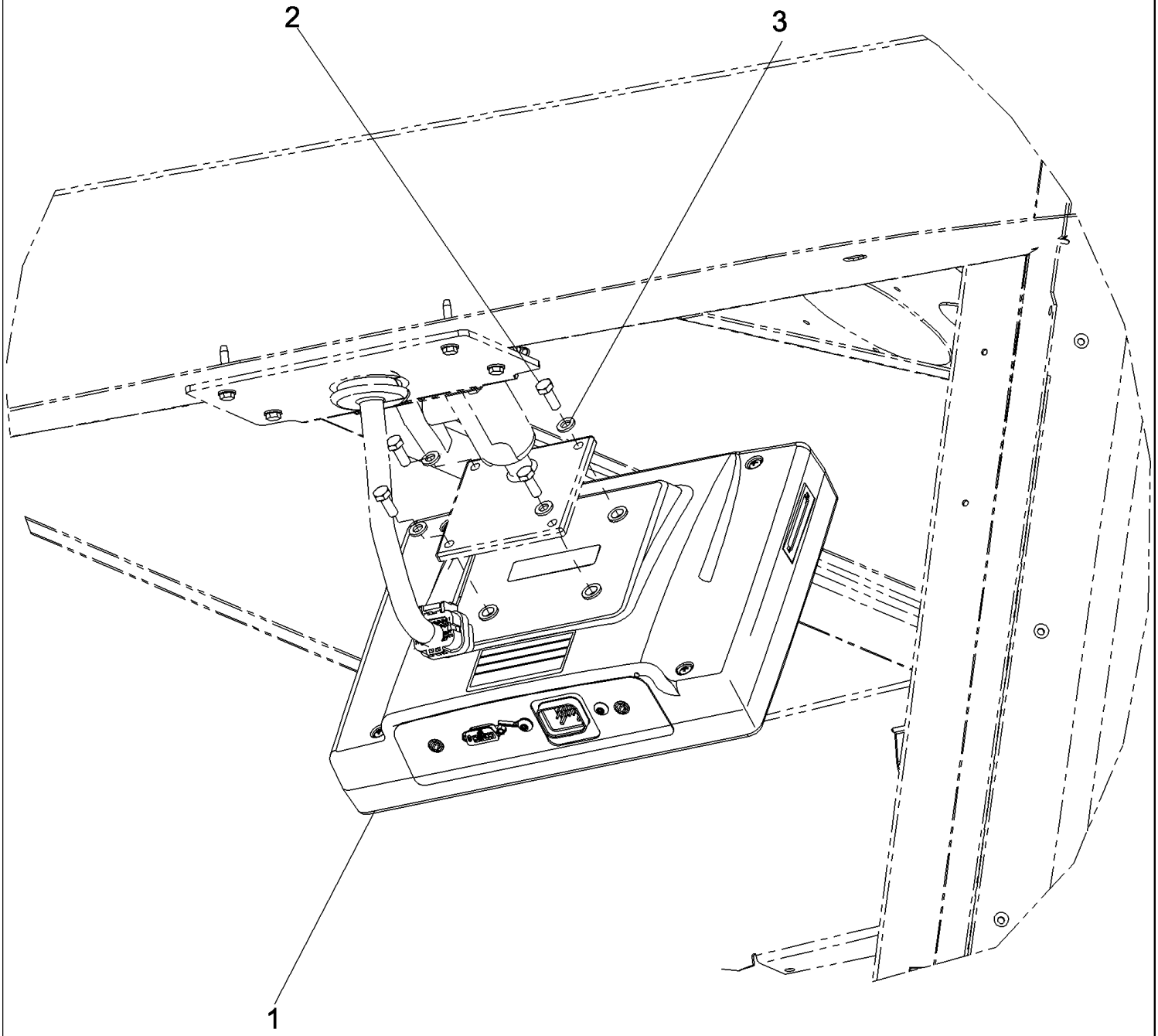

PDF created with pdfFactory trial version www.pdffactory.com

7088 AXIAL-FLOW COMBINE (EU) (4/08-)

04-55 AFS PRO 600 TOUCHSCREEN DISPLAY MOUNTING

ссылка	Номер детали	Кол-во	Описание
1	NSS	1	NOT SERVICED SEPARATELY, DISPLAY, Touchscreen, Black
2	86588450	4	WASHER, M6 x 12 x 1.6 Thk,
3	86508568	4	SCREW, Hex, M6 x 16, 8.8,

PDF created with pdfFactory trial version www.pdffactory.com

04-55A AFS PRO 600 TOUCHSCREEN DISPLAY

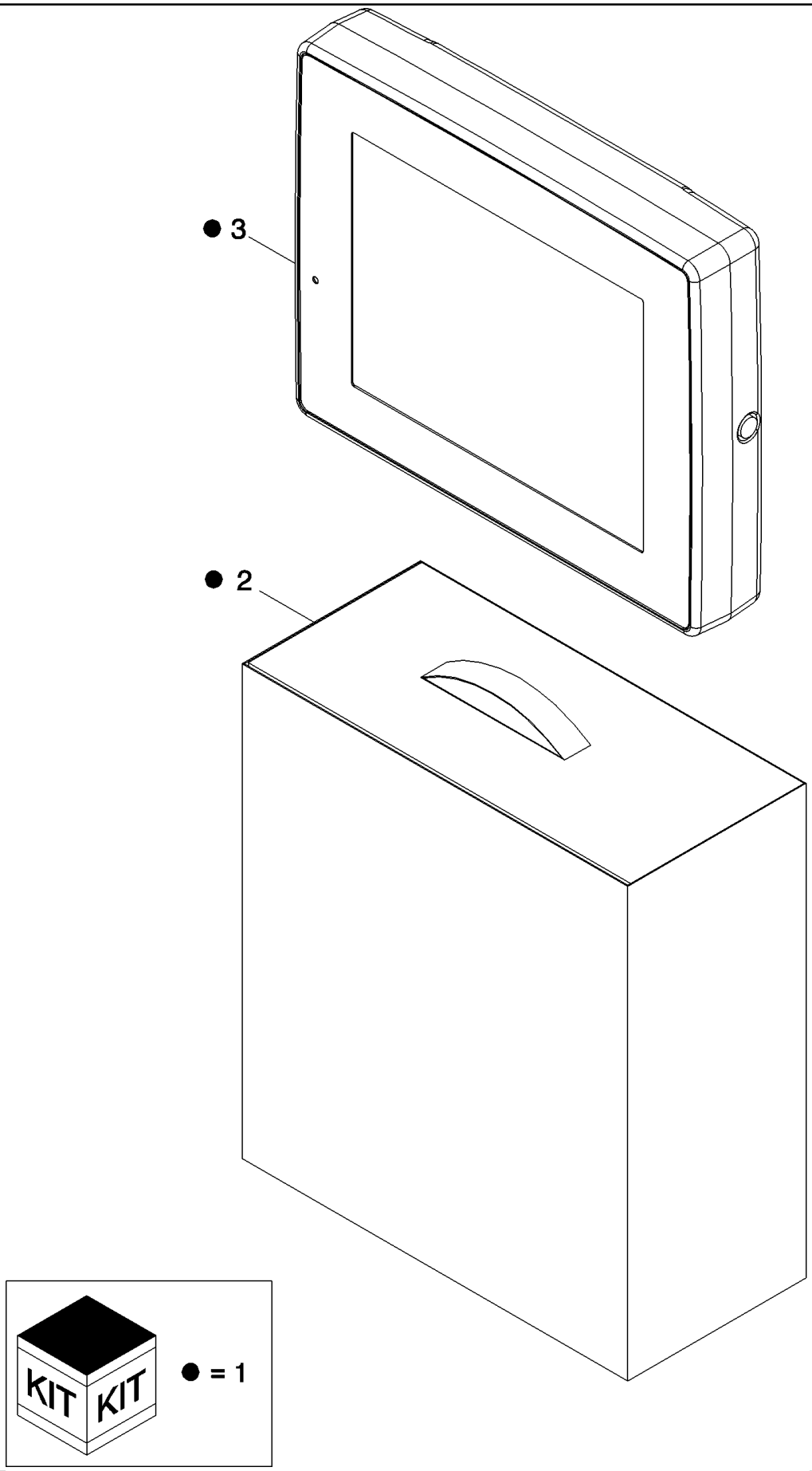

PDF created with pdfFactory trial version www.pdffactory.com

7088 AXIAL-FLOW COMBINE (EU) (4/08-)

04-55A AFS PRO 600 TOUCHSCREEN DISPLAY

ссылка	Номер детали	Кол-во	Описание
1	87668610	1	DISPLAY, Kit, AFS Pro 600 Display Service, Inc. 2, 3
2	NSS	1	NOT SERVICED SEPARATELY, BOX, Display Storage
3	NSS	1	NOT SERVICED SEPARATELY, DISPLAY, Touchscreen, Black
4	87739488	1	128 MB Compact Flash With Adapter

PDF created with pdfFactory trial version www.pdffactory.com

04-56 BEACON, ROTATING

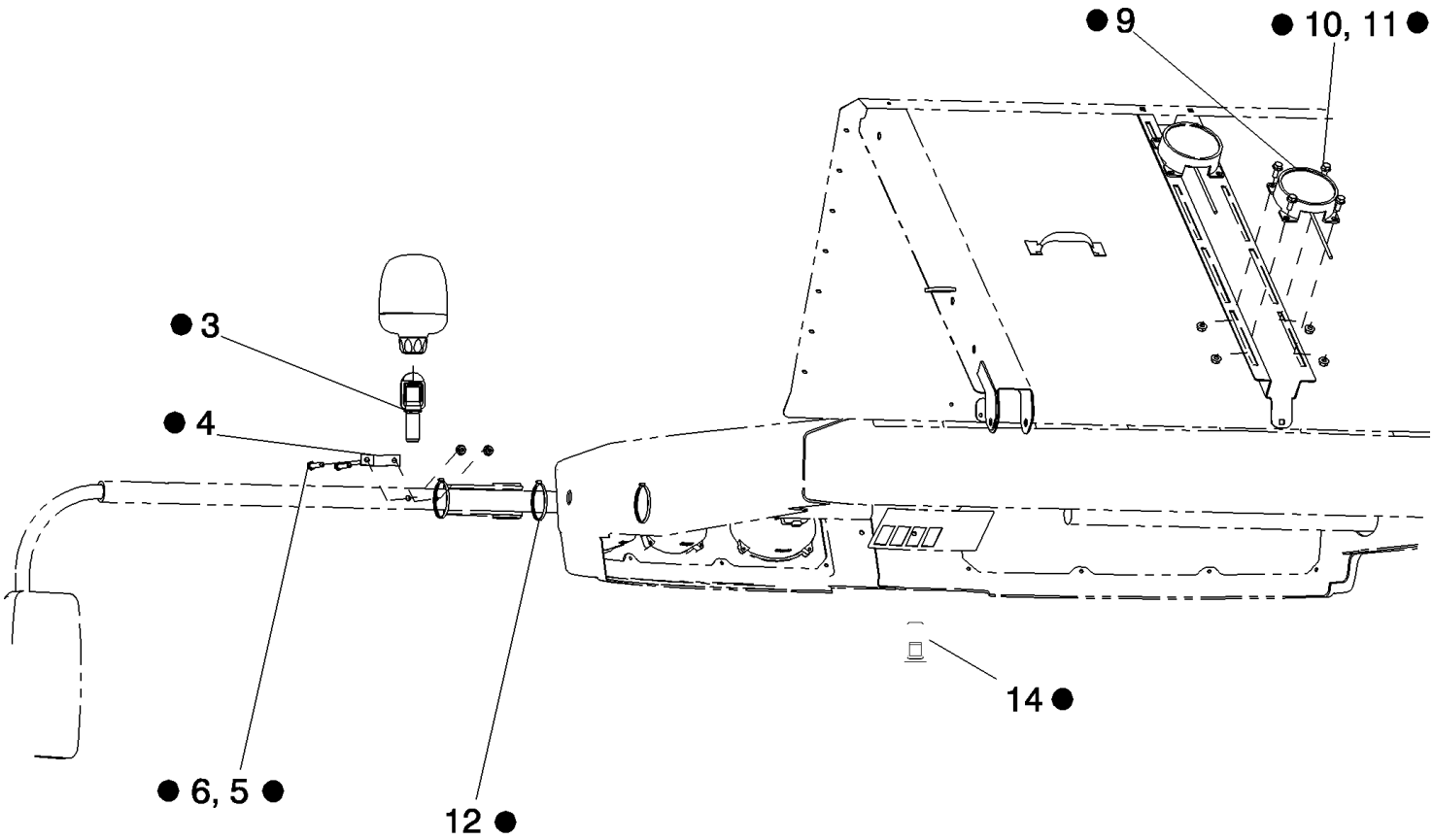

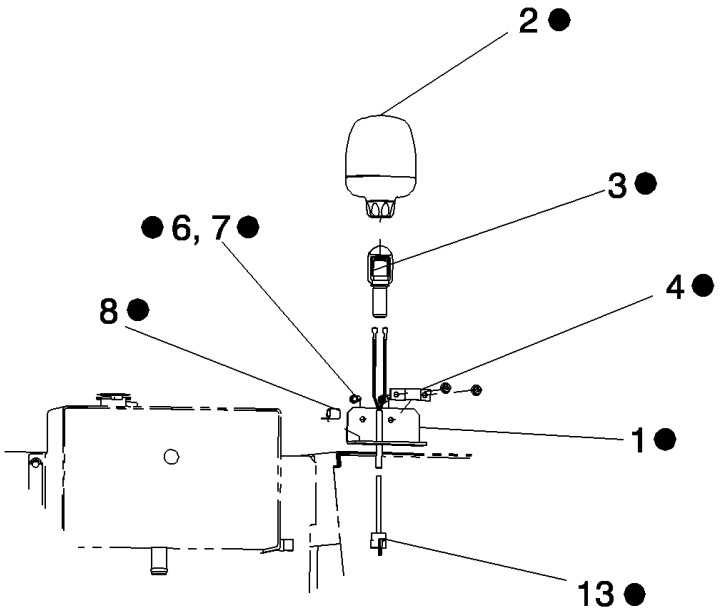

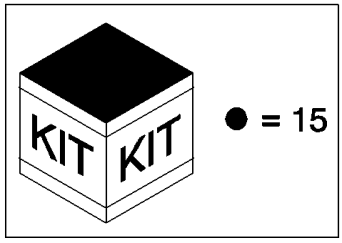

● = 15

PDF created with pdfFactory trial version www.pdffactory.com

7088 AXIAL-FLOW COMBINE (EU) (4/08-)

04-56 BEACON, ROTATING

ссылка	Номер детали	Кол-во	Описание
1	87741406	1	BRACKET, Beacon Light
2	84126541	2	BEACON, Light, 12V
3	244106A1	2	CONNECTOR, ELEC,
4	3177099R1	2	CLAMP, Beacon Collar
5	814-8050	2	BOLT, Hex, M8 x 50, 8.8,
6	825-5148	4	NUT, M8, Flg Ser,
7	614-8020	2	BOLT, Hex, M8 x 20, 8.8,
8	516-23127	1	CLAMP, J, 9/16" Insul, 3/8" Bolt,
9	87701176	1	SWITCH, Grain Bin
10	87656137	4	BOLT, Hex Flg, M8 x 20, 10.9, Full Thd,
11	86507066	4	NUT, M8 x 1.25, Flg, Cl 10,
12	289862C1	3	STRAP, CABLE, 3/16" x 7",
13	87345075	1	HARNESS, WIRE, Beacon Light
14	124096A1	1	SWITCH, Beacon Light
15	87726727	1	KIT, SERVICE, DIA, Beacon Light, Inc. 1-14

PDF created with pdfFactory trial version www.pdffactory.com

04-57 AFS100 ANTENNA AND MOUNTING

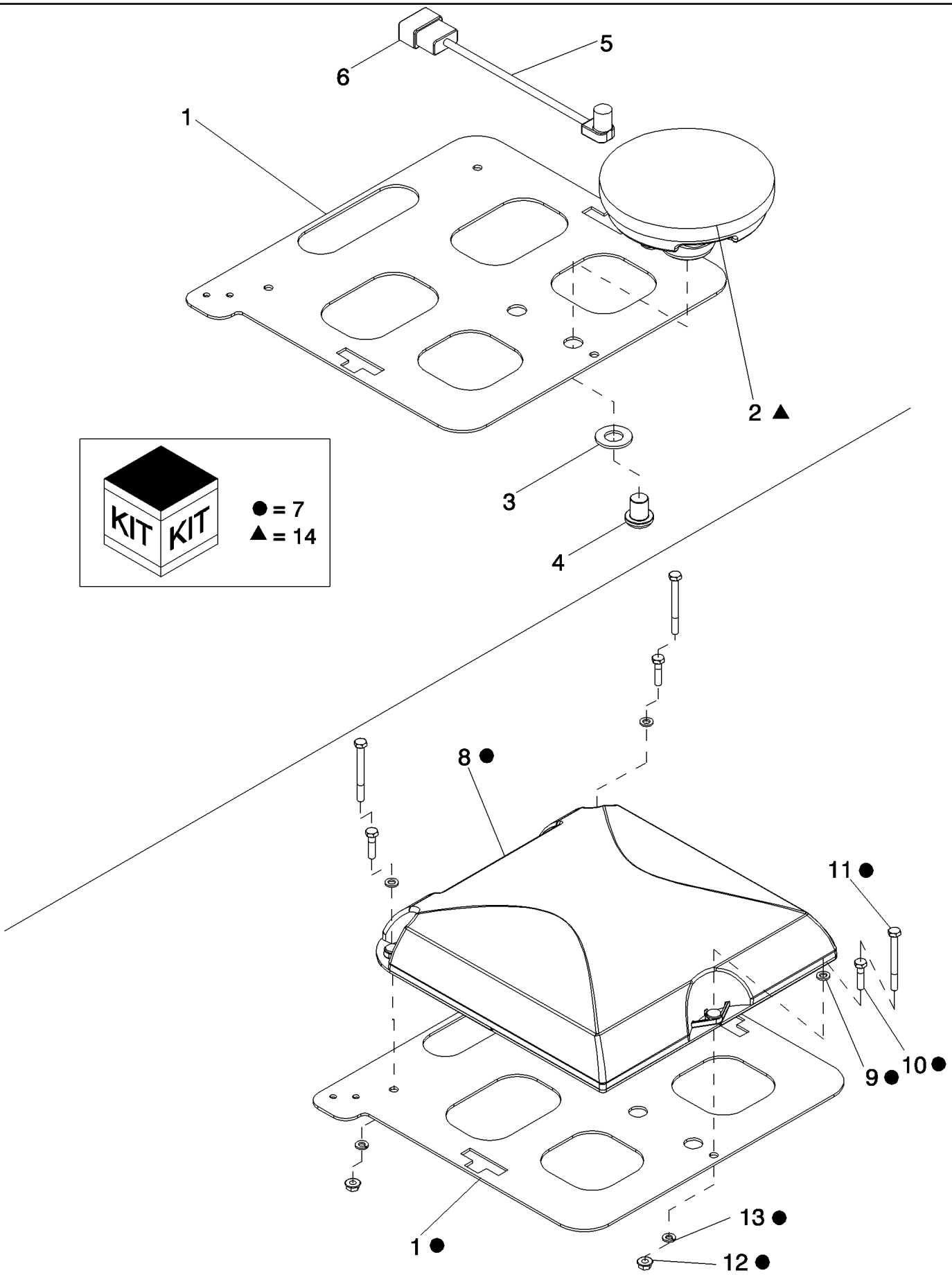

PDF created with pdfFactory trial version www.pdffactory.com

7088 AXIAL-FLOW COMBINE (EU) (4/08-)

04-57 AFS100 ANTENNA AND MOUNTING

ссылка	Номер детали	Кол-во	Описание
1	87496985	2	PLATE, MOUNTING, AFS100 Antenna
2	87491749	1	ANTENNA, WAAS/EGNOS
3	140048	1	WASHER, SPRING, Belleville, M16,
4	87106351	1	SCREW, HEX SOC, Button Hd, 5/8"-11 x M19,
5	87383158	1	HARNESS, WIRE, 252 To 100 Adapter, Inc. 6
6	223672A1	1	CONNECTOR, Harness, 12-Pin
7	87595761	1	KIT, DIA, AFS262 WAAS, EGNOS, VBS, Inc. 1, 8 - 13
7	87369143	1	KIT, DIA, AFS262 WAAS/OMNISTAR, Inc. 1, 8-13
8	84148119	1	MODULE, Receiver, AFS262 WAAS, EGNOS, VBS
8	84148115	1	MODULE, GPS Receiver, AFS262 WAAS/VBS/HP/XP With Software
9	86588450	3	WASHER, M6 x 12 x 1.6 Thk,
10	86977786	3	BOLT, Hex, M6 x 25, 8.8,
11	338413	3	BOLT, Hex, M6 x 60, 8.8,
12	86511444	3	NUT, M6, Flg Ser,
13	86517328	3	WASHER, LOCK, M6,
14	84150838	1	ANTENNA, AFS162, Inc. 2

PDF created with pdfFactory trial version www.pdffactory.com

04-58 GPS GRAIN TANK MOUNTING AND HARNESS

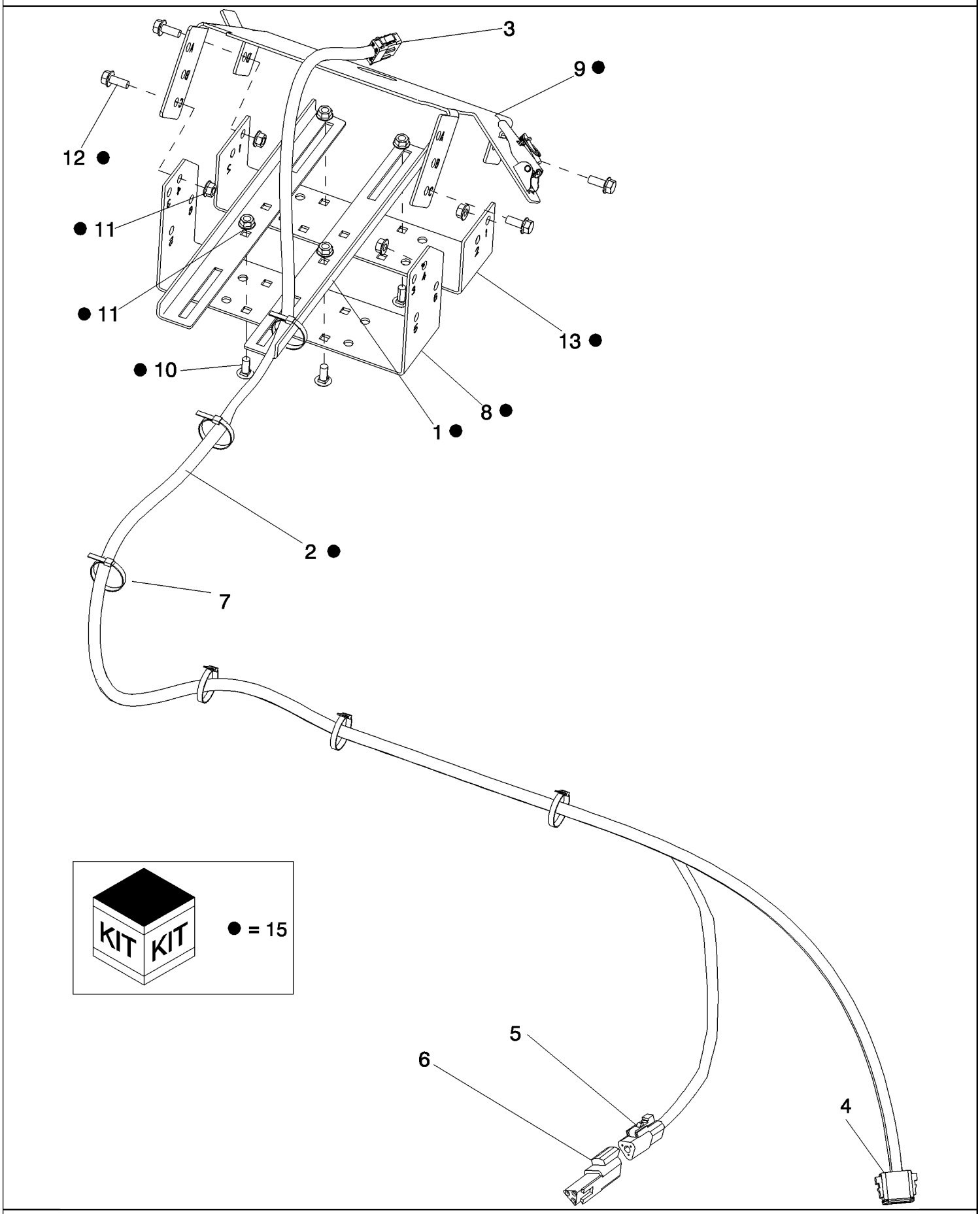

PDF created with pdfFactory trial version www.pdffactory.com

7088 AXIAL-FLOW COMBINE (EU) (4/08-)

04-58 GPS GRAIN TANK MOUNTING AND HARNESS

ссылка	Номер детали	Кол-во	Описание
1	NSS	2	NOT SERVICED SEPARATELY, BRACKET, GPS Bracket Extension
2	87550514	1	HARNESS, WIRE, AFS252 To Combine, Inc. 3 - 6
3	225402C1	1	CONNECTOR, GPS Connection, C173, 12-Pin
4	223671A1	1	CONNECTOR, ELEC, Receiver, 12-Pin
5	225295C1	1	CONNECTOR, ELEC, Can Termination, 3-Pin
6	84058092	1	CONNECTOR, TERMINAL, Can Termination, 3-Pin
7	306132C1	8	STRAP, CABLE, .30" x 14.5",
8	87335677	1	BRACKET, Receiver Mount
9	87488331	1	BRACKET, Mount, 252 Reciever
10	86507486	4	BOLT, CARRIAGE, Short NK, M8 x 20, Cl8.8, Full Thd,
11	86507066	8	NUT, M8 x 1.25, Flg, Cl 10,
12	87656137	4	BOLT, Hex Flg, M8 x 20, 10.9, Full Thd,
13	87335635	1	BRACKET, Receiver Mount
14	322358	12	WASHER, SPRING, Belleville, M8, (Not Shown)
15	87726620	1	DIA KIT, HARVESTER, GPS Grain Tank Mounting And Harness, Inc. 1, 2, 8-14

PDF created with pdfFactory trial version www.pdffactory.com

04-59 AUTO GUIDANCE CONTROL MODULE AND MOUNTING

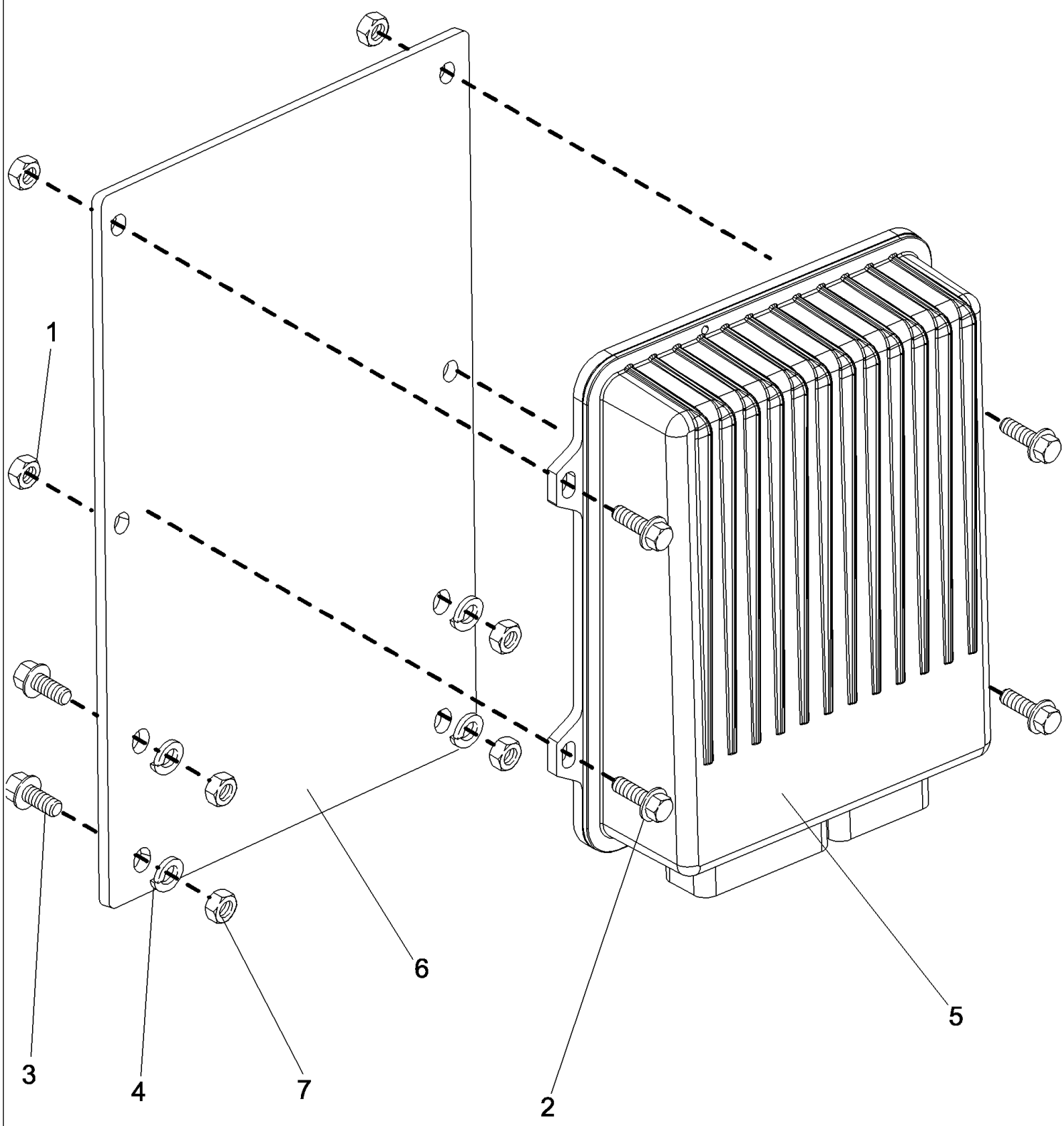

PDF created with pdfFactory trial version www.pdffactory.com

04-59 AUTO GUIDANCE CONTROL MODULE AND MOUNTING

ссылка	Номер детали	Кол-во	Описание
1	87301498	4	NUT,
2	120100	4	BOLT, Hex, M6 x 20, 8.8,
3	43127	4	BOLT, Hex, M8 x 25, 8.8,
4	322358	4	WASHER, SPRING, Belleville, M8,
5	87518983	1	KIT, NAV II Controller
6	87624731	1	BRACKET,
7	9706690	4	NUT, M8, Cl 8,

PDF created with pdfFactory trial version www.pdffactory.com

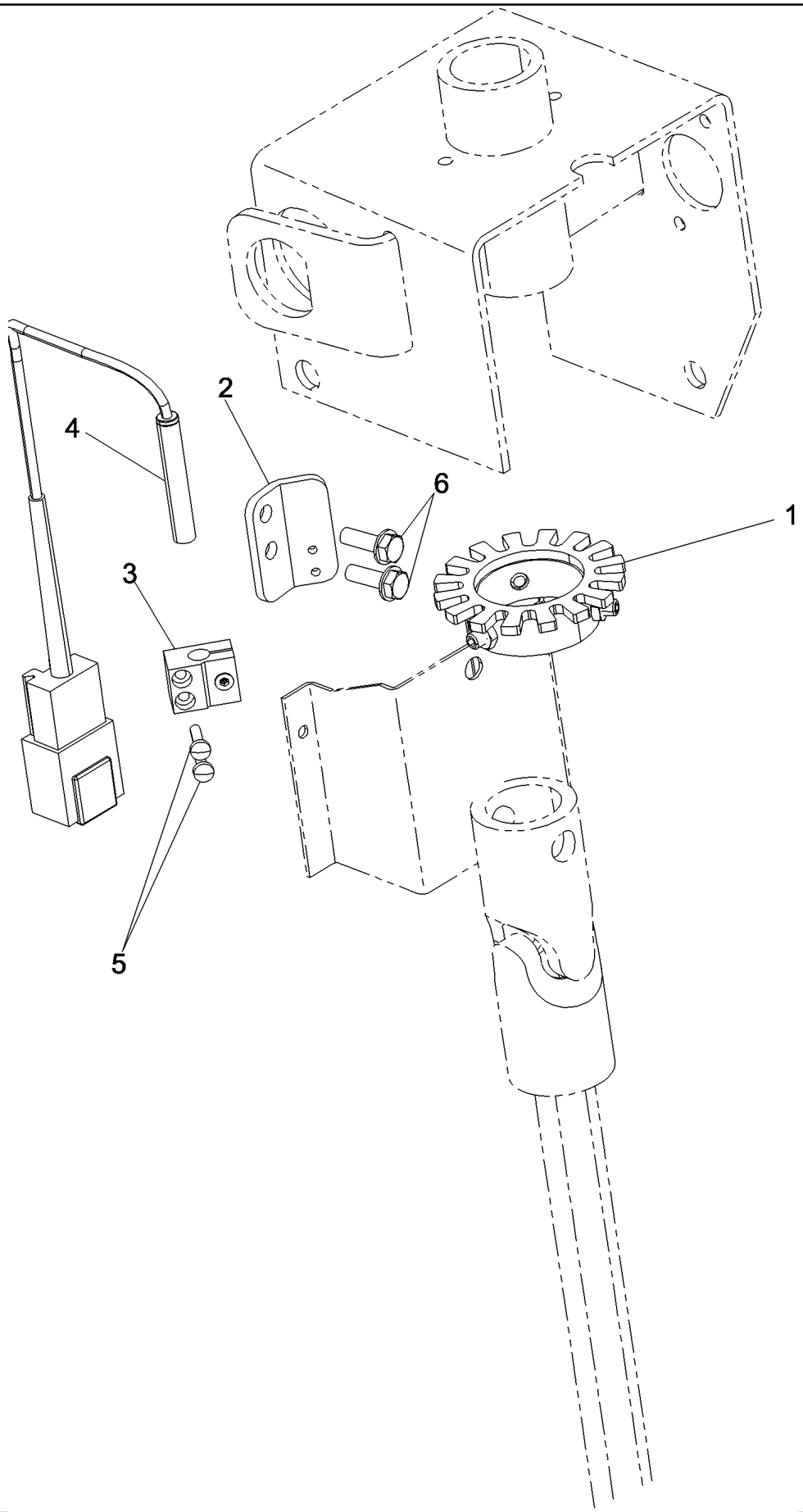

PDF created with pdfFactory trial version www.pdffactory.com

7088 AXIAL-FLOW COMBINE (EU) (4/08-)

04-60 AUTO GUIDANCE MANUAL OVERRIDE

ссылка	Номер детали	Кол-во	Описание
1	84141958	1	COUPLING, Auto Guidance Sensor
2	84141016	1	BRACKET, Auto Guidance Sensor
3	84133885	1	BRACKET, Sensor Holder
4	84177590	1	SENSOR,
5	84160007	2	SCREW,
6	191216A1	2	SCREW, SELF TAPPING, Hex Wash Hd, #10-24 x 5/8",

PDF created with pdfFactory trial version www.pdffactory.com

04-61 KIT, DIA, AFS ACCUGUIDE READY

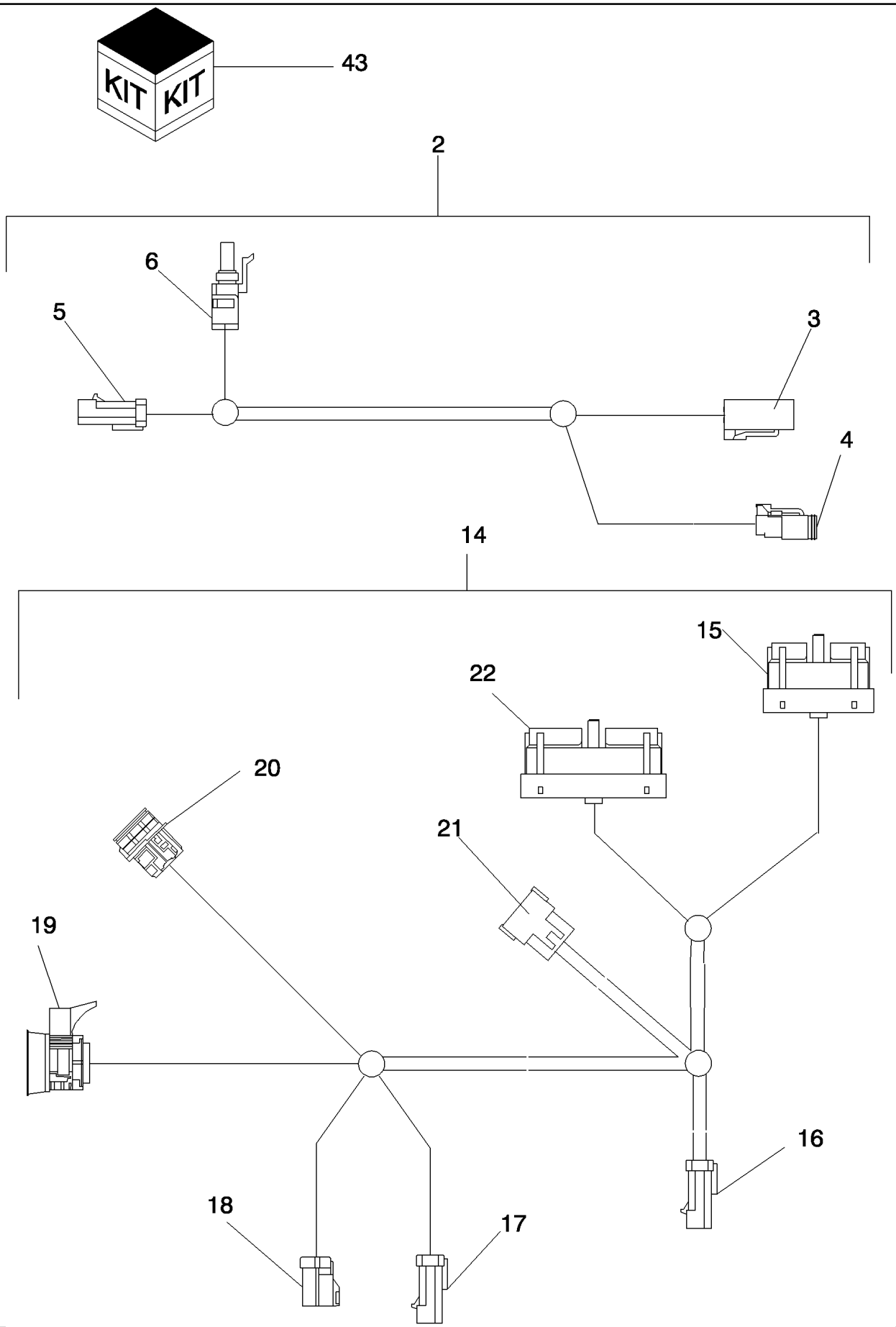

PDF created with pdfFactory trial version www.pdffactory.com

7088 AXIAL-FLOW COMBINE (EU) (4/08-)

04-61 KIT, DIA, AFS ACCUGUIDE READY

ссылка	Номер детали	Кол-во	Описание
1	86624137	4	WASHER, .266" x 1/2" x .060", (Not Shown)
2	87676255	1	HARNESS, WIRE, Auto Guidance Steering Valve, Inc. 3 - 6
3	NSS	1	NOT SERVICED SEPARATELY, CONNECTOR, Steering Coil, C167, 4-Pin
4	NSS	1	NOT SERVICED SEPARATELY, CONNECTOR, Enable Solenoid, C168, 2-Pin
5	NSS	1	NOT SERVICED SEPARATELY, CONNECTOR, C257, 10-Pin
6	NSS	1	NOT SERVICED SEPARATELY, CONNECTOR, Steering Override, C165, 4-Pin
7	198824C1	1	GROMMET, (Not Shown)
8	86566990	10	STRAP, CABLE, M4.8 x 292 L, (Not Shown)
9	87610598	1	SWITCH, Auto Guidance, (Not Shown)
10	87614353	1	BRACKET, Sensor, (Not Shown)
11	120062	1	BOLT, Hex, M8 x 70, 8.8, (Not Shown)
12	15861321	2	BOLT, (Not Shown)
13	87414866	2	RELAY, (Not Shown)
14	84131650	1	HARNESS, Auto Guidance Chassis, Inc. 15 - 22
15	NSS	1	NOT SERVICED SEPARATELY, CONNECTOR, C163, 24-Pin
16	NSS	1	NOT SERVICED SEPARATELY, CONNECTOR, C192, 10-Pin
17	NSS	1	NOT SERVICED SEPARATELY, CONNECTOR, C171, 4-Pin
18	NSS	1	NOT SERVICED SEPARATELY, CONNECTOR, C172, 4-Pin
19	NSS	1	NOT SERVICED SEPARATELY, CONNECTOR, C004, 34-Pin
20	NSS	1	NOT SERVICED SEPARATELY, CONNECTOR, C004A, 34-Pin
21	223672A1	1	CONNECTOR, C148, 12-Pin
22	NSS	1	NOT SERVICED SEPARATELY, CONNECTOR, C162, 40-Pin
23	9706690	1	NUT, M8, Cl 8, (Not Shown)
24	322355	6	WASHER, Belleville, M4, (Not Shown)
25	86050251	6	SCREW, Cross Pan Hd, M4 x 25, (Not Shown)
26	322358	2	WASHER, SPRING, Belleville, M8, (Not Shown)
27	100012	6	NUT, M4, Cl 8, (Not Shown)
28	409-7412	4	BOLT, Hex Flg, 1/4"-20 x 3/4", Serr, (Not Shown)
29	425-104	4	NUT, 1/4"-20, G5, (Not Shown)
30	426-1096	1	BOLT, Hex, 5/8"-11 x 6", G8, (Not Shown)
31	515-2163	3	CLAMP, 1/8", Insul, 1/4" Bolt, (Not Shown)
32	87698761	1	BOLT, (Not Shown)
33	87698753	2	BOLT, (Not Shown)
34	87492891	1	CHANNEL, Harness, (Not Shown)
35	87723298	1	BRACKET, Steering Sensor Cover, (Not Shown)
36	515-2395	1	CLAMP, 3/8", Insul, 3/8" Bolt, (Not Shown)
37	87301498	2	NUT, (Not Shown)
38	87016	4	WASHER, 3/8", SAE, (Not Shown)
39	87021006	1	BOLT, Hex Flg, M10 x 16, 10.9, Full Thd, (Not Shown)
40	87743199	1	MODULE, Auto Sense, (Not Shown)
41	87620805	1	HARNESS, Trimble Auto Sense To Combine, (Not Shown)

PDF created with pdfFactory trial version www.pdffactory.com

04-61 KIT, DIA, AFS ACCUGUIDE READY

ссылка	Номер детали	Кол-во	Описание
42	84139340	1	CONDUIT, (Not Shown)
43	87730768	1	KIT, DIA, AFS Accuguide Ready

PDF created with pdfFactory trial version www.pdffactory.com

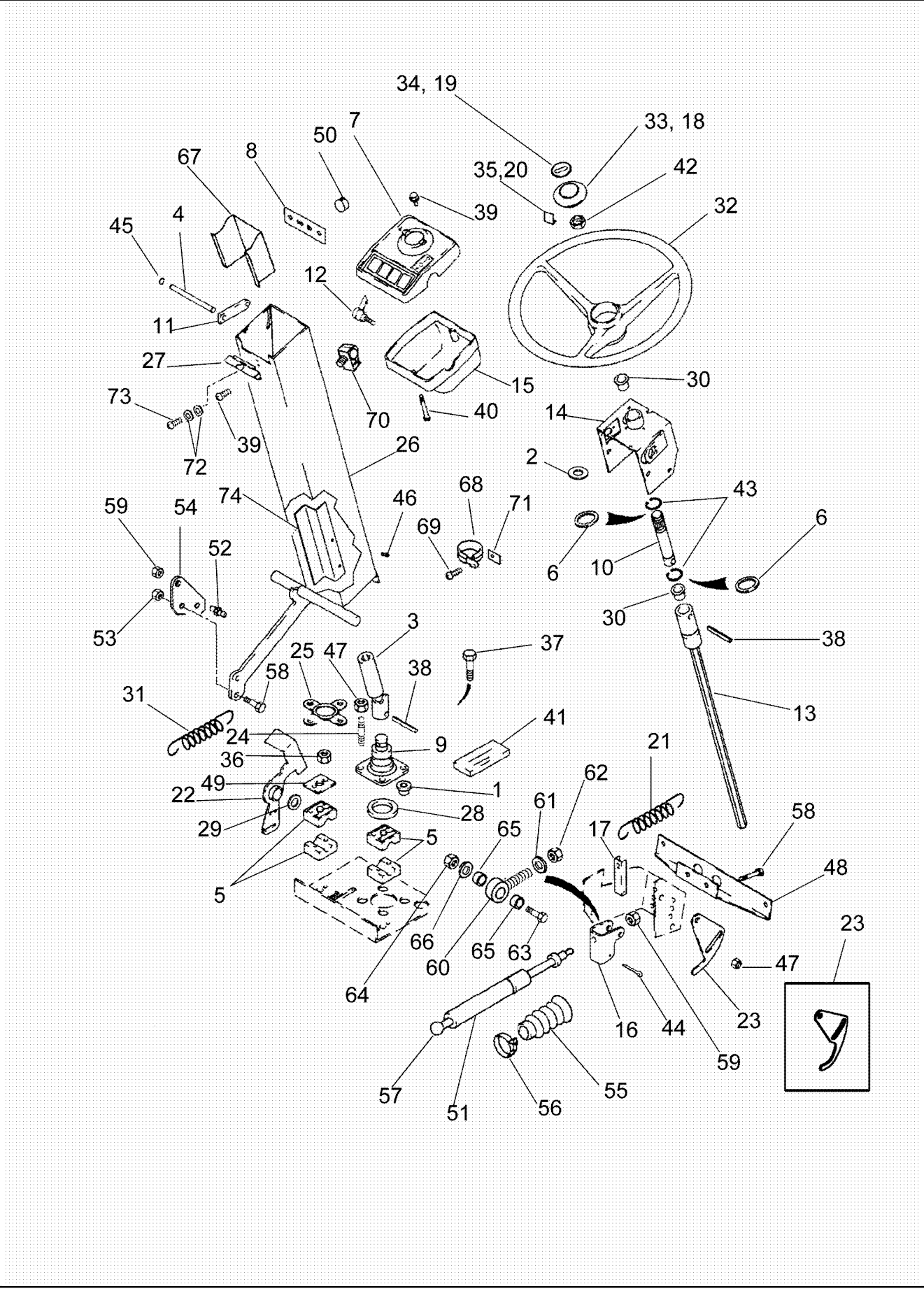

PDF created with pdfFactory trial version www.pdffactory.com

7088 AXIAL-FLOW COMBINE (EU) (4/08-)

05-01 STEERING COLUMN - WHEEL

ссылка	Номер детали	Кол-во	Описание
1	104809C1	4	BUSHING, Vibration Damper
2	495-81048	AR	WASHER, 29/32" x 1 1/4" x .030",
3	119760A1	1	JOINT, UNIVERSAL, Lower
4	119830A1	1	ROD, Pivot, 9.5 x 111 mm
5	120326A2	4	BEARING,
6	495-81051	2	WASHER, 29/32" x 1 1/4" x .060",
7	87663389	1	COVER, PROTECTIVE, Steering Console
8	120332A1	1	DECAL, Directional Arrows
9	120338A2	1	STEERING COLUMN,
10	124054A3	1	SHAFT, Steering Wheel
11	127040A2	1	PLATE,
12	129255A1	1	HANDLE, Tilt Linkage
13	130952A2	1	JOINT, UNIVERSAL, Upper Steering
14	84131623	1	BRACKET,
15	130956A4	1	COVER, Lower
16	224761A1	1	CLEVIS, Gas Spring
17	130958A2	1	CHANNEL, Spring Release
18	238697A1	1	CAP, Steering Wheel, With AFS Insert, Inc.19, 20, If Equipped
19	238696A1	1	SYMBOLS, Advanced Farming System
20	1329896C1	3	CLASP,
21	130962A2	1	SPRING, 27.9 OD x 122 mm
22	136798A1	1	PEDAL, Tilt Release
23	446632A1	1	BRACKET, Steering Pump
24	136802A1	1	STUD, 10 x 48 mm, Pump Mounting
25	136805A1	1	RETAINER, Stub Shaft
26	192374A5	1	STEERING COLUMN, Inc. Decal 239509A1
27	136919A1	1	COVER,
28	148481C1	1	SEAL, Hand Pump Shaft Dust
29	185062R1	1	BUSHING,
30	373445R1	2	BUSHING,
31	182652A1	1	SPRING, 27.9 OD x 122 mm, Pedal Return
32	251342A1	1	STEERING WHEEL,
33	187177A1	1	CAP, Inc. 34, 35, If Equipped
34	1342054C1	1	PLASTIC PLUG, Black
35	1329896C1	3	CLASP,
36	832-10408	4	NUT, LOCK, M8 x 1.25, Cl 8,
37	905-10035	3	BOLT, Hex Serr Flg, M10 x 35,
38	38-32420	2	PIN, 3/8" x 1 1/4", Coiled,
39	260-14512	2	SCREW, SELF TAPPING, Cross Pan Hd, #10 x 3/4",
40	540-714	2	SCREW, Cross Pan Hd, M3 x 45,
41	130961A1	2	SEAL,

PDF created with pdfFactory trial version www.pdffactory.com

ссылка	Номер детали	Кол-во	Описание
42	F19646	1	NUT, SPECIAL, 13/16"-20, Thin,
43	100-1187	2	RING, SNAP, #87, Ext,
44	432-828	2	PIN, SPLIT (COTTER), 1/8" x 1 3/4",
45	100-3337	2	RING, LOCKING, #37, .300" Dia, E-Type,
46	191216A1	2	SCREW, SELF TAPPING, Hex Wash Hd, #10-24 x 5/8",
47	825-51410	3	NUT, M10, Flg Ser,
48	120143A4	1	SUPPORT, Front Cover
49	185268A1	2	PLATE, Bearing Cover
50	353-411	1	PLUG, Dome, 1.000" hole, Nylon,
51	224357A1	1	CYLINDER, Locking Gas
52	142597A1	1	STUD, Ball
53	829-1410	1	NUT, M10, Cl 10,
54	223917A1	1	PLATE, Ball Stud Mounting
55	195089A1	1	BOOT, Gas Cylinder
56	214-1516	1	CLAMP, HOSE, #16, .81/1.50 Type F Worm, W/liner,
57	3233348R1	1	CLIP, Cylinder
58	614-8020	4	BOLT, Hex, M8 x 20, 8.8,
59	825-5148	4	NUT, M8, Flg Ser,
60	224235A1	1	BALL JOINT, Gas Spring
61	496-21034	1	WASHER, 11/32" x 11/16" x 0.89", HDN,
62	425-115	1	NUT, 5/16"-24, G5,
63	413-528	1	BOLT, Hex, 5/16"-18 x 1 3/4", G5,
64	425-105	1	NUT, 5/16"-18, G5,
65	224089A1	2	SPACER, Ball Joint
66	492-11031	2	WASHER, LOCK, 5/16",
67	231985A1	1	GUARD, Wiring
68	515-23254	1	CLAMP, 1", Insul, 3/8" Bolt,
69	1276119C1	1	SCREW, SELF TAPPING, Cross Pan Hd, #10 x 5/8",
70	233185A1	1	CLIP, ELECTRICAL,
71	233186A1	1	CLIP, ELECTRICAL,
72	492-11010	1	WASHER, LOCK, #10,
73	1267247C1	3	SCREW,
74	400648A1	1	SHIELD, Wiring Harness

PDF created with pdfFactory trial version www.pdffactory.com

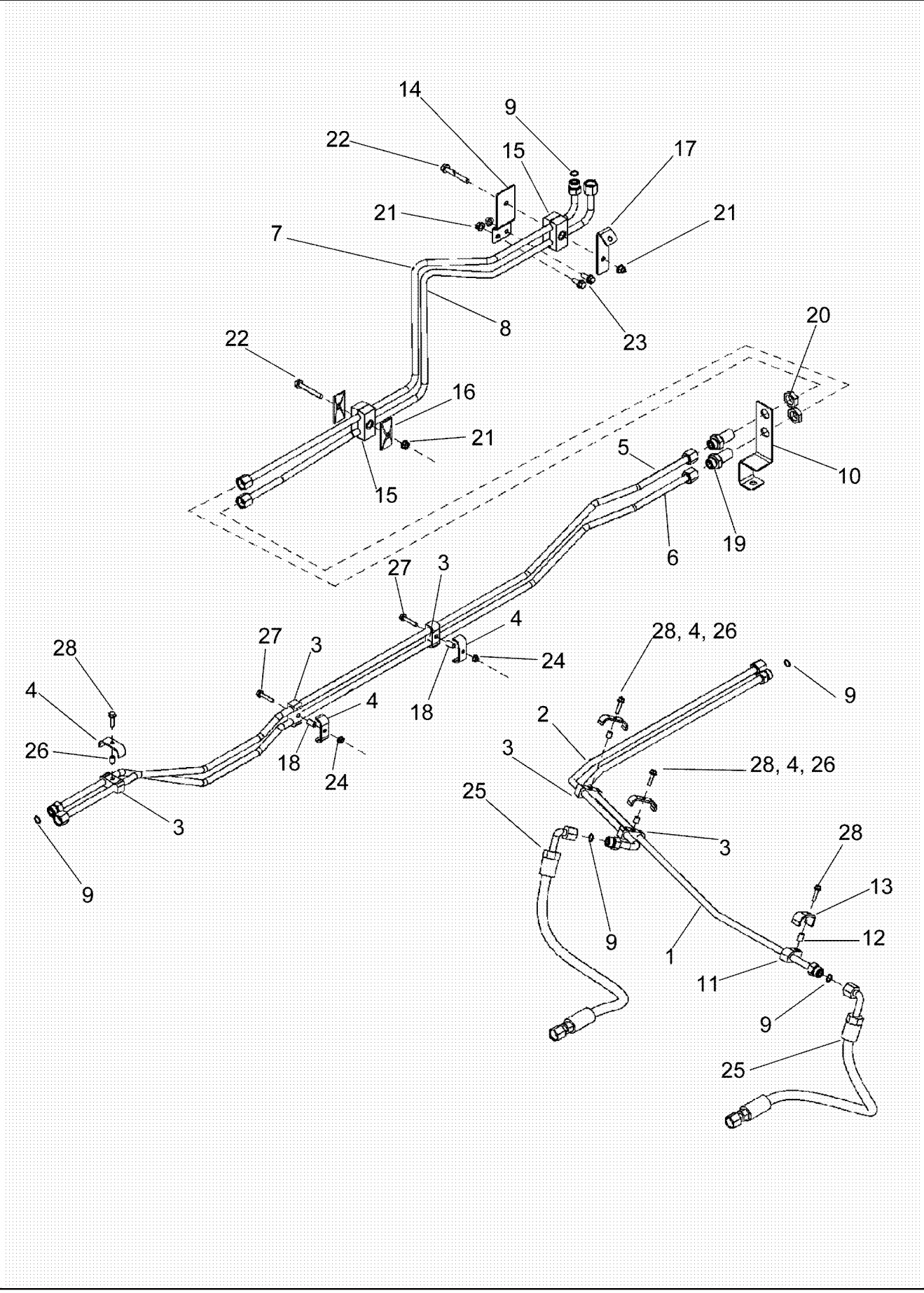

PDF created with pdfFactory trial version www.pdffactory.com

7088 AXIAL-FLOW COMBINE (EU) (4/08-)

05-02 HYDRAULICS - STEERING CIRCUIT

ссылка	Номер детали	Кол-во	Описание
1	84130523	1	TUBE ASSY., Steering Rear Right
2	84130522	1	TUBE ASSY., Steering Rear Left
3	87589471	5	CLAMP, SPECIAL, Tube Clamp
4	418784A1	5	PLATE, Tube Clamp
5	87673792	1	TUBE ASSY., Steering Middle Right
6	87673791	1	TUBE ASSY., Steering Middle Left
7	87544725	1	TUBE ASSY., Steering Right
8	87544724	1	TUBE ASSY., Steering Left
9	238-6014	5	O-RING, -014, 90 Duro, .489" ID x .070" Thk,
10	87662863	1	SUPPORT, Steering Line Bulkhead
11	87644666	1	CLAMP,
12	87644729	1	BUSHING, LARGE, Spacer Tube Clamp
13	87644667	1	CLAMP, Tube Clamp
14	87389212	1	SUPPORT ASSY., Steering Tubes, Front
15	87000149	2	CLAMP,
16	1347127C1	2	PLATE, Hose Clamp
17	87673666	1	BRACKET, Feeder Lift Hose
18	418785A1	2	SPACER, Sleeve, Tube Clamp
19	201-121	2	CONNECTOR, HYD., 13/16"-16, Blkhd, ORFS,
20	201-903	2	NUT, LOCK, Blkhd, 13/16"-16,
21	86507066	4	NUT, M8 x 1.25, Flg, Cl 10,
22	87670761	2	BOLT,
23	87656137	2	BOLT, Hex Flg, M8 x 20, 10.9, Full Thd,
24	86050300	2	NUT, M6 x 1, Flg, Cl10,
25	87644620	2	HOSE ASSY., Steering
26	87560349	3	BUSHING, LARGE, Spacer Tube Clamp
27	857-6035	2	BOLT,
28	87670758	4	BOLT,

PDF created with pdfFactory trial version www.pdffactory.com

05-03 HYDRAULICS - STEERING PUMP

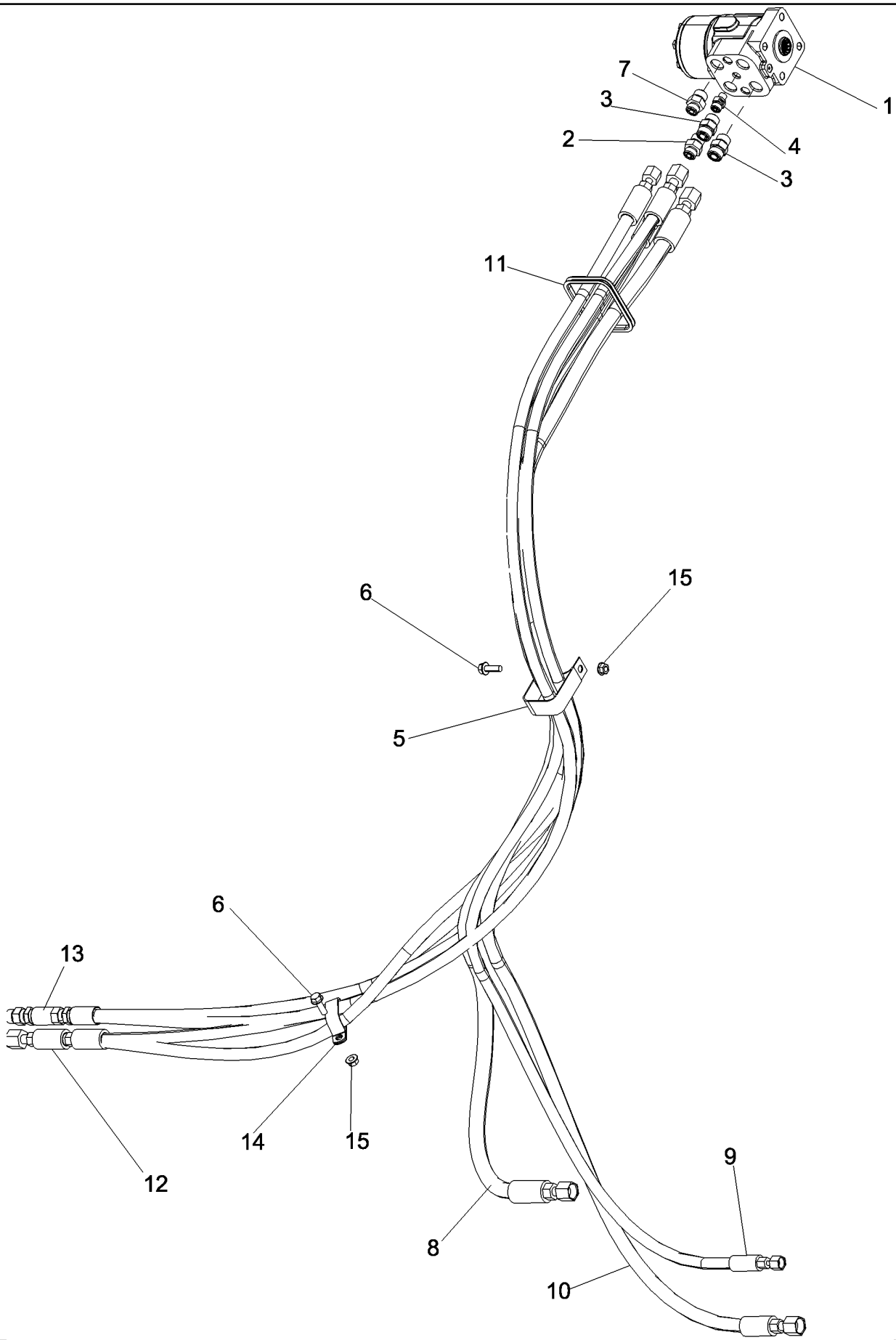

PDF created with pdfFactory trial version www.pdffactory.com

7088 AXIAL-FLOW COMBINE (EU) (4/08-)

05-03 HYDRAULICS - STEERING PUMP

ссылка	Номер детали	Кол-во	Описание
1	87739495	1	PUMP, Steering, 160 cc/rev
2	175170A1	1	ADAPTER,
3	9992305	2	CONNECTOR, HYD., 13/16"-16 ORFS x 3/4"-16 ORB,
4	87744594	1	CONNECTOR, HYD.,
5	1301387C2	1	CLIP,
6	87698833	2	BOLT,
7	87672176	1	CONNECTOR, HYD.,
8	87365366	1	HOSE ASSY., Steering Return
9	84126067	1	HOSE ASSY., Steering H.P. Signal
10	84126068	1	HOSE ASSY., Steering H.P. Supply
11	324826A1	1	GROMMET,
12	87389503	1	HOSE ASSY., Steering Work Front Right Pressure
13	87389504	1	HOSE ASSY., Steering Work Front Left Pressure
14	470375C1	1	CLAMP,
15	86507066	2	NUT, M8 x 1.25, Flg, Cl 10,

PDF created with pdfFactory trial version www.pdffactory.com

05-04 AXLE, STEERING SUPPORT AND PIVOT SHAFT

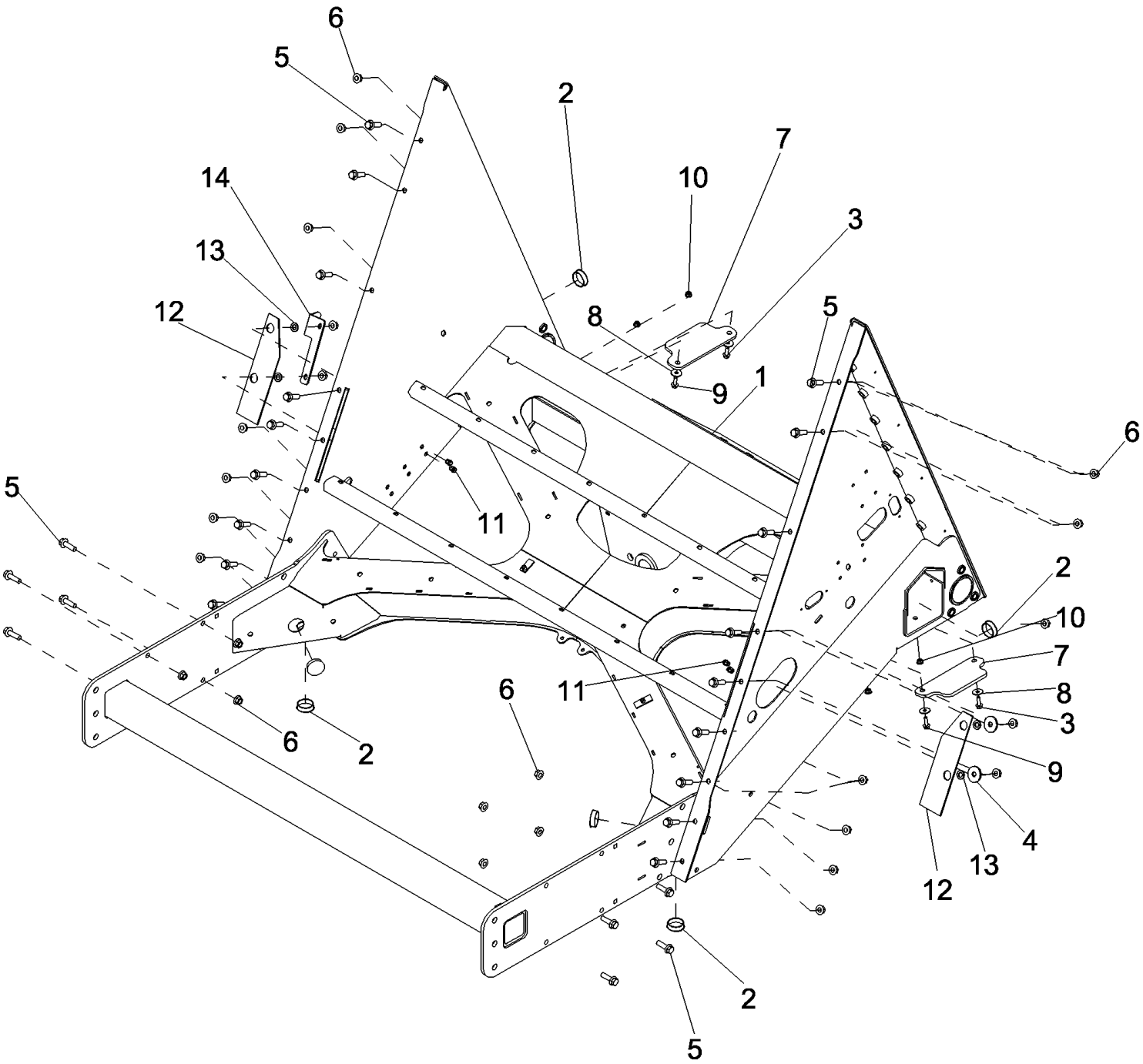

PDF created with pdfFactory trial version www.pdffactory.com

7088 AXIAL-FLOW COMBINE (EU) (4/08-)

05-04 AXLE, STEERING SUPPORT AND PIVOT SHAFT

ссылка	Номер детали	Кол-во	Описание
1	87687790	1	SUPPORT ASSY., Rear Axle
2	87612755	6	PLUG,
3	87030775	2	BOLT, Hex Flg, M8 x 30, 10.9, Full Thd,
4	9511052	2	WASHER, M12 x 44 x 4,
5	87695413	26	BOLT,
6	86512497	26	NUT, M12 x 1.75, Flg, Cl 10,
7	87687616	2	PAD,
8	9846522	4	WASHER,
9	87698833	2	BOLT,
10	87681210	4	NUT, Hex, M8, Cl 10,
11	87697608	4	NUT,
12	87615678	2	CANVAS, Hood Extension
13	86625255	4	WASHER, M13.5 x 24.5 x 3, HT,
14	84136324	1	BRACKET, Fixed Spreader Drive Shield

PDF created with pdfFactory trial version www.pdffactory.com

05-05 AXLE ASSEMBLY, REAR, NON - POWER GUIDE AXLE

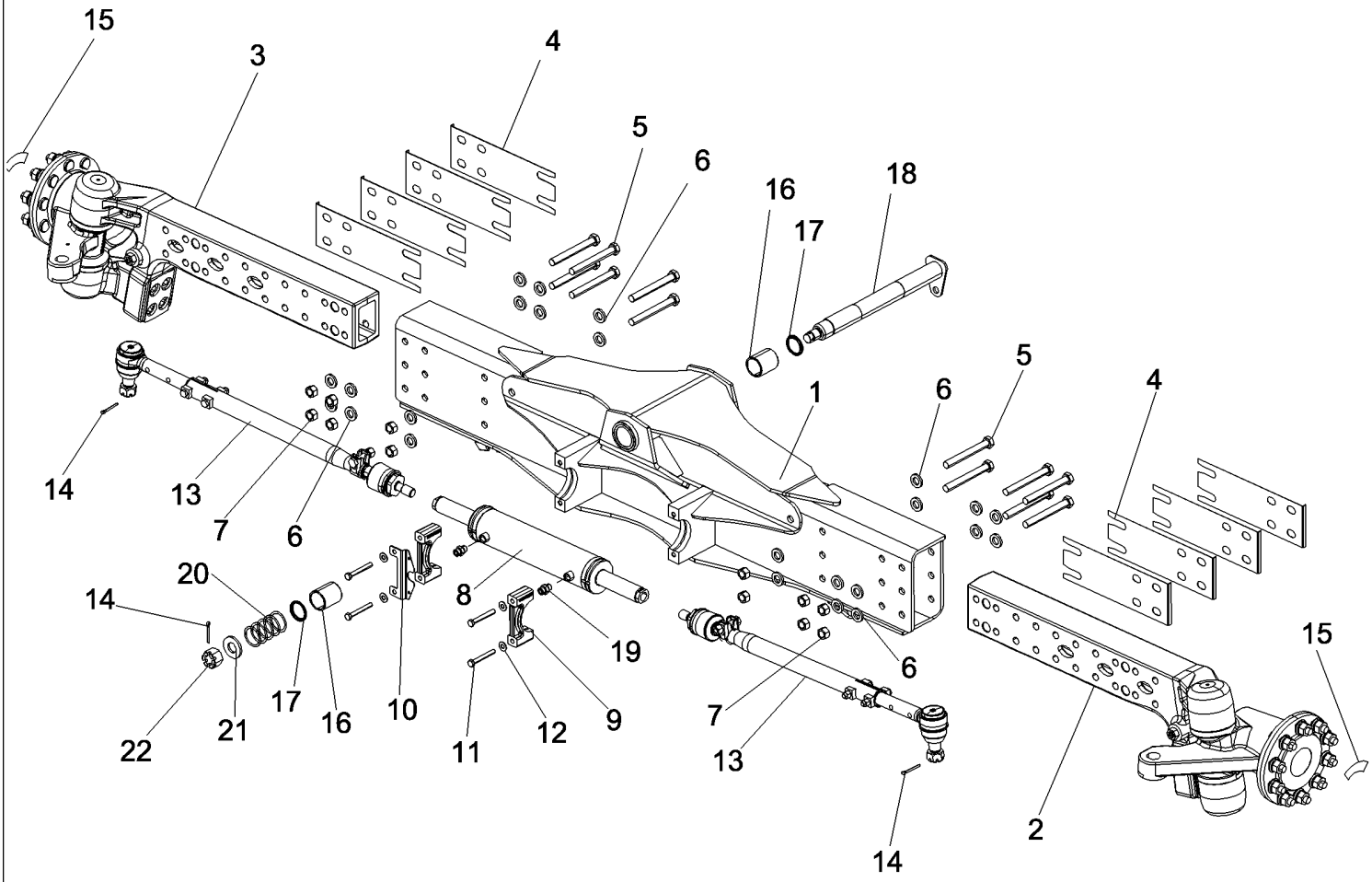

PDF created with pdfFactory trial version www.pdffactory.com

7088 AXIAL-FLOW COMBINE (EU) (4/08-)

05-05 AXLE ASSEMBLY, REAR, NON - POWER GUIDE AXLE

ссылка	Номер детали	Кол-во	Описание
1	87717640	1	AXLE, Rear Center
2	NSS	1	NOT SERVICED SEPARATELY, EXTENSION AND STEERING KNUCKLE, Left Hand, See Figure 05-07
3	NSS	1	NOT SERVICED SEPARATELY, EXTENSION AND STEERING KNUCKLE, Right Hand, See Figure 05-07
4	87573934	2	SHIM, Rear Axle
5	84444625	10	BOLT, Hex, M20 x 170, 8.8,
5	412290	2	BOLT, Hex, M20 x 180, 8.8,
6	9850384	24	WASHER, M23 x 40 x 0.5, HT,
7	84100564	12	NUT, LOCK, M20, GC,
8	87674051	1	CYLINDER STEERING,
9	87582995	2	RETAINER,
10	87753056	1	BRACKET, Steering Cylinder
11	86508581	4	BOLT, Hex, M12 x 90, 8.8,
12	140046	4	WASHER, SPRING, Belleville, M12,
13	NSS	2	NOT SERVICED SEPARATELY, TIE-ROD, See Figure 05-10
13	NSS	2	NOT SERVICED SEPARATELY, TIE-ROD, 3.3 m, See Figure 05-10
14	432-1632	3	PIN, SPLIT (COTTER), 1/4" x 2",
15	87108677	2	DECAL, Wheel Bolt Torque
16	84334438	2	BUSHING,
17	84069736	2	SEAL,
18	84074397	1	SHAFT, Front
19	86579676	2	CONNECTOR, HYD., 13/16"-16 ORFS x M18 x 1.5 ORB,
20	539450	2	SHIM, 0.5mm Thk,
21	327802	1	WASHER, M31 x 65 x 6,
22	390822	1	NUT, SLOTTED, M30 x 1.5, Cl 8,

PDF created with pdfFactory trial version www.pdffactory.com

05-06 AXLE ASSEMBLY, REAR, POWER GUIDE AXLE

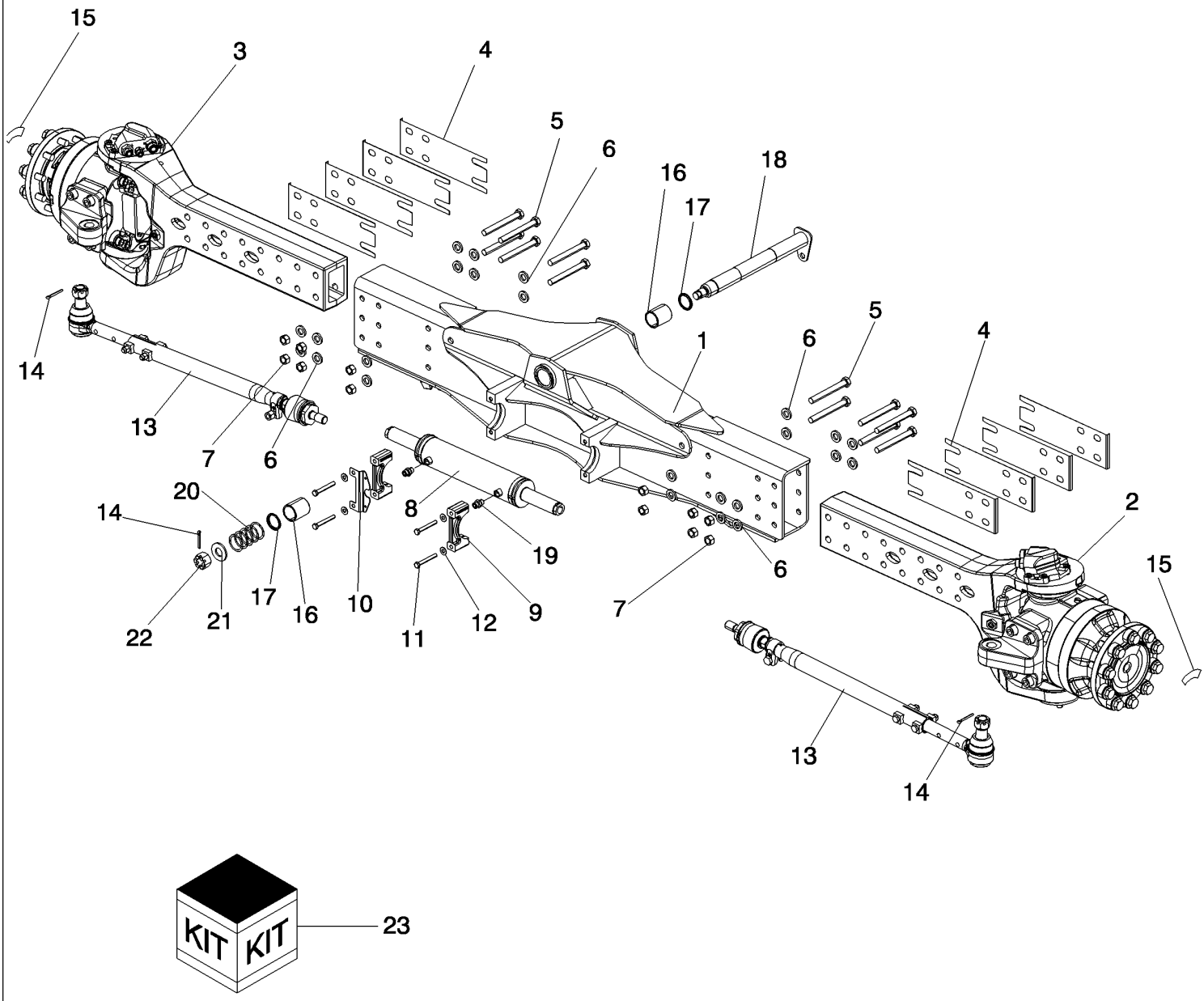

PDF created with pdfFactory trial version www.pdffactory.com

7088 AXIAL-FLOW COMBINE (EU) (4/08-)

05-06 AXLE ASSEMBLY, REAR, POWER GUIDE AXLE

ссылка	Номер детали	Кол-во	Описание
1	87717640	1	AXLE, Rear Center
2	NSS	1	NOT SERVICED SEPARATELY, EXTENSION AND STEERING KNUCKLE, Left Hand, See Figure 05-08
3	NSS	1	NOT SERVICED SEPARATELY, EXTENSION AND STEERING KNUCKLE, Right Hand, See Figure 05-08
4	87573934	2	SHIM, Rear Axle
5	84444625	10	BOLT, Hex, M20 x 170, 8.8,
5	412290	2	BOLT, Hex, M20 x 180, 8.8,
6	9850384	24	WASHER, M23 x 40 x 0.5, HT,
7	84100564	12	NUT, LOCK, M20, GC,
8	87674051	1	CYLINDER STEERING,
9	87582995	2	RETAINER,
10	87753056	1	BRACKET, Steering Cylinder
11	86508581	4	BOLT, Hex, M12 x 90, 8.8,
12	140046	4	WASHER, SPRING, Belleville, M12,
13	NSS	2	NOT SERVICED SEPARATELY, TIE-ROD, See Figure 05-10
14	432-1632	3	PIN, SPLIT (COTTER), 1/4" x 2",
15	87108678	2	DECAL, Wheel Bolt Torque
16	84334438	2	BUSHING,
17	84069736	2	SEAL,
18	84074397	1	SHAFT, Front
19	86579676	2	CONNECTOR, HYD., 13/16"-16 ORFS x M18 x 1.5 ORB,
20	539450	2	SHIM, 0.5mm Thk,
21	327802	1	WASHER, M31 x 65 x 6,
22	390822	1	NUT, SLOTTED, M30 x 1.5, Cl 8,
23	84138714	1	DIA KIT, HARVESTER, Power Guide Axle

PDF created with pdfFactory trial version www.pdffactory.com

05-07 EXTENSION, STEERING KNUCKLE AND HUB, REAR AXLE, NON - POWER GUIDE AXLE

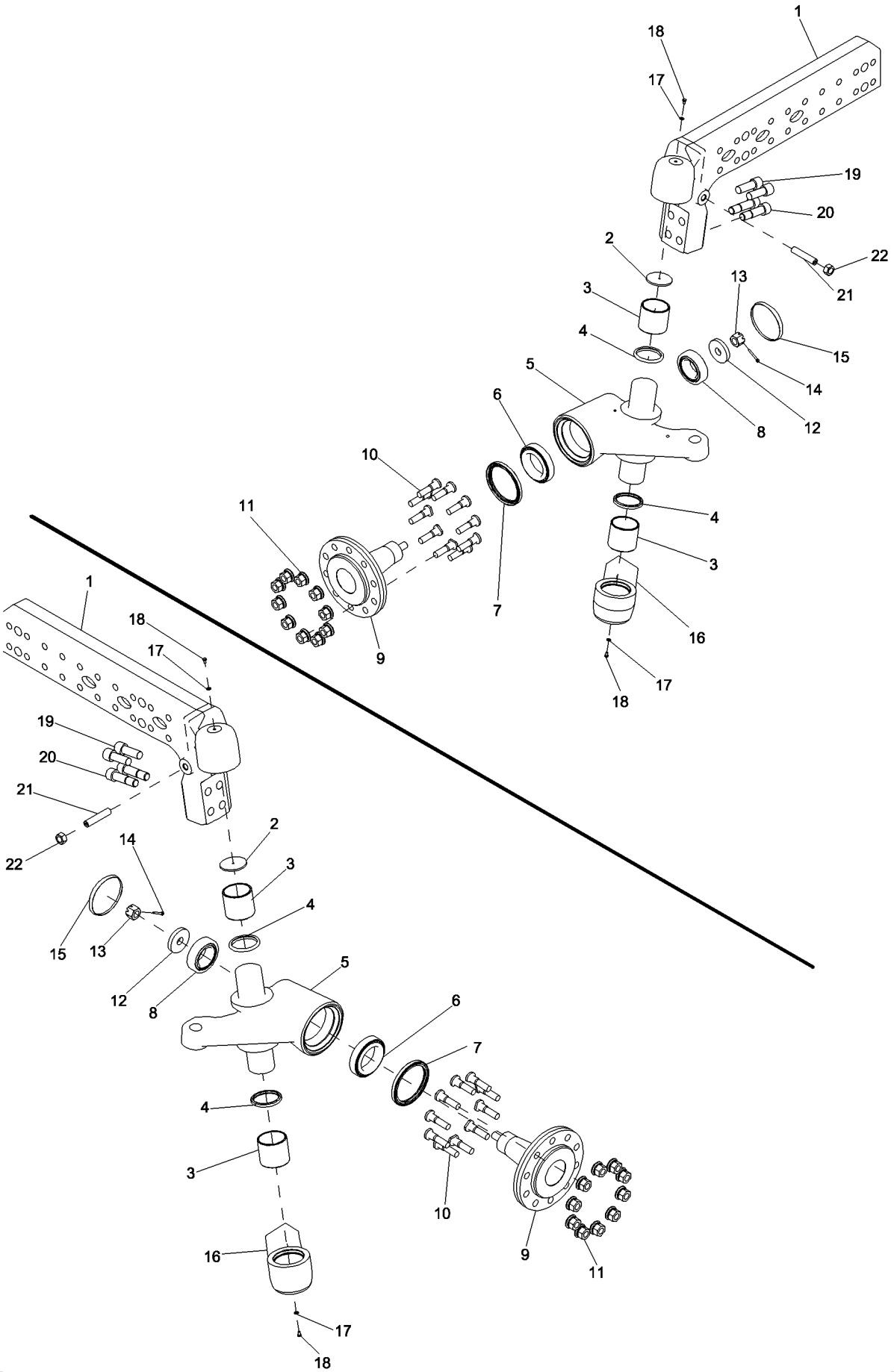

PDF created with pdfFactory trial version www.pdffactory.com

7088 AXIAL-FLOW COMBINE (EU) (4/08-)

05-07 EXTENSION, STEERING KNUCKLE AND HUB, REAR AXLE, NON - POWER GUIDE AXLE

ссылка	Номер детали	Кол-во	Описание
1	87702086	1	EXTENSION, Rear Axle, Right Hand
1	87702084	1	EXTENSION, Rear Axle, Left Hand
2	84074068	1	DISC,
3	84064163	2	BUSHING,
4	84069731	2	SEAL,
5	87660281	1	KNUCKLE JOINT, Steering, Right Hand
5	87660278	1	KNUCKLE JOINT, Steering, Left Hand
6	84068654	1	BEARING ASSY,
7	84454949	1	SEAL,
8	84068653	1	BEARING, ROLLER, TAPERED,
9	84448564	1	FLANGE,
10	84443588	10	WHEEL BOLT, M20 x 76, Cl 10.9,
11	84062511	10	WHEEL NUT, M20,
12	84064952	1	WASHER, M25 x 80 x 12,
13	309090	1	NUT, SLOTTED, M24 x 1.5, Cl 8,
14	130011	1	PIN, SPLIT (COTTER), M5 x 40,
15	84429450	1	COVER,
16	84446949	1	SUPPORT, Right Hand
16	84446948	1	SUPPORT, Left Hand
17	446307	2	SEALRING,
18	378056	2	BOLT, Hex, M6 x 10, 8.8, Full Thd,
19	84069505	2	BOLT, HS, Shoulder, M24 x 2 x 70, Cl 8.8,
20	87618988	2	SCREW,
21	87035487	1	SET SCREW, Hex Soc, M20 x 100, Flat Pt,
22	9847024	1	NUT, M20, Cl 10,

PDF created with pdfFactory trial version www.pdffactory.com

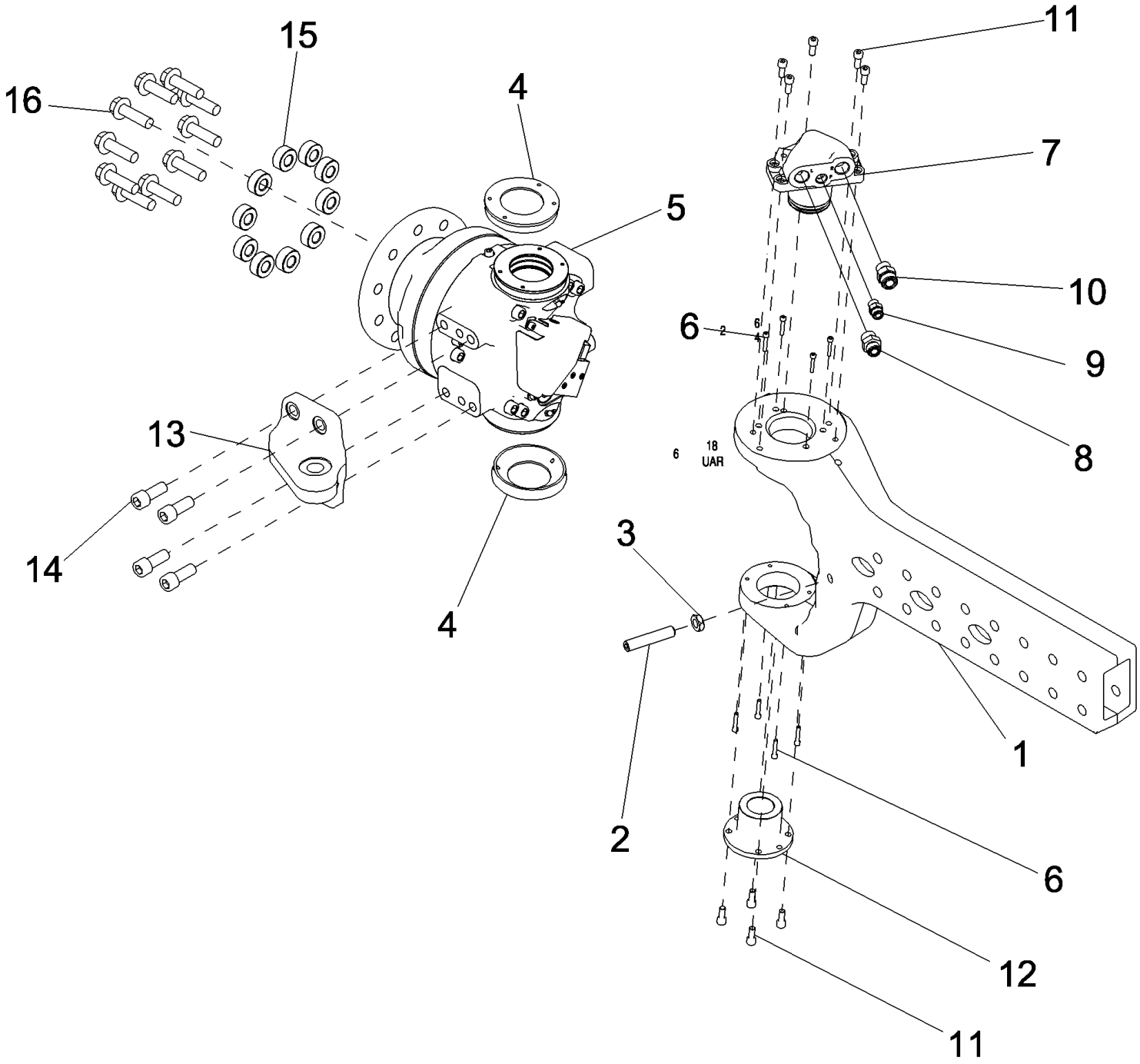

PDF created with pdfFactory trial version www.pdffactory.com

05-08 EXTENSION, STEERING KNUCKLE AND HUB, REAR AXLE, POWER GUIDE AXLE

ссылка	Номер детали	Кол-во	Описание
1	87743252	1	AXLE, Power Guide, Right Hand
1	87743249	1	AXLE, Power Guide, Left Hand
2	87035487	1	SET SCREW, Hex Soc, M20 x 100, Flat Pt,
3	829-4420	1	NUT, Thin, M20 x 2.5, Cl 05,
4	84817924	2	COVER,
5	87726688	1	MOTOR, HYDRAULIC, 1260 cc, See Figure 05-09
6	9515561	8	SCREW, Hex Soc Hd, M6 x 35, 12.9,
7	432698A1	1	GUIDE, Kingpin
8	83962539	1	CONNECTOR, HYD.,
9	9992305	1	CONNECTOR, HYD., 13/16"-16 ORFS x 3/4"-16 ORB,
10	9840535	1	CONNECTOR, HYD., 1 3/16"-12 ORFS x 1 1/16"-12 ORB,
11	86508097	9	SCREW, Hex Soc Hd, M10 x 25, 12.9,
12	84800194	1	PIN, Lower
13	87685406	1	ARM, STEERING, Power Guide Axle, Right Hand
13	87685408	1	ARM, STEERING, Power Guide Axle, Left Hand
14	87733367	4	SCREW,
15	87281709	10	SPACER, Wheel Bolt
16	87035472	10	BOLT, SPECIAL, Hex Flg, M20 x 1.5 x 70, Cl 10.9,

PDF created with pdfFactory trial version www.pdffactory.com

05-09 MOTOR, HYDRAULIC, 1260 CC, REAR POWER GUIDE AXLE

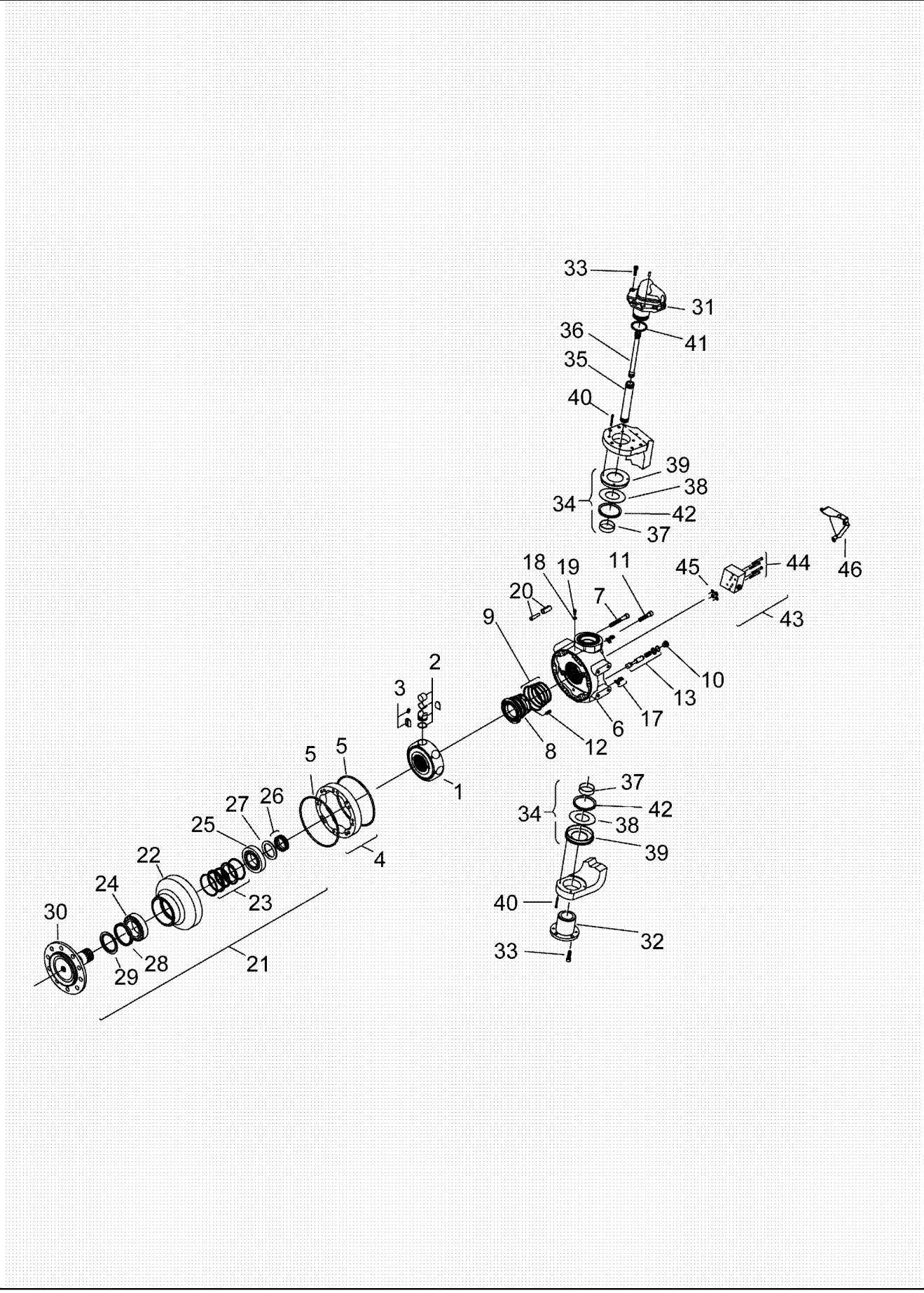

PDF created with pdfFactory trial version www.pdffactory.com

7088 AXIAL-FLOW COMBINE (EU) (4/08-)

05-09 MOTOR, HYDRAULIC, 1260 CC, REAR POWER GUIDE AXLE

ссылка	Номер детали	Кол-во	Описание
1	NSS	1	NOT SERVICED SEPARATELY, CYLINDER BLOCK ASSEMBLY
2	NSS	8	NOT SERVICED SEPARATELY, KIT, Piston
3	NSS	1	NOT SERVICED SEPARATELY, KIT, Piston Retainer
4	NSS	1	NOT SERVICED SEPARATELY, CAM RING, Inc. 5
5	87484762	2	O-RING, Cam Ring
6	NSS	1	NOT SERVICED SEPARATELY, COVER, Distributor
7	NSS	6	NOT SERVICED SEPARATELY, SCREW, Socket Head Cap
8	NSS	1	NOT SERVICED SEPARATELY, VALVE, Distributor
9	87484763	1	KIT, SEALS, Distributor Seal
10	NSS	1	NOT SERVICED SEPARATELY, PLUG, Hex Socket
11	NSS	4	NOT SERVICED SEPARATELY, SCREW, Socket Head Cap
12	NSS	9	NOT SERVICED SEPARATELY, SPRING
13	NSS	1	NOT SERVICED SEPARATELY, SPOOL
14	NSS	1	NOT SERVICED SEPARATELY, WASHER, (Not Shown)
15	NSS	1	NOT SERVICED SEPARATELY, RING, Snap, (Not Shown)
16	NSS	1	NOT SERVICED SEPARATELY, SPRING, (Not Shown)
17	NSS	2	NOT SERVICED SEPARATELY, ZERK, Grease
18	NSS	1	NOT SERVICED SEPARATELY, WASHER, Bleed Screw
19	NSS	1	NOT SERVICED SEPARATELY, SCREW, Socket Head Cap
20	NSS	2	NOT SERVICED SEPARATELY, PIN, Safety
21	NSS	1	NOT SERVICED SEPARATELY, BEARING SUPPORT ASSEMBLY, Inc. 22 - 30
22	NSS	1	NOT SERVICED SEPARATELY, BEARING SUPPORT
23	87485684	1	SEAL, Inner Shaft
24	87485685	1	BEARING, Outer
25	87485686	1	BEARING, Inner
26	NSS	1	NOT SERVICED SEPARATELY, RING, Split
27	NSS	1	NOT SERVICED SEPARATELY, SHIM
28	NSS	1	NOT SERVICED SEPARATELY, SEAL, Grease
29	NSS	1	NOT SERVICED SEPARATELY, DEFLECTOR
30	NSS	1	NOT SERVICED SEPARATELY, SHAFT
31	NSS	1	NOT SERVICED SEPARATELY, PIN, Top
32	NSS	1	NOT SERVICED SEPARATELY, PIN, Bottom
33	NSS	9	NOT SERVICED SEPARATELY, SCREW, Socket Head Cap
34	NSS	2	NOT SERVICED SEPARATELY, KIT, Pivot Seal, Inc. 37 - 39, 42
35	NSS	1	NOT SERVICED SEPARATELY, PIPE, Outer, With Seals
36	NSS	1	NOT SERVICED SEPARATELY, PIPE, Inner, With Seals
37	NSS	2	NOT SERVICED SEPARATELY, BUSHING
38	NSS	2	NOT SERVICED SEPARATELY, WASHER, Thrust
39	NSS	2	NOT SERVICED SEPARATELY, SEAL COVER, Protector
40	NSS	8	NOT SERVICED SEPARATELY, SCREW, Socket Head Cap
41	84817917	1	SEALRING, Top Pin

PDF created with pdfFactory trial version www.pdffactory.com

ссылка	Номер детали	Кол-во	Описание
42	84817926	2	SEALRING,
43	NSS	1	NOT SERVICED SEPARATELY, VALVE ASSEMBLY, Pilot, 1 Speed
44	NSS	4	NOT SERVICED SEPARATELY, SCREW, Socket Head Cap
45	NSS	4	NOT SERVICED SEPARATELY, O-RING
46	NSS	1	NOT SERVICED SEPARATELY, COVER, Pilot Valve
47	87360505	1	KIT, SEALS, Inc. 5, 9, 41
48	87552816	1	KIT, REPAIR, Front Side Motor, Inc. 23 - 25

PDF created with pdfFactory trial version www.pdffactory.com

05-10 TIE ROD ASSEMBLY, REAR AXLE

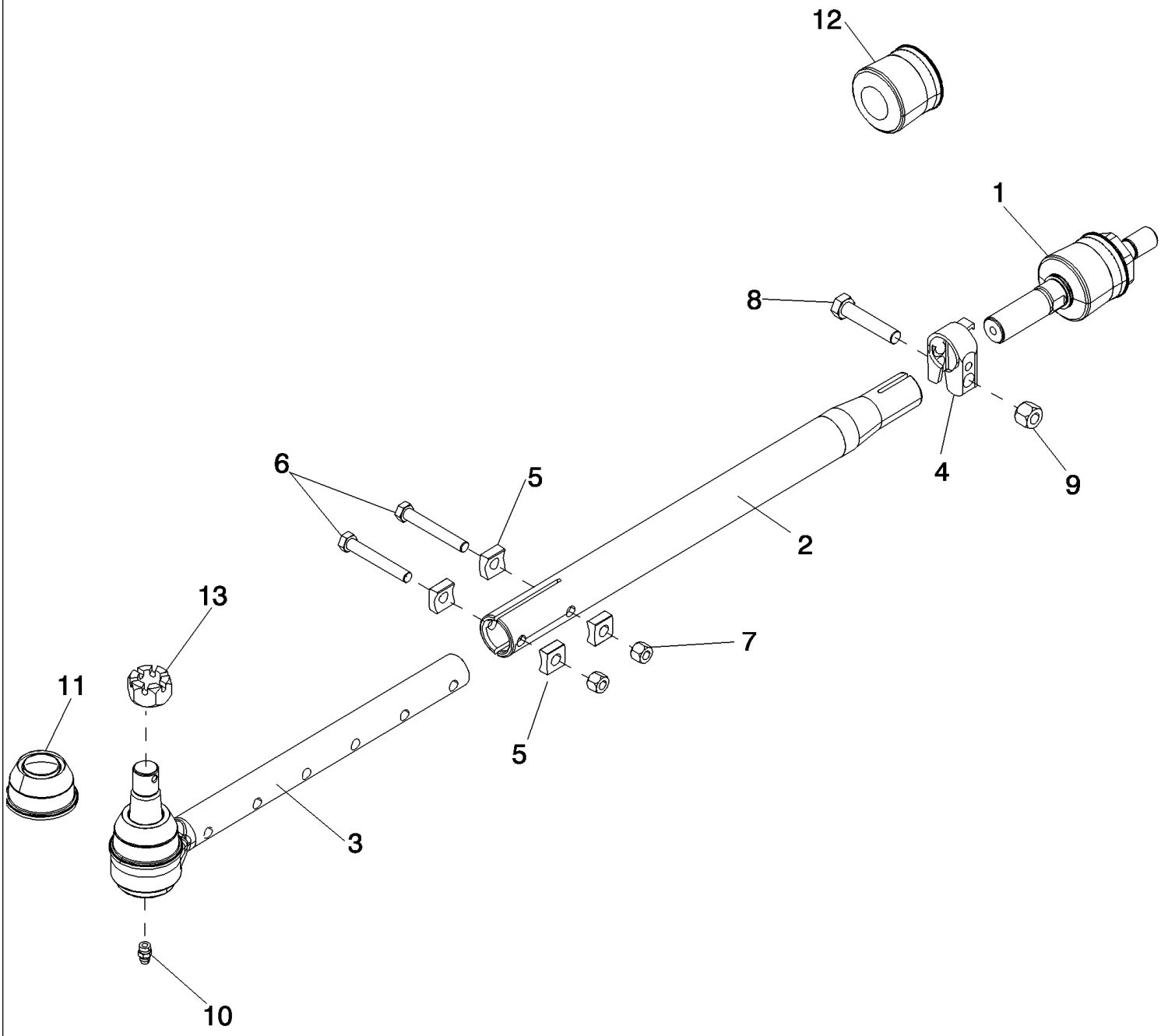

PDF created with pdfFactory trial version www.pdffactory.com

7088 AXIAL-FLOW COMBINE (EU) (4/08-)

05-10 TIE ROD ASSEMBLY, REAR AXLE

ссылка	Номер детали	Кол-во	Описание
1	87585370	1	In Line
2	87689379	1	TIE-ROD, Tube
2	87694591	1	TIE-ROD, Tube, 3.3 m
3	87694587	1	TIE-ROD, Vertical Socket
3	87689623	1	TIE-ROD, Vertical Socket, 3.3 m
4	87585377	1	CLAMP, Tie Rod
5	87754966	4	WASHER, Tie Rod
6	87495301	2	BOLT,
7	87333768	2	NUT,
8	326-1048	1	BOLT, Hex, 5/8"-11 x 3", G8,
9	231-41310	1	NUT, LOCK, 5/8"-11, GB,
10	219-8	1	NIPPLE, LUBE, 1/4"-28 NPT x .54" lg,
11	87585378	1	COVER, Vertical Socket
12	87585379	1	BOOT, In Line Socket Boot
13	425-1318	1	NUT, SLOTTED, 1 1/8"-12, G5,

PDF created with pdfFactory trial version www.pdffactory.com

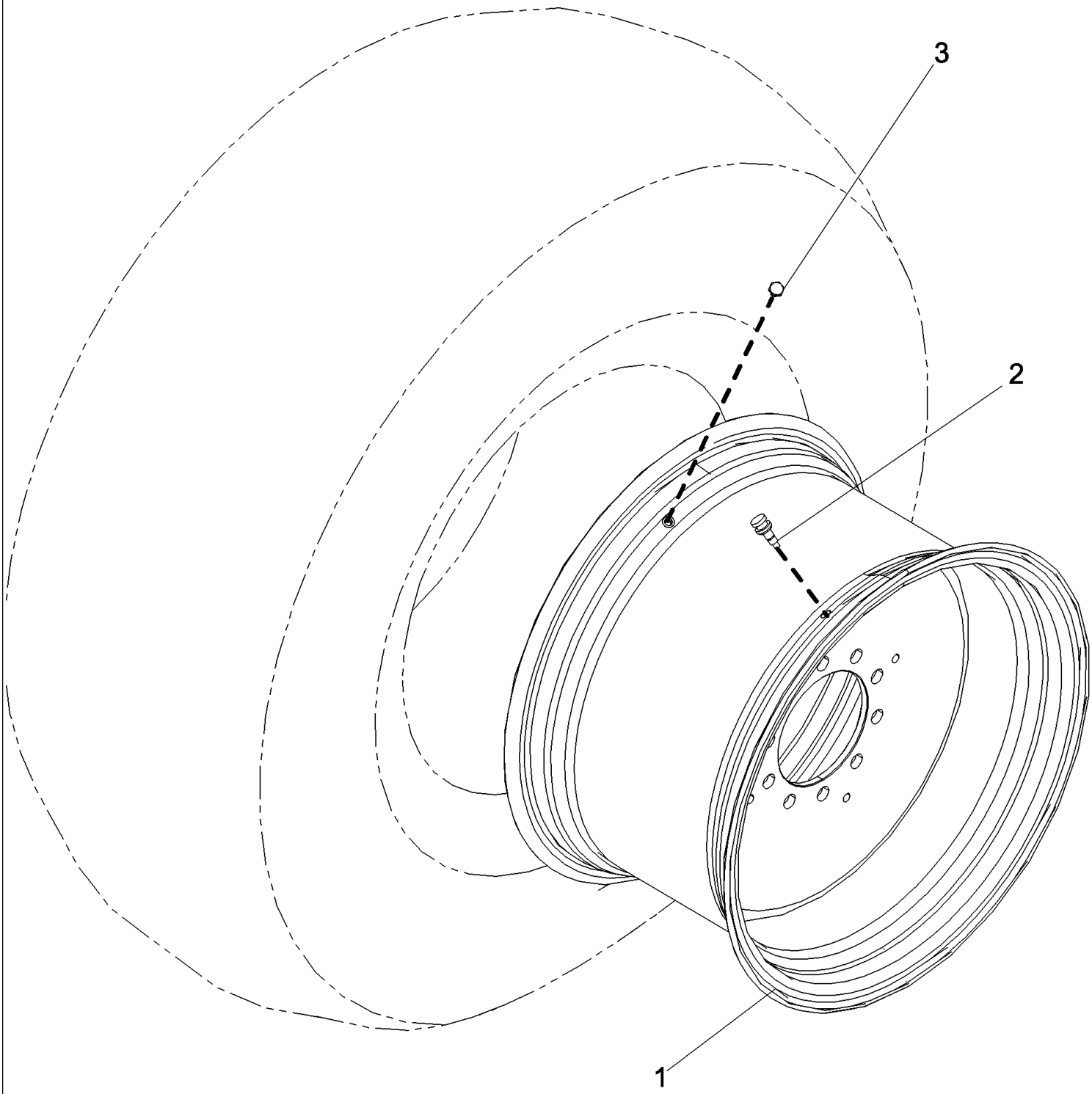

PDF created with pdfFactory trial version www.pdffactory.com

7088 AXIAL-FLOW COMBINE (EU) (4/08-)

05-11 WHEELS, STEERING

ссылка	Номер детали	Кол-во	Описание
1	86996753	2	WHEEL, 24 x W15L
1	86996745	2	WHEEL, 28 x W18L
1	86996737	2	WHEEL, 30 x DW15A
2	395448	2	VALVE STEM,
3	86997821	2	PLUG, Valve Hole

PDF created with pdfFactory trial version www.pdffactory.com

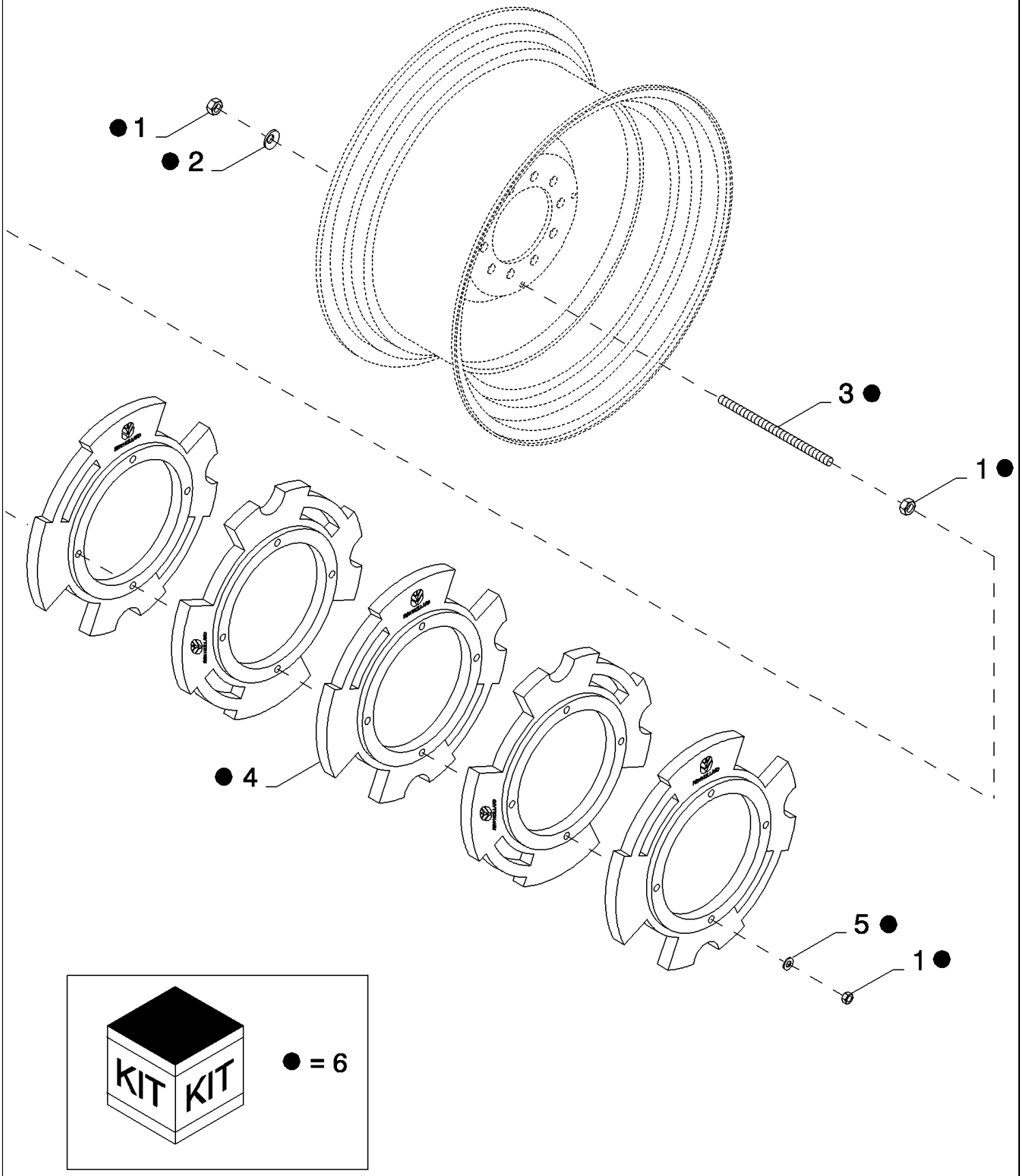

PDF created with pdfFactory trial version www.pdffactory.com

7088 AXIAL-FLOW COMBINE (EU) (4/08-)

05-12 COUNTERWEIGHTS, WHEELS, STEERING

ссылка	Номер детали	Кол-во	Описание
1	9706685	24	NUT, M12, Cl 8,
2	300913	8	WASHER, LOCK, M12.5,
3	84989794	8	ROD, THREADED, M12x220
3	84989795	8	ROD, THREADED, M12x383
3	84989796	8	ROD, THREADED, M12x528
4	84075681	AR	WEIGHT, COUNTER, 20KG
5	394630	8	WASHER, M13 x 28 x 4, HT,
6	84050431	1	DIA KIT, HARVESTER, Counterweight, 200 KG., Inc. 1-5
6	84050430	1	DIA KIT, HARVESTER, Counterweight, 400 KG., Inc. 1-5
6	84050432	1	DIA KIT, HARVESTER, Counterweight, 600 KG., Inc. 1-5

PDF created with pdfFactory trial version www.pdffactory.com

06-01 POWER TAKE OFF ASSEMBLY

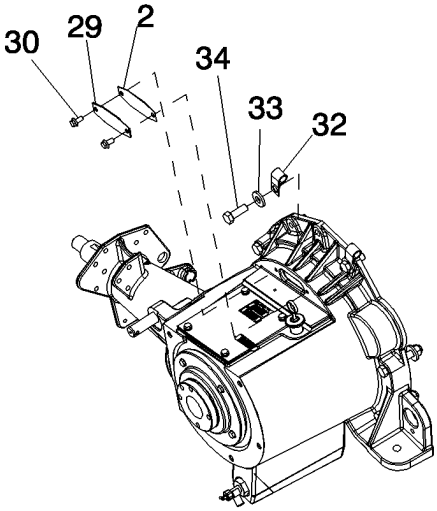

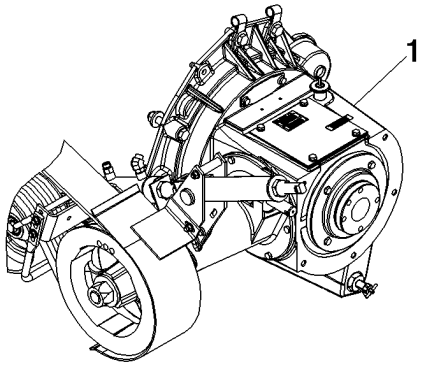

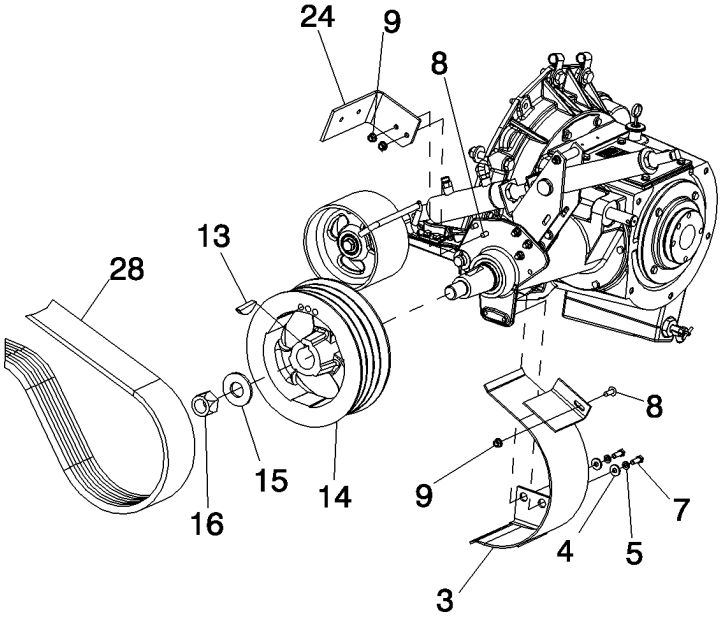

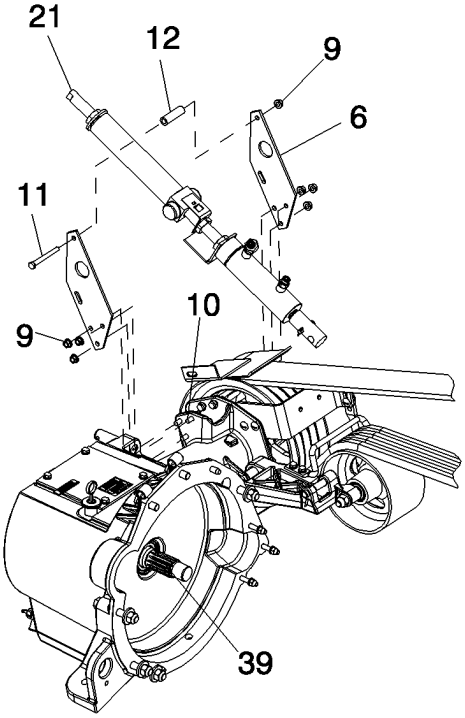

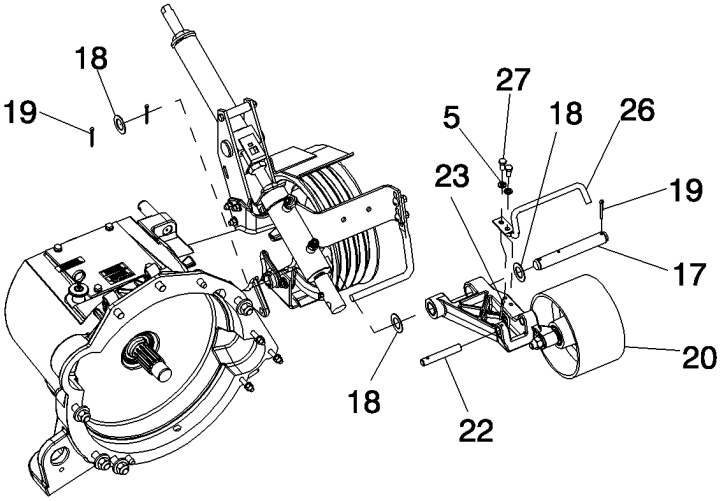

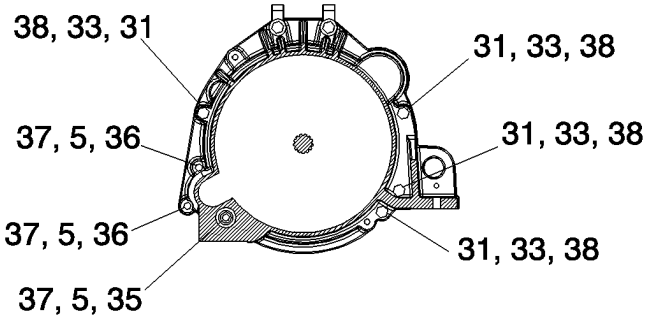

PDF created with pdfFactory trial version www.pdffactory.com

7088 AXIAL-FLOW COMBINE (EU) (4/08-)

06-01 POWER TAKE OFF ASSEMBLY

ссылка	Номер детали	Кол-во	Описание
1	87603645	1	GEARBOX, Power Take Off, See Figure 06-02
2	185057C2	1	GASKET, Bolt Hole Bar
3	84137825	1	BRACKET, Separator Drive
4	495-81135	2	WASHER, 13/32" x 1" x .120",
5	492-11038	7	WASHER, LOCK, 3/8",
6	84132116	2	SUPPORT, Cylinder Anchor
7	413-616	2	BOLT, Hex, 3/8"-16 x 1", G5, Full Thd,
8	477-73816	3	SCREW, Sltd Serr Truss Hd, 3/8" x 1",
9	231-5146	10	NUT, Flg, USR, 3/8"-16,
10	409-7620	6	BOLT, Hex Flg, 3/8"-16 x 1 1/4", Serr,
11	413-656	1	BOLT, Hex, 3/8"-16 x 3 1/2", G5,
12	196676C1	1	SPACER, Cylinder Anchor Bar
13	126-179	1	KEY, WOODRUFF, #V, 1/2" x 2 3/4", HT,
14	87516701	1	PULLEY, Separator Drive Clutched Belt
15	87584287	1	WASHER,
16	86609684	1	NUT, LOCK, 1 1/4"-7, GB,
17	362678A1	1	PIN, Idler Arm Pivot Clutched Belt
18	495-81073	3	WASHER, 1 1/32" x 1 3/4" x .060",
19	432-1224	3	PIN, SPLIT (COTTER), 3/16" x 1 1/2",
20	NSS	1	NOT SERVICED SEPARATELY, ARM ASSEMBLY, Separator Idler With Pully, See Figure 06-03
21	NSS	1	NOT SERVICED SEPARATELY, CYLINDER ASSEMBLY, Separator Belt Tensioning, See Figure 06-04
22	362679A1	1	PIN, Cylinder Rod End
23	432-1232	1	PIN, SPLIT (COTTER), 3/16" x 2",
24	84137779	1	BRACKET, Separator Belt Channel Support
26	87315336	1	GUIDE, Separator Belt
27	413-612	2	BOLT, Hex, 3/8"-16 x 3/4", G5, Full Thd,
28	84137716	1	BELT, Separator Drive
29	185056C1	1	COVER, Bar Bolt Hole
30	409-7612	2	BOLT, Hex Flg, 3/8"-16 x 3/4", Serr,
31	413-1064	4	BOLT, Hex, 5/8"-11 x 4", G5,
32	1345263C1	2	CLIP,
33	496-41066	6	WASHER, 21/32" x 1 1/2" x .188", HDN,
34	413-1028	2	BOLT, Hex, 5/8"-11 x 1 3/4", G5,
35	413-660	1	BOLT, Hex, 3/8"-16 x 3 3/4", G5,
36	413-652	2	BOLT, Hex, 3/8"-16 x 3 1/4", G5,
37	425-106	3	NUT, 3/8"-16, G5,
38	425-1010	4	NUT, 5/8"-11, G5,

PDF created with pdfFactory trial version www.pdffactory.com

06-02 GEAR BOX ASSEMBLY, POWER TAKE OFF

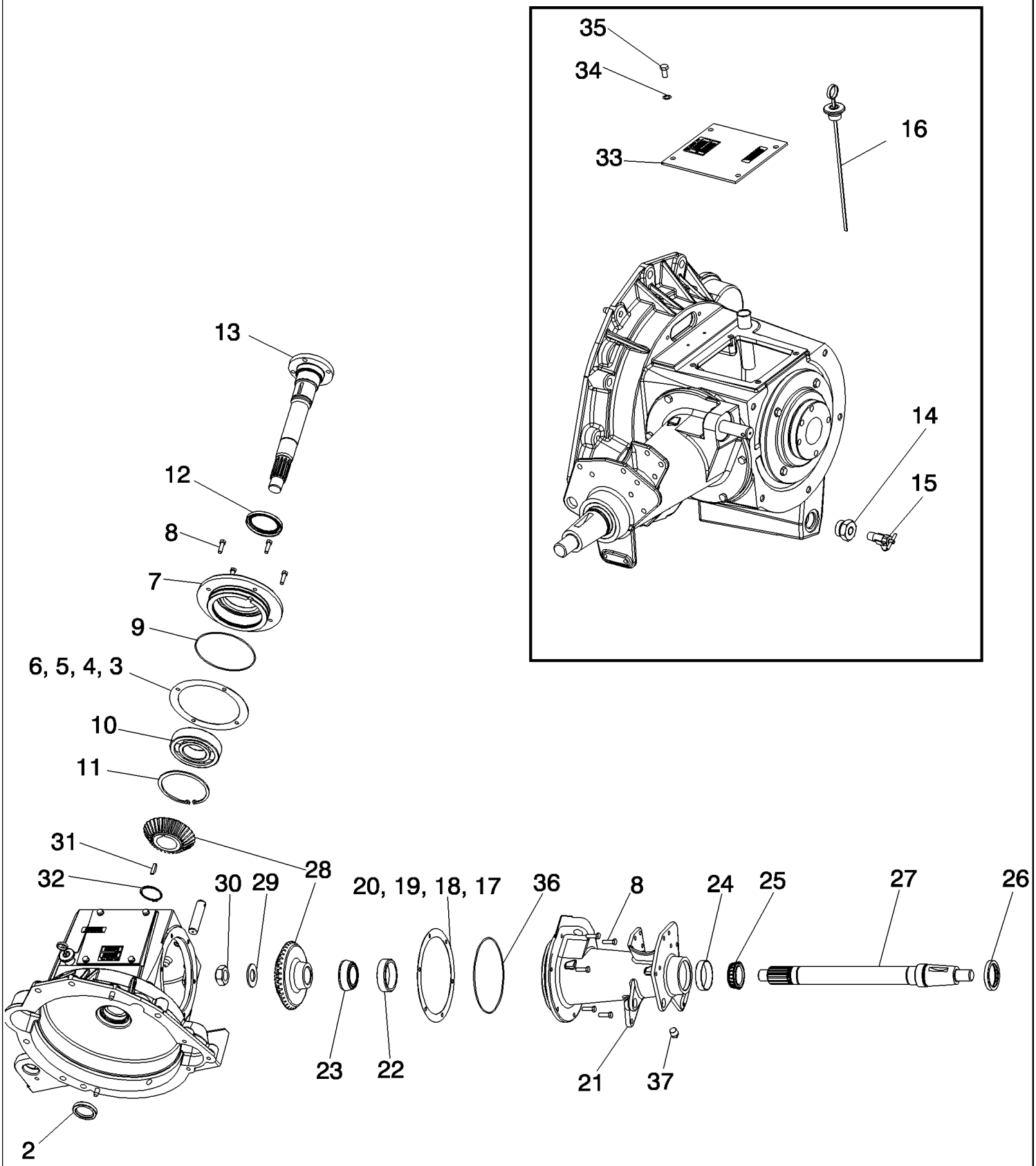

PDF created with pdfFactory trial version www.pdffactory.com

7088 AXIAL-FLOW COMBINE (EU) (4/08-)

06-02 GEAR BOX ASSEMBLY, POWER TAKE OFF

ссылка	Номер детали	Кол-во	Описание
1	87642675	1	HOUSING ASSY., Engine Power Take Off
2	173559C92	1	SEAL,
3	192806C1	AR	SHIM, 0.762 mm, Shaft Bearing Housing
4	192807C1	AR	SHIM, 0.250 mm, Shaft Bearing Housing
5	192808C1	AR	0.178 mm, Shaft Bearing Housing
6	192809C1	AR	0.127 mm, Shaft Bearing Housing
7	87525025	1	HOUSING, Drive Shaft Bearing
8	426-620	10	BOLT, Hex, 3/8"-16 x 1 1/4", G8, Full Thd,
9	238-6260	1	O-RING, -260, 90 Duro, 6.484" ID x .139" Thk,
10	87603651	1	BEARING ASSY,
11	800-21140	1	RING, SNAP, M140, Int,
12	87311003	1	SEAL,
13	87612411	1	SHAFT, Drive Input
14	280482A1	1	ADAPTER,
15	301803R1	1	VALVE, SHUT-OFF,
16	186019C91	1	DIPSTICK, Power Take Off Oil Level
17	191416C1	AR	SHIM/Retired, 0.005 mm, Separator Drive Housing
18	191417C1	AR	SHIM/Retired, 0.007 mm, Separator Drive Housing
19	191418C1	AR	SHIM/Retired, 0.010 mm, Separator Drive Housing
20	191419C1	AR	SHIM/Retired, 0.030 mm, Separator Drive Housing
21	364578A1	1	HOUSING, Separator Drive
22	A75210	1	BEARING, CUP,
23	A75211	1	BEARING, CONE,
24	376463C1	1	BEARING, ROLLER, TAPERED,
25	364463C91	1	BEARING, CONE,
26	194051C1	1	SEAL, Oil
27	87589086	1	SHAFT, Separator Drive
28	87310992	1	GEAR SET, Separator Drive
29	396-11131	1	WASHER, 1 5/16" x 2 1/2" x .150",
30	371747A1	1	NUT, LOCK,
31	126-176	1	KEY, WOODRUFF, #128, 5/16" x 2 1/8", HT,
32	87314980	1	SPACER,
33	192275C1	1	COVER, Housing
34	492-11038	4	WASHER, LOCK, 3/8",
35	413-612	4	BOLT, Hex, 3/8"-16 x 3/4", G5, Full Thd,
36	238-6266	1	O-RING, -266, 90 Duro, 7.984" ID x .139" Thk,
37	50057K	1	PLUG,
38	188196C1	1	KIT, SHIM, Inc. 3 - 6
39	188195C1	1	KIT, SHIM, Inc. 17 - 20
40	87616966	1	BEARING ASSY, Inc. 22, 23

PDF created with pdfFactory trial version www.pdffactory.com

06-03 ARM ASSEMBLY, SEPARATOR IDLER WITH PULLEY, POWER TAKE OFF

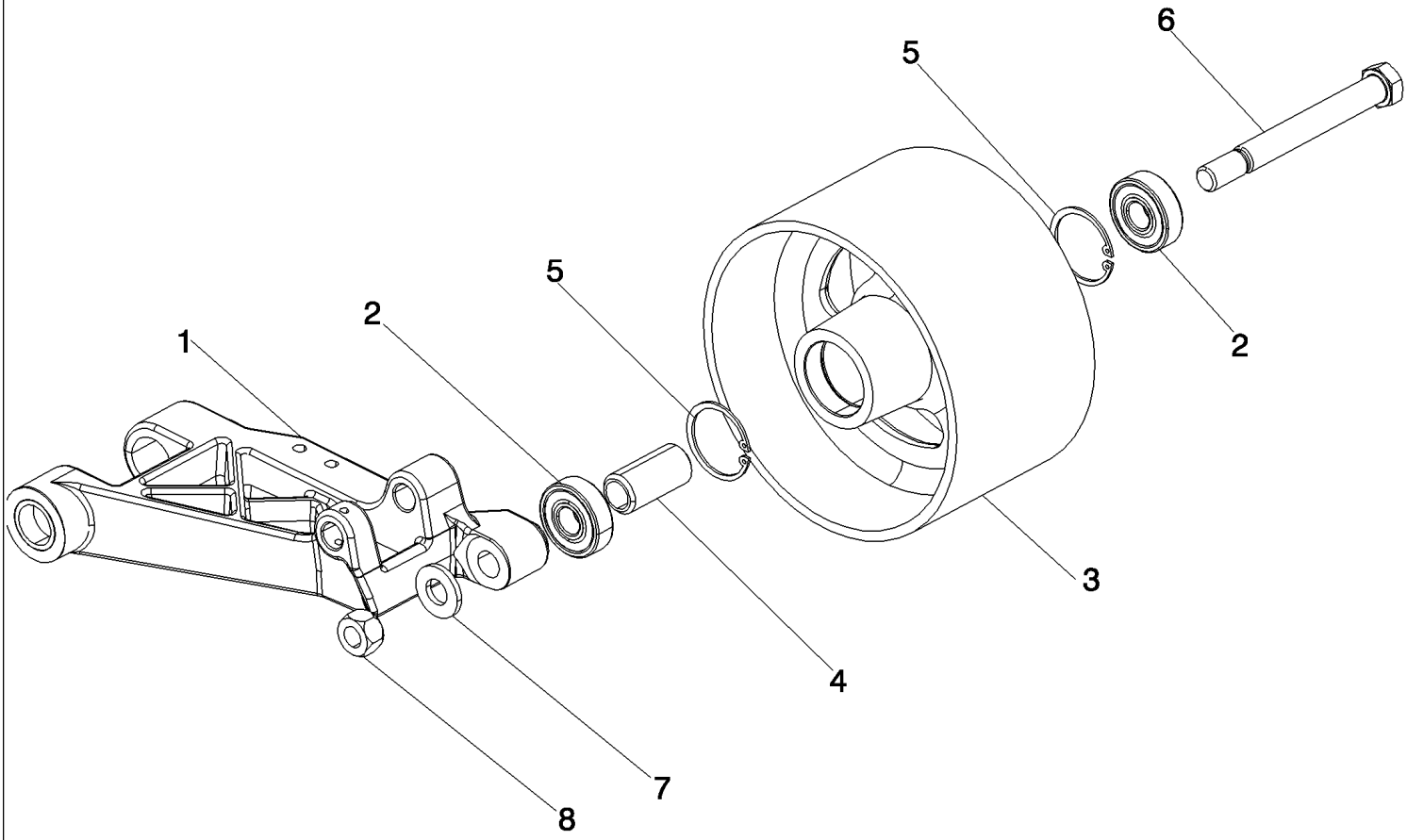

PDF created with pdfFactory trial version www.pdffactory.com

7088 AXIAL-FLOW COMBINE (EU) (4/08-)

06-03 ARM ASSEMBLY, SEPARATOR IDLER WITH PULLEY, POWER TAKE OFF

ссылка	Номер детали	Кол-во	Описание
1	87708450	1	ARM ASSY., Separator Drive Idler
2	87306803	2	BEARING, BALL, Separator Idler
3	87516707	1	PULLEY, Separator Idler
4	87310758	1	BUSHING, Idler Bearing Separator Drive
5	800-2147	2	RING, SNAP, M47, Int,
6	87708446	1	BOLT, Idler Pulley Separator Drive
7	86624189	1	WASHER, 21/32" x 1 5/16" x .150",
8	125-10012	1	NUT, 5/8"-11, G5, LH,

PDF created with pdfFactory trial version www.pdffactory.com

06-04 CYLINDER ASSEMBLY, SEPARATOR BELT TENSIONING, POWER TAKE OFF

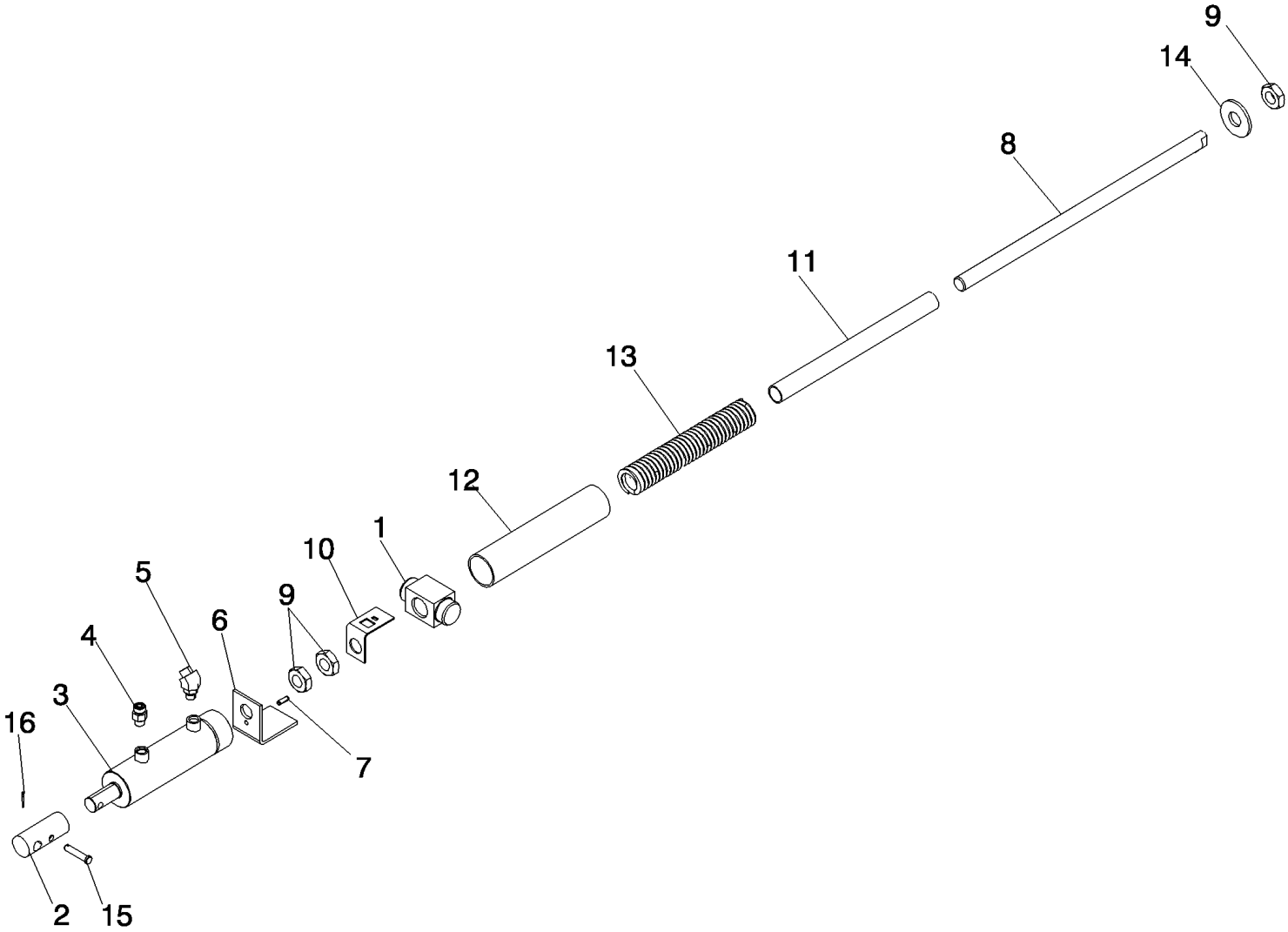

PDF created with pdfFactory trial version www.pdffactory.com

7088 AXIAL-FLOW COMBINE (EU) (4/08-)

06-04 CYLINDER ASSEMBLY, SEPARATOR BELT TENSIONING, POWER TAKE OFF

ссылка	Номер детали	Кол-во	Описание
1	84132117	1	PIVOT, Separator Drive Arm
2	87522209	1	SLEEVE, Separator Clutch Cylinder Extension
3	87742000	1	CYLINDER ASSY., Separator Clutch
4	134713A1	1	VALVE, CHECK,
5	201-315	1	ELBOW, 45є, 11/16"-16 x 9/16"-18. Adj, ORFS,
6	84132119	1	GUIDE, Separator Drive Tightener Rod
7	38-11612	1	PIN, LOCK, 1/4" x 3/4", Slotted,
8	87744062	1	ROD, Separator Belt Tensioning
9	87034489	3	NUT,
10	84141913	1	GUIDE, Separator Belt Tension
11	84141905	1	TUBE, Separator Drive Tightener Clutch Belt
12	84141648	1	TUBE, Separator Belt Tensioning
13	87744068	1	SPRING, COIL, Separator Belt Tension
14	87752070	1	WASHER,
15	427-6178	1	PIN, CLEVIS, 3/8" x 1.781",
16	432-612	1	PIN, SPLIT (COTTER), 3/32" x 3/4",

PDF created with pdfFactory trial version www.pdffactory.com

06-05 HYDROSTATICS - PUMP - SINGLE SPEED GROUND DRIVE

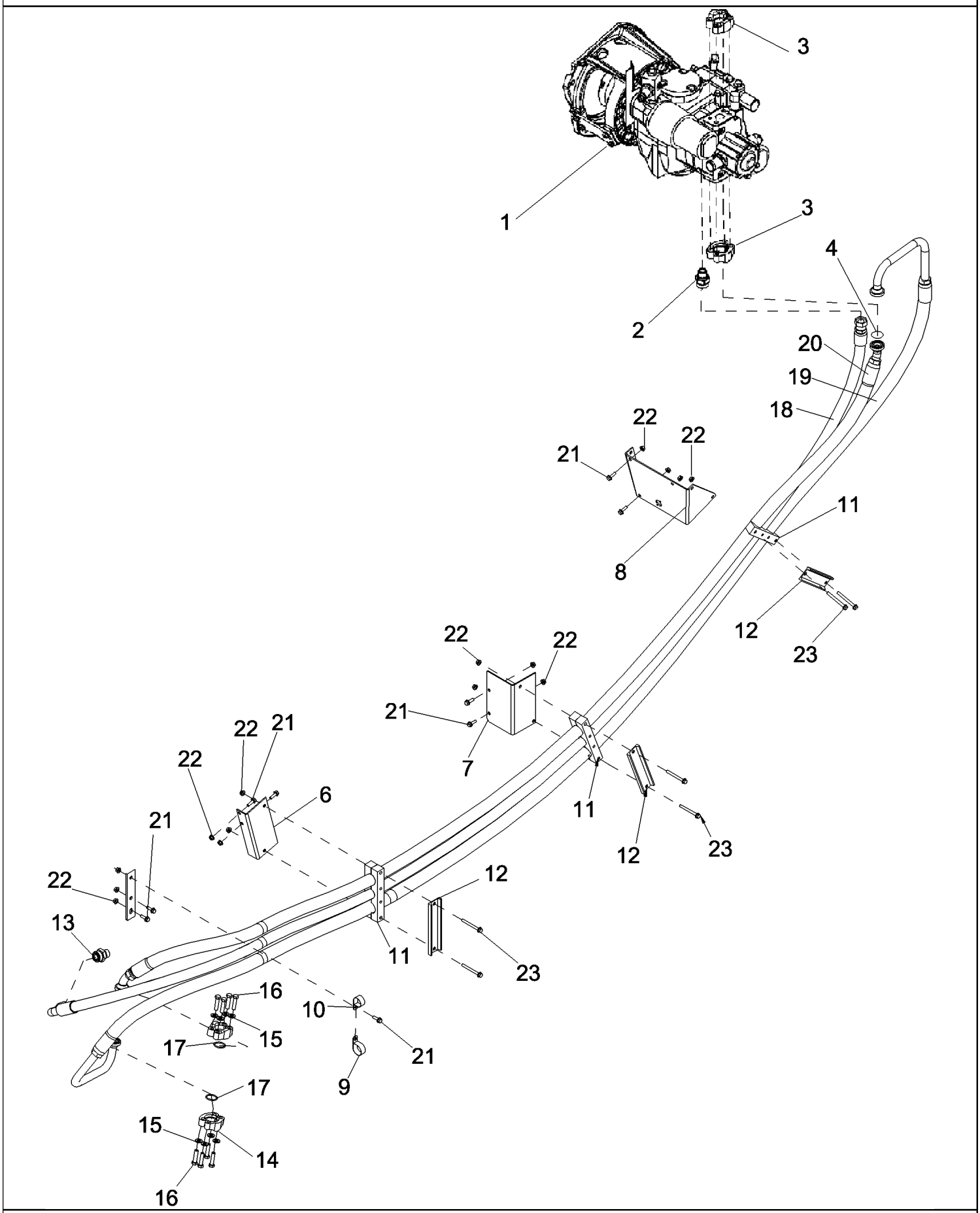

PDF created with pdfFactory trial version www.pdffactory.com

ссылка	Номер детали	Кол-во	Описание
1	REF	1	INSTRUCTION, PUMP, Hydrostatic - Mounting, See Figure 06-07
2	201-130	1	CONNECTOR, HYD., 1 7/16"-12 ORFS x 1 1/16"-12 ORB,
3	S97224	4	CLAMP,
4	238-6219	2	O-RING, -219, 90 Duro, 1.296" ID x .139" Thk,
5	427273A1	1	SUPPORT, Hose Clamp
6	224301A2	1	SUPPORT, Clamp, Front
7	224302A2	1	SUPPORT, Clamp, Middle
8	87609162	1	BRACKET,
9	515-23381	1	CLAMP, 1 1/2", Insul, 3/8" Bolt,
10	515-23333	1	CLAMP, 1 5/16", Insul, 3/8" Bolt,
11	221145A1	3	CLAMP, Hose
12	224303A1	3	GUIDE, Clamp Back-Up
13	201-130	1	CONNECTOR, HYD., 1 7/16"-12 ORFS x 1 1/16"-12 ORB,
14	S97224	4	CLAMP,
15	87019792	8	WASHER,
16	280747	8	BOLT, Hex, 7/16"-14 x 1 3/4", G5,
17	238-6219	2	O-RING, -219, 90 Duro, 1.296" ID x .139" Thk,
18	87597388	1	HOSE ASSY., Drain - Hydrostatic Motor
19	87388139	1	HOSE ASSY., Reverse Hydrostatic
20	87388138	1	HOSE ASSY., Forward Hydrostatic
21	87698833	9	BOLT,
22	86507066	15	NUT, M8 x 1.25, Flg, Cl 10,
23	87695420	6	BOLT,

PDF created with pdfFactory trial version www.pdffactory.com

06-06 HYDROSTATICS - PUMP - TWO SPEED GROUND DRIVE

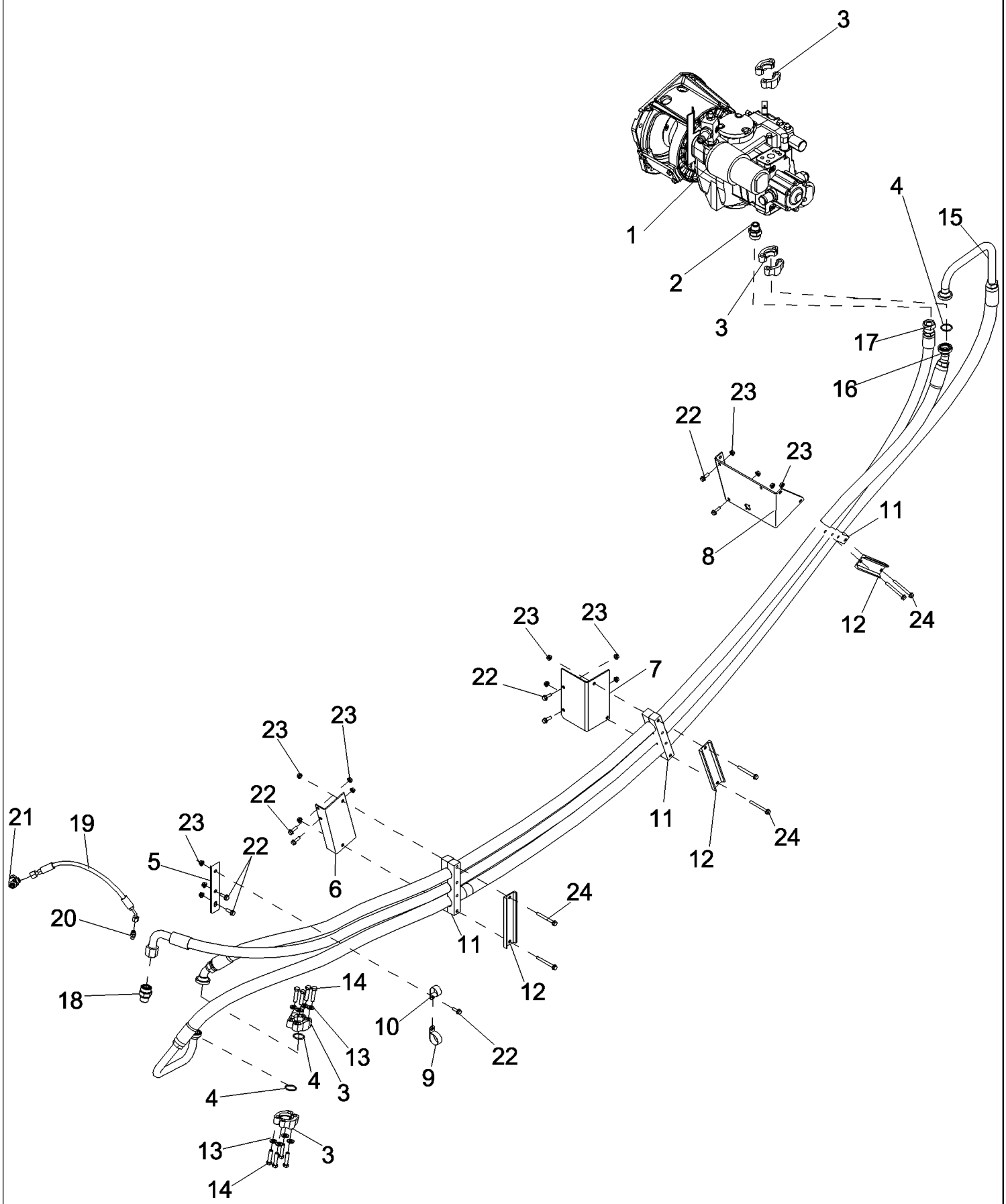

PDF created with pdfFactory trial version www.pdffactory.com

ссылка	Номер детали	Кол-во	Описание
2	201-130	1	CONNECTOR, HYD., 1 7/16"-12 ORFS x 1 1/16"-12 ORB,
3	S97224	8	CLAMP,
4	238-6219	4	O-RING, -219, 90 Duro, 1.296" ID x .139" Thk,
5	427273A1	1	SUPPORT, Hose Clamp
6	87727974	1	BRACKET, Clamp, Front
7	87727971	1	BRACKET, Clamp, Middle
8	87609162	1	BRACKET,
9	515-23381	1	CLAMP, 1 1/2", Insul, 3/8" Bolt,
10	515-23333	1	CLAMP, 1 5/16", Insul, 3/8" Bolt,
11	221145A1	3	CLAMP, Hose
12	87727969	3	BRACKET, Clamp Back-Up
13	87019792	8	WASHER,
14	280747	8	BOLT, Hex, 7/16"-14 x 1 3/4", G5,
15	87388139	1	HOSE ASSY., Reverse Hydrostatic
16	87388138	1	HOSE ASSY., Forward Hydrostatic
17	87388142	1	HOSE ASSY., Drain Hydrostatic
18	201-130	1	CONNECTOR, HYD., 1 7/16"-12 ORFS x 1 1/16"-12 ORB,
19	87396619	1	HOSE ASSY., Two Speed
20	201-100	1	CONNECTOR, HYD., 9/16"-18 ORFS x 7/16"-20 ORB,
21	201-422	1	TEE, 11/16"-16 ORFS x 11/16"-16 Fem Sw Run,
22	87698833	9	BOLT,
23	86507066	15	NUT, M8 x 1.25, Flg, Cl 10,
24	87695420	6	BOLT,

PDF created with pdfFactory trial version www.pdffactory.com

06-07 PUMP ASSEMBLY, HYDROSTATIC - MOUNTING (125 CC/REV)

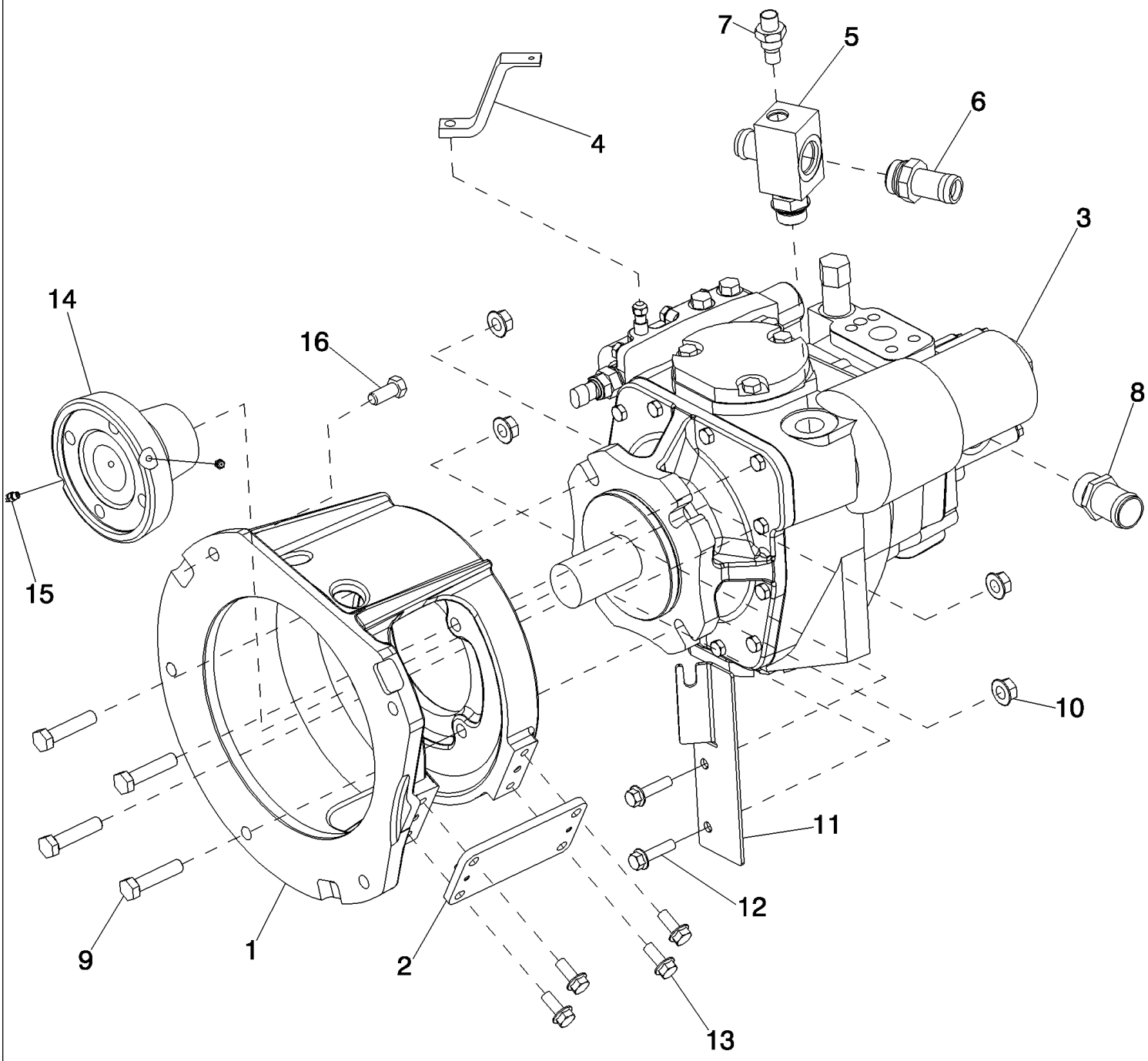

PDF created with pdfFactory trial version www.pdffactory.com

7088 AXIAL-FLOW COMBINE (EU) (4/08-)

06-07 PUMP ASSEMBLY, HYDROSTATIC - MOUNTING (125 CC/REV)

ссылка	Номер детали	Кол-во	Описание
1	87626988	1	HOUSING, Hydrostatic Pump
2	87584790	1	SUPPORT ASSY., Pump Housing
3	REF	1	INSTRUCTION, PUMP, Hydrostatic (125 cc/rev), See Figure 06-08
4	184433A1	1	LEVER, Pump Control
5	123521A2	1	TEE, Case Drain
6	123487A1	1	VALVE, Cooler Bypass
7	177678A1	1	SWITCH, Temperature
8	217-184	1	FITTING, 1 1/4" Hose X 1 5/16"-12 ORB, Beaded,
9	413-836	4	BOLT, Hex, 1/2"-13 x 2 1/4", G5,
10	86544265	4	NUT, Flg, 1/2"-13, G8,
11	87392144	1	BRACKET, Hydrostatic Control Cable
12	86523775	2	BOLT, Hex Flg, 3/8"-16 x 1 1/2", G5,
13	87698836	4	BOLT,
14	87545084	1	HOUSING, Auxiliary Belt Drive, 27T
15	219-87	2	NIPPLE, LUBE, 1/4"-28 x .56" lg, Self-Tap,
16	413-820	3	BOLT, Hex, 1/2"-13 x 1 1/4", G5, Full Thd,

PDF created with pdfFactory trial version www.pdffactory.com

ART NOT AVAILABLE

PDF created with pdfFactory trial version www.pdffactory.com

7088 AXIAL-FLOW COMBINE (EU) (4/08-)

06-08 PUMP ASSEMBLY, HYDROSTATIC (125 CC/REV)

ссылка	Номер детали	Кол-во	Описание
	87648799	1	PUMP, HYDROSTATIC, 125 cc/rev, Inc. 1 - 63
	87648799R	1	REMAN-HYDRAUL PUMP,
	87648799C	1	CORE-HYDRAULIC PUMP,
	178310A1	1	PACKAGE, SEALS, Rotary Front, Inc. 1 - 3
1	100-21400	1	RING, SNAP, 4.00", Int, #400,
2	238-5239	1	O-RING, -239, 70 Duro, 3.609" ID x .139" Thk,
3	238-7138	1	O-RING, -138, Cl 7, 2.112" ID x .103" Thk,
4	87637839	1	SEAL, Dust
5	87699759	1	SHAFT, Input
6	529208R1	1	BEARING, CONE,
7	671032R1	1	BEARING, CONE,
8	671033R1	1	BEARING SET,
	107585A1	1	KIT, SHIM, Inc. 9
9	NSS	1	NOT SERVICED SEPARATELY, SHIM, .003
9	NSS	1	NOT SERVICED SEPARATELY, SHIM, .005
9	NSS	1	NOT SERVICED SEPARATELY, SHIM, .010
9	NSS	1	NOT SERVICED SEPARATELY, SHIM, .015
9	NSS	1	NOT SERVICED SEPARATELY, SHIM, .020
9	NSS	1	NOT SERVICED SEPARATELY, SHIM, .030
10	107592A1	1	WASHER,
11	133756C1	1	GASKET, Control Valve
12	413-528	2	BOLT, Hex, 5/16"-18 x 1 3/4", G5,
13	413-516	4	BOLT, Hex, 5/16"-18 x 1", G5, Full Thd,
	107593A2	1	PUMP, Kit, Charge, Inc. 14 - 18 and Kit 255081A1
14	37-1510	2	DOWEL, 5/16" x 5/8",
15	1986741C1	1	VALVE, PRESSURE RELIEF,
16	413-536	2	BOLT, Hex, 5/16"-18 x 2 1/4", G5,
17	326-564	4	BOLT, Hex, 5/16"-18 x 4", G8,
18	218-5157	1	PLUG, Hex Hd, 7/8"-14 ORB,
	255081A1	1	KIT, SEALS, Charge Pump, Inc. 19 - 22
19	133760C2	1	GASKET, Charge Pump
20	237-6014	1	O-RING, 14-1, 90 Duro, 1.048" ID x .118" Thk,
21	238-6117	1	O-RING, -117, 90 Duro, .799" ID x .103" Thk,
22	237-6010	1	O-RING, 10-1, 90 Duro, .755" ID x .097" Thk,
23	87699760	1	GASKET, Charge Pump
24	140769C1	2	VALVE, CHECK, Inc. 25, 26
25	238-6113	1	O-RING, -113, 90 Duro, .549" ID x .103" Thk,
26	140770C1	1	RING,
27	326-564	4	BOLT, Hex, 5/16"-18 x 4", G8,
	1986739C1	1	KIT, REPAIR, Internal Pressure Override, Inc. 28 - 31 and Kit 235419A1
28	237-6010	1	O-RING, 10-1, 90 Duro, .755" ID x .097" Thk,

PDF created with pdfFactory trial version www.pdffactory.com

ссылка	Номер детали	Кол-во	Описание
29	218-5151	1	PLUG, Hex Hd, 5/16"-24 ORB,
30	237-6002	1	O-RING, 2-1, .239" ID x .064" Thk,
31	238-6014	1	O-RING, -014, 90 Duro, .489" ID x .070" Thk,
	235419A1	1	KIT, SHIM, Inc. 32
32	NSS	1	NOT SERVICED SEPARATELY, SHIM, .002
32	NSS	1	NOT SERVICED SEPARATELY, SHIM, .005
32	NSS	1	NOT SERVICED SEPARATELY, SHIM, .010
32	NSS	1	NOT SERVICED SEPARATELY, SHIM, .031
32	NSS	1	NOT SERVICED SEPARATELY, SHIM, .062
32	NSS	1	NOT SERVICED SEPARATELY, SHIM, .100
	107591A1	1	KIT, SHIM, Inc. 33
33	NSS	6	NOT SERVICED SEPARATELY, SHIM, .002
33	NSS	4	NOT SERVICED SEPARATELY, SHIM, .005
33	NSS	4	NOT SERVICED SEPARATELY, SHIM, .010
33	NSS	4	NOT SERVICED SEPARATELY, SHIM, .015
33	NSS	4	NOT SERVICED SEPARATELY, SHIM, .025
34	238-5234	2	O-RING, -234, 70 Duro, 2.984" ID x .139" Thk,
35	413-716	6	BOLT, Hex, 7/16"-14 x 1", G5, Full Thd,
36	142408C1	2	RETAINER,
37	461-3086	6	SCREW, Hex Soc Hd, #8-32 x 3/8",
38	107581A1	2	PISTON, Servo, Inc. 39
39	100-1175	1	RING, SNAP, #75, Ext,
40	114324A1	1	LINK, Control
41	107583A1	1	HOUSING, Inc. 42 - 45
42	114324A1	1	LINK, Control
43	100-1125	2	RING, SNAP, #25, Ext,
44	140765C1	1	PIN, Control Valve
45	376463C1	2	BEARING, ROLLER, TAPERED,
46	107582A1	1	PLATE, LARGE,
47	533729R91	2	BEARING,
48	107588A1	1	PACKAGE, Rotating, Inc. 49
49	37-1510	1	DOWEL, 5/16" x 5/8",
50	142407C2	2	KIT, Servo Sleeve, Inc. 51, 52
51	238-5234	1	O-RING, -234, 70 Duro, 2.984" ID x .139" Thk,
52	238-5237	1	O-RING, -237, 70 Duro, 3.359" ID x .139" Thk,
53	107587A1	1	PLATE, LARGE, Valve
54	107584A1	1	GASKET, End Cover
55	107589A1	1	GASKET, Mounting Flange
56	37-1510	7	DOWEL, 5/16" x 5/8",
57	100-1175	4	RING, SNAP, #75, Ext,
58	9672438	1	PLUG, Hex Hd, 7/16"-20 ORB,

PDF created with pdfFactory trial version www.pdffactory.com

06-08 PUMP ASSEMBLY, HYDROSTATIC (125 CC/REV)

ссылка	Номер детали	Кол-во	Описание
59	76349	2	PLUG, Hex Hd, 9/16"-18 ORB, Incl. 60, 61
60	9617873	1	O-RING, 6-1, 90 Duro, .468" ID x .078" Thk,
61	9617873	1	O-RING, 6-1, 90 Duro, .468" ID x .078" Thk,
62	86512512	1	PLUG, Hex Hd, 7/8"-14 ORB, Incl. 63
63	167269	1	O-RING, 10-1, 90 Duro, .755" ID x .097" Thk,

PDF created with pdfFactory trial version www.pdffactory.com

06-09 MOTOR ASSEMBLY, FIXED HYDROSTATIC, SINGLE SPEED, 105.4 CC/REV

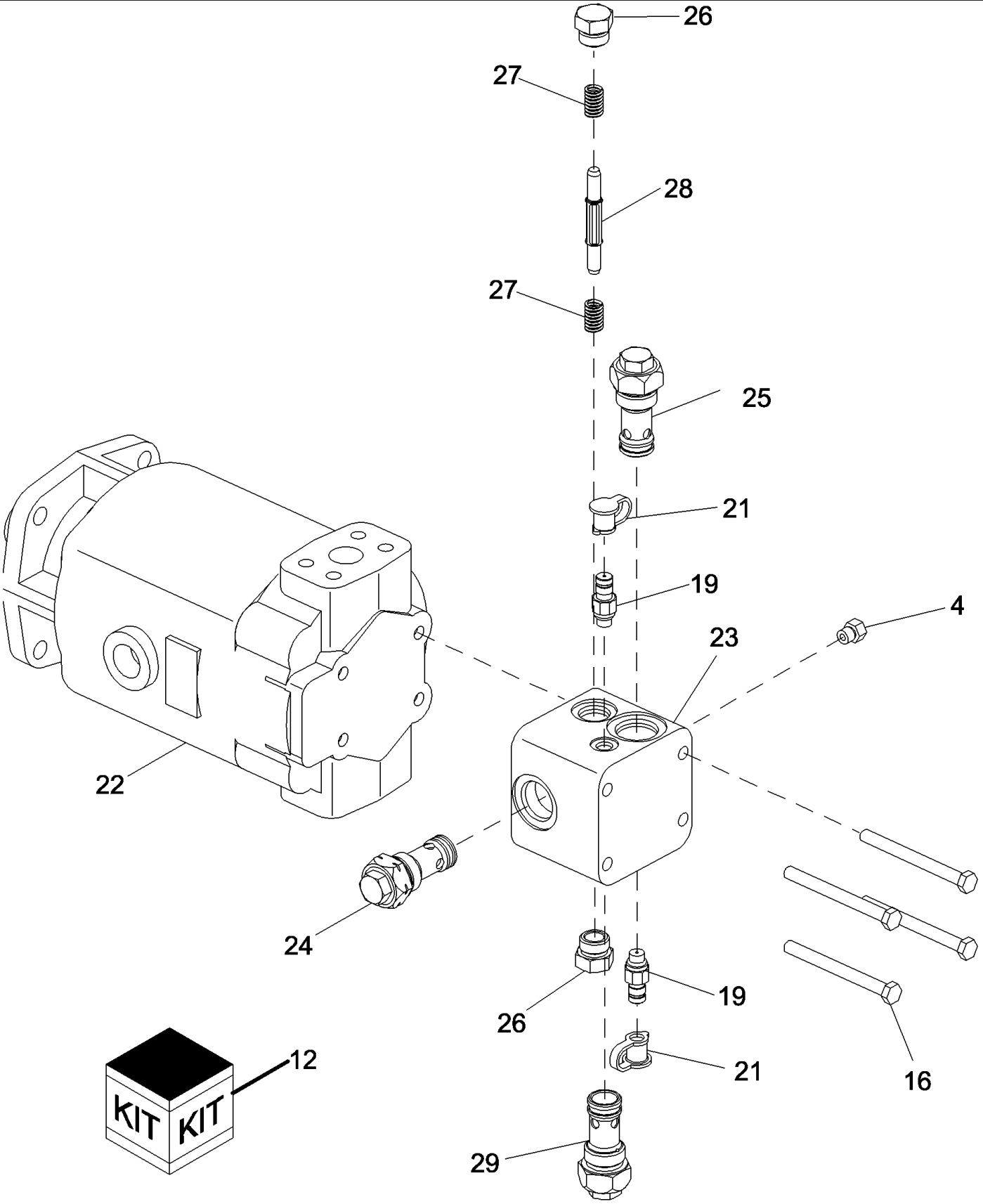

RI08C123

PDF created with pdfFactory trial version www.pdffactory.com

7088 AXIAL-FLOW COMBINE (EU) (4/08-)

06-09 MOTOR ASSEMBLY, FIXED HYDROSTATIC, SINGLE SPEED, 105.4 CC/REV

ссылка	Номер детали	Кол-во	Описание
	87374885	1	MOTOR, HYDROSTATIC, Fixed, Single Speed, 105.4 CC/REV
	87477581	1	REMAN-MOTOR HYDRAUL,
	87477577	1	CORE-MOTOR HYDRAULIC,
1	403145A1	1	SEAL, Shaft, (Not Shown)
2	100-21250	1	RING, SNAP, 2.50", Int, #250, (Not Shown)
3	37-1516	1	DOWEL, 5/16" x 1", (Not Shown)
4	217-430	1	PLUG, Hex Soc, 1/8"-27,
5	37-1510	5	DOWEL, 5/16" x 5/8", (Not Shown)
6	163410	1	PLUG, Hex Hd, 1 1/16"-12 ORB, (Not Shown)
7	403147A1	1	SHAFT, (Not Shown)
8	ST863	1	BEARING, CUP, (Not Shown)
9	1980140C1	1	GASKET, (Not Shown)
10	400983R91	1	BEARING, CONE, (Not Shown)
11	530741R1	1	BEARING, CUP, (Not Shown)
12	142398C91	1	KIT, SHIM, Inc. 13
13	NSS	1	NOT SERVICED SEPARATELY, Shim, 0.003 mm, (Not Shown)
13	NSS	1	NOT SERVICED SEPARATELY, Shim, 0.005 mm, (Not Shown)
13	NSS	1	NOT SERVICED SEPARATELY, Shim, 0.010 mm, (Not Shown)
13	NSS	1	NOT SERVICED SEPARATELY, Shim, 0.015 mm, (Not Shown)
13	NSS	1	NOT SERVICED SEPARATELY, Shim, 0.020 mm, (Not Shown)
13	NSS	1	NOT SERVICED SEPARATELY, Shim, 0.030 mm, (Not Shown)
14	326-748	6	BOLT, Hex, 7/16"-14 x 3", G8, (Not Shown)
15	326-732	2	BOLT, Hex, 7/16"-14 x 2", G8, (Not Shown)
16	413-664	4	BOLT, Hex, 3/8"-16 x 4", G5,
17	81986	2	SCREW, Hex Soc Hd, 5/16"-18 x 3", (Not Shown)
18	92734C1	2	WASHER, (Not Shown)
19	R55912	2	COUPLING,
20	237-6004	2	O-RING, 4-1, 90 Duro, .351" ID x .072" Thk, (Not Shown)
21	H434163	2	DUST CAP,
22	NSS	1	NOT SERVICED SEPARATELY, MOTOR, Hydrostatic
23	NSS	1	NOT SERVICED SEPARATELY, BODY, Valve
24	NSS	1	NOT SERVICED SEPARATELY, VALVE
25	NSS	1	NOT SERVICED SEPARATELY, VALVE
26	NSS	2	NOT SERVICED SEPARATELY, PLUG
27	NSS	2	NOT SERVICED SEPARATELY, SPRING
28	NSS	1	NOT SERVICED SEPARATELY, SHAFT
29	NSS	1	NOT SERVICED SEPARATELY, VALVE

PDF created with pdfFactory trial version www.pdffactory.com

06-10 MOTOR ASSEMBLY, VARIABLE HYDROSTATIC, TWO SPEED, 105.4 - 86.9 CC/REV

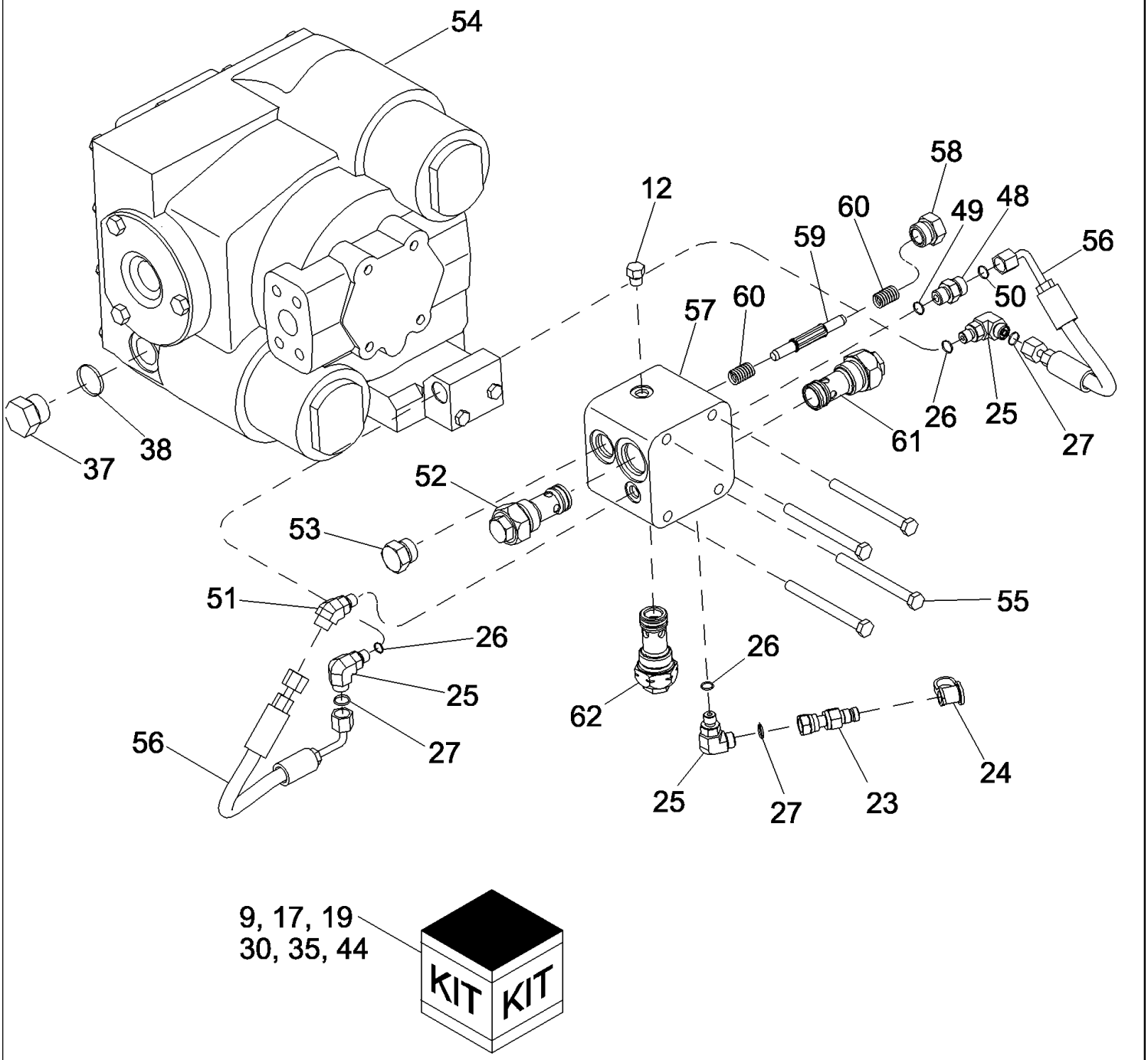

PDF created with pdfFactory trial version www.pdffactory.com

7088 AXIAL-FLOW COMBINE (EU) (4/08-)

06-10 MOTOR ASSEMBLY, VARIABLE HYDROSTATIC, TWO SPEED, 105.4 - 86.9 CC/REV

ссылка	Номер детали	Кол-во	Описание
	87591465	1	MOTOR, HYDROSTATIC, Variable, Two Speed, 105.4 - 86.9 CC/REV, Inc. 1 -
	87477582	1	REMAN-MOTOR HYDRAUL,
	87477578	1	CORE-MOTOR HYDRAULIC,
1	403145A1	1	SEAL, Shaft, (Not Shown)
2	100-21250	1	RING, SNAP, 2.50", Int, #250, (Not Shown)
3	413-720	12	BOLT, Hex, 7/16"-14 x 1 1/4", G5, (Not Shown)
4	37-1510	3	DOWEL, 5/16" x 5/8", (Not Shown)
5	ST863	1	BEARING, CUP, (Not Shown)
6	403147A1	1	SHAFT, Hydrostatic Motor, (Not Shown)
7	142399C1	1	GASKET, Mounting Flange, (Not Shown)
8	100-1356	4	RING, SNAP, #56, Ext, (Not Shown)
9	255825A1	1	KIT, REPAIR, Motor Control Valve, Inc. 10 - 32
10	237-6010	1	O-RING, 10-1, 90 Duro, .755" ID x .097" Thk, (Not Shown)
11	413-528	6	BOLT, Hex, 5/16"-18 x 1 3/4", G5, (Not shown)
12	218-5153	1	PLUG, Hex Hd, 7/16"-20 ORB,
13	237-6004	1	O-RING, 4-1, 90 Duro, .351" ID x .072" Thk, (Not Shown)
14	244387A1	1	VALVE, Solenoid, Inc. 15 - 18, (Not Shown)
15	230594A1	1	SOLENOID, Coil, (Not Shown)
16	255834A1	1	CARTRIDGE, Valve, (Not Shown)
17	1542831C1	1	KIT, SEALS,
18	298986A1	1	NUT, (Not Shown)
19	92649C1	1	KIT, Valve Body With Plug, Inc. 20 - 22
20	1272954C1	1	GASKET, Control Block, (Not Shown)
21	211-1012	1	BALL, 3/8" Dia, (Not Shown)
22	413-560	2	BOLT, Hex, 5/16"-18 x 3 3/4", G5, (Not Shown)
23	190117A1	1	COUPLING, Diagnostic, Inc. 24
24	H434163	1	DUST CAP,
25	201-303	3	ELBOW, 90є, 9/16"-18 x 7/16"-20 Adj, ORFS, Inc. 26, 27
26	237-6004	1	O-RING, 4-1, 90 Duro, .351" ID x .072" Thk,
27	238-6011	1	O-RING, -011, 90 Duro, .301" ID x .070" Thk,
28	255843A1	1	PORT, Control Valve, (Not Shown)
29	145337C1	1	GASKET, Pressure Response Valve, (Not Shown)
30	413431A1	1	KIT, Two Speed Motor Control Fittings, Inc. 31, 32
31	413432A1	2	ELBOW, Two Speed Motor Control Valve, (Not Shown)
32	211-1012	1	BALL, 3/8" Dia, (Not Shown)
33	413-714	6	BOLT, Hex, 7/16"-14 x 7/8", G5, Full Thd, (Not Shown)
34	238-5234	2	O-RING, -234, 70 Duro, 2.984" ID x .139" Thk, (Not Shown)
35	142386C91	1	KIT, SHIM, Trunnion, Inc. 36
36	NSS	6	NOT SERVICED SEPARATELY, Shim, 0.002 mm, (Not Shown)
36	NSS	4	NOT SERVICED SEPARATELY, Shim, 0.005 mm, (Not Shown)
36	NSS	4	NOT SERVICED SEPARATELY, Shim, 0.010 mm, (Not Shown)

PDF created with pdfFactory trial version www.pdffactory.com

ссылка	Номер детали	Кол-во	Описание
36	NSS	4	NOT SERVICED SEPARATELY, Shim, 0.020 mm, (Not Shown)
36	NSS	4	NOT SERVICED SEPARATELY, Shim, 0.025 mm, (Not Shown)
37	163410	1	PLUG, Hex Hd, 1 1/16"-12 ORB, Inc. 38
38	167266	1	O-RING, 12-1, 90 Duro, .924 ID x .116" Thk,
39	278548	1	PLUG, Hex Soc, 7/16"-20 ORB, (Not Shown)
40	142408C1	2	RETAINER, (Not Shown)
41	461-3086	6	SCREW, Hex Soc Hd, #8-32 x 3/8", (Not Shown)
42	92741C2	1	GASKET, End Cover, (Not Shown)
43	530740R91	1	BEARING, ROLLER, End Cover, (Not Shown)
44	142398C91	1	KIT, SHIM, Drive Shaft, Inc. 45
45	NSS	1	NOT SERVICED SEPARATELY, Shim, 0.003 mm, (Not Shown)
45	NSS	1	NOT SERVICED SEPARATELY, Shim, 0.005 mm, (Not Shown)
45	NSS	1	NOT SERVICED SEPARATELY, Shim, 0.010 mm, (Not Shown)
45	NSS	1	NOT SERVICED SEPARATELY, Shim, 0.015 mm, (Not Shown)
45	NSS	1	NOT SERVICED SEPARATELY, Shim, 0.20 mm, (Not Shown)
45	NSS	1	NOT SERVICED SEPARATELY, Shim, 0.030 mm, (Not Shown)
46	413-748	6	BOLT, Hex, 7/16"-14 x 3", G5, (Not Shown)
47	426-732	2	BOLT, Hex, 7/16"-14 x 2", G8, (Not Shown)
48	201-100	1	CONNECTOR, HYD., 9/16"-18 ORFS x 7/16"-20 ORB, Inc. 49, 50
49	237-6004	1	O-RING, 4-1, 90 Duro, .351" ID x .072" Thk,
50	238-6011	1	O-RING, -011, 90 Duro, .301" ID x .070" Thk,
51	201-331	1	ELBOW, 45є, 9/16"-18 x 7/16"-20. Adj, ORFS,
52	NSS	1	NOT SERVICED SEPARATELY, VALVE
53	NSS	1	NOT SERVICED SEPARATELY, PLUG
54	NSS	1	NOT SERVICED SEPARATELY, MOTOR, Hydrostatic
55	413-664	4	BOLT, Hex, 3/8"-16 x 4", G5,
56	192384A1	2	HOSE, Two Speed Response
57	NSS	1	NOT SERVICED SEPARATELY, BODY, Valve
58	NSS	1	NOT SERVICED SEPARATELY, PLUG
59	NSS	1	NOT SERVICED SEPARATELY, SHAFT
60	NSS	2	NOT SERVICED SEPARATELY, SPRING
61	NSS	1	NOT SERVICED SEPARATELY, VALVE
62	NSS	1	NOT SERVICED SEPARATELY, VALVE

PDF created with pdfFactory trial version www.pdffactory.com

06-11 SHIFT ASSEMBLY, TRANSMISSION

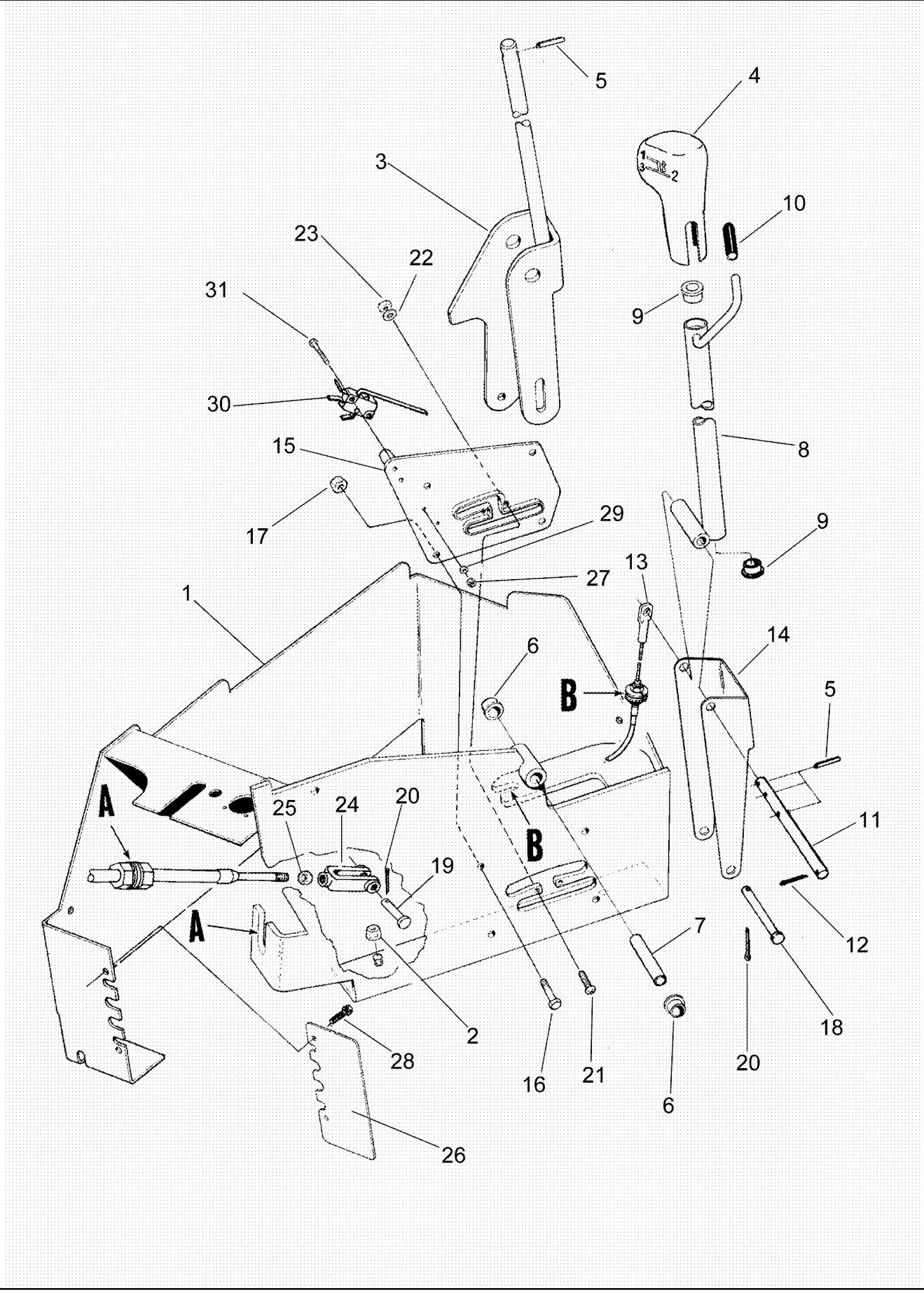

PDF created with pdfFactory trial version www.pdffactory.com

7088 AXIAL-FLOW COMBINE (EU) (4/08-)

06-11 SHIFT ASSEMBLY, TRANSMISSION

ссылка	Номер детали	Кол-во	Описание
1	87585239	1	BRACKET, Shifter Weldment
2	825-5148	4	NUT, M8, Flg Ser,
3	122751A3	1	LEVER, Transmission Shift, 2nd and 3rd Speed
4	122205A3	1	HANDLE, Upper Shift
5	838-1428	4	PIN, LOCK, M4 x 28, Slotted,
6	S115001	2	BEARING,
7	122199A1	1	PIN, PIVOT,
	197971A2	1	TUBE, Transmission Shift, 1st Speed, Inc. 8, 9
8	NSS	1	NOT SERVICED SEPARATELY, TUBE
9	90-4368T1	2	BUSHING,
10	125803A1	1	SLEEVE,
11	122197A2	1	SPLIT PIN/SAFETY PIN,
12	432-612	3	PIN, SPLIT (COTTER), 3/32" x 3/4",
13	115398A1	1	CABLE, 3209 mm (126"), Transmission Shift, 1st Speed
14	124714A2	1	SUPPORT,
15	122757A3	1	GUIDE, Shift Gate
16	614-6020	4	BOLT, Hex, M6 x 20, 8.8,
17	825-5146	4	NUT, M6, Flg Ser,
18	427-6325	1	PIN, CLEVIS, 3/8" x 3 1/4",
19	427-5094	1	PIN, CLEVIS, 5/16" x .940",
20	432-612	2	PIN, SPLIT (COTTER), 3/32" x 3/4",
21	840-1420	2	SCREW, Cross Pan Hd, M4 x 20,
22	895-11004	2	WASHER, M4,
23	824-1404	2	NUT, M4, Cl 5,
24	213-125	1	CLEVIS, ADJUSTABLE, 5/16"-24,
25	115397A1	1	CABLE, Transmission Shift, 2nd and 3rd Speed
26	122750A1	1	PLATE, Bulkhead
27	225-14104	2	NUT, #4-40,
28	191216A1	2	SCREW, SELF TAPPING, Hex Wash Hd, #10-24 x 5/8",
29	495-31022	2	WASHER, #10,
30	60-6515T1	1	SWITCH, Third Gear Lockout
31	463-10412	2	SCREW, Hex Hd, #4-40 x 3/4",

PDF created with pdfFactory trial version www.pdffactory.com

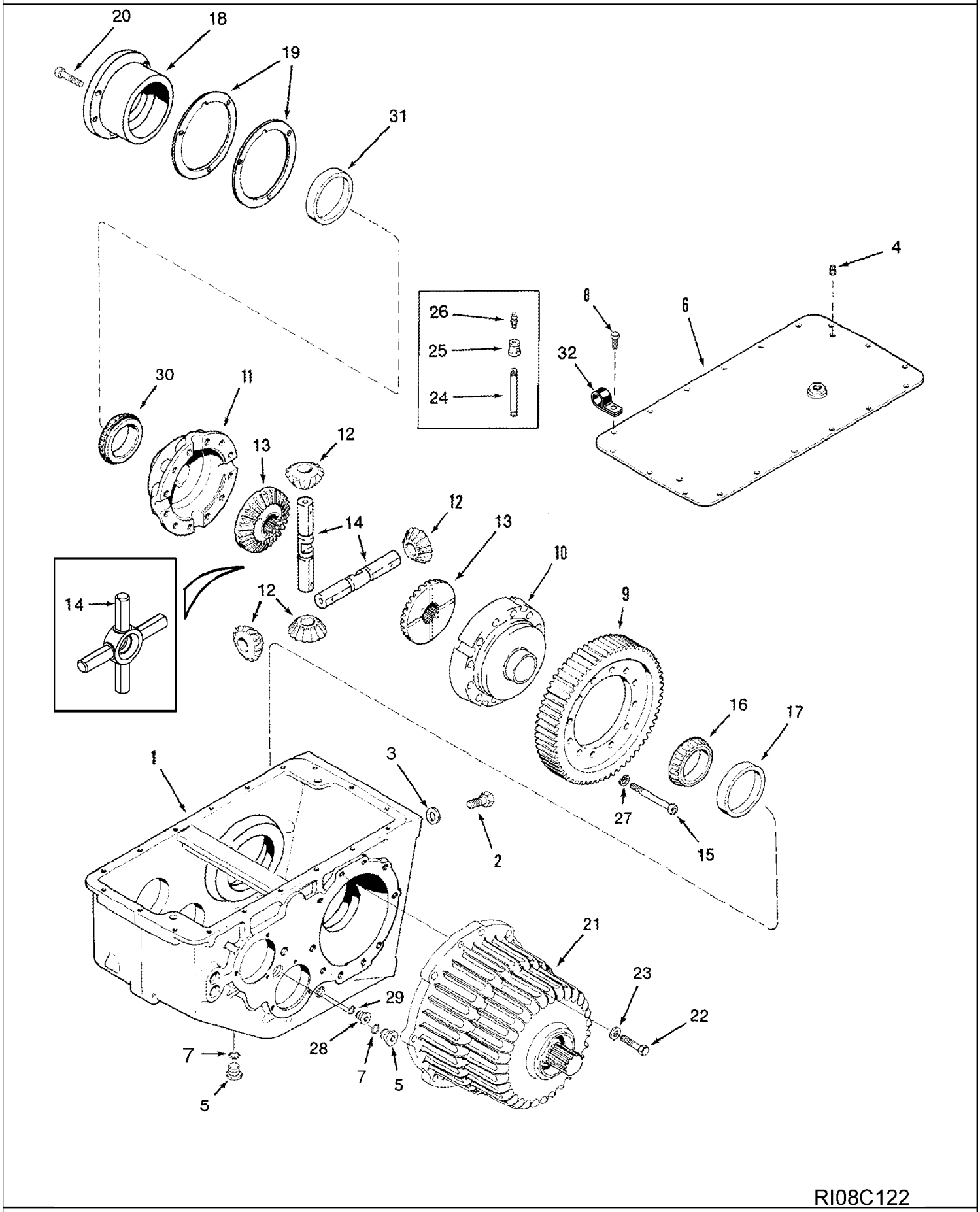

RI08C122

PDF created with pdfFactory trial version www.pdffactory.com

7088 AXIAL-FLOW COMBINE (EU) (4/08-)

06-12 TRANSMISSION ASSEMBLY - HOUSING AND DIFFERENTIAL

ссылка	Номер детали	Кол-во	Описание
	87393461	1	TRANSMISSION, 37/35 Change Gears, Inc. 1 - 31, Also Inc. Parts On Figure(s) 06-20, 06-21, Corn and Grain Combine
	87393465	1	TRANSMISSION, 34/38 Change Gears, Inc. 1 - 31, Also Inc. Parts On Figure(s) 06-20, 06-21, Rice Combine
1	236715A1	1	HOUSING,
2	627-16050	4	BOLT, Hex, M16 x 50, 10.9,
3	896-11016	4	WASHER, M17.5 x 30 x 4, HT,
4	217-504	2	PLUG, DRAIN, Hex Hd, 1/4"-18, NPTF,
5	9841223	2	PLUG, Hex Soc, 1 1/16"-12 ORB, Inc. 7
6	239456A1	1	COVER, Housing
7	237-6012	1	O-RING, 12-1, 90 Duro, .924 ID x .118" Thk,
8	613-10020	18	BOLT, Hex, M10 x 20, 8.8, Full Thd,
9	87354342	1	GEAR, 66T, Differential
	236380A1	1	HOUSING, Differential, Inc. 10, 11
10	NSS	1	NOT SERVICED SEPARATELY, HOUSING, Right Hand
11	NSS	1	NOT SERVICED SEPARATELY, HOUSING, Left Hand
12	361061R3	4	PINION, 15T
13	236377A1	2	GEAR, RING, 28T
14	393637R2	1	SPIDER, DIFF.,
15	863-16090	12	SCREW, Hex Soc Hd, M16 x 95, 12.9,
16	383741R91	1	
17	379858R1	1	BEARING, CUP,
18	1997956C2	1	CAGE,
19	1997957C2	AR	SHIM, 0.813mm Thk,
19	1997958C2	AR	SHIM, 0.127mm Thk,
19	1997947C2	AR	SHIM, 0.076mm Thk,
20	863-10025	5	SCREW, Hex Soc Hd, M10 x 25, 12.9,
21	236388A1	2	BRAKE ASSY., Master, See Figure 07-04
22	963-12040	20	SCREW, Hex Soc Hd, M12 x 40, 10.9,
23	896-11012	20	WASHER, M13.5 x 24.5 x 3, HT,
24	121210	1	PIPE, Nipple, 1/4" NPT x 4 1/2",
25	135950A1	1	ADAPTER, Housing Cover
26	219-434	1	BREATHER, 1/8"-27 NPT, Short, w/washer, Transmission Case Oil
27	896-12016	12	WASHER, M17.5 x 30 x 4, HT,
28	86625138	1	PLUG, Hex Soc, 7/8"-14 ORB, Inc. 29
29	218-5007	1	O-RING, 10-1, 90 Duro, .755" ID x .097" Thk,
30	131475R91	1	BEARING,
31	972466R1	1	CUP,
32	516-23127	3	CLAMP, J, 9/16" Insul, 3/8" Bolt,

PDF created with pdfFactory trial version www.pdffactory.com

06-13 TRANSMISSION ASSEMBLY - DIFFERENTIAL PINION SHAFT AND GEARS

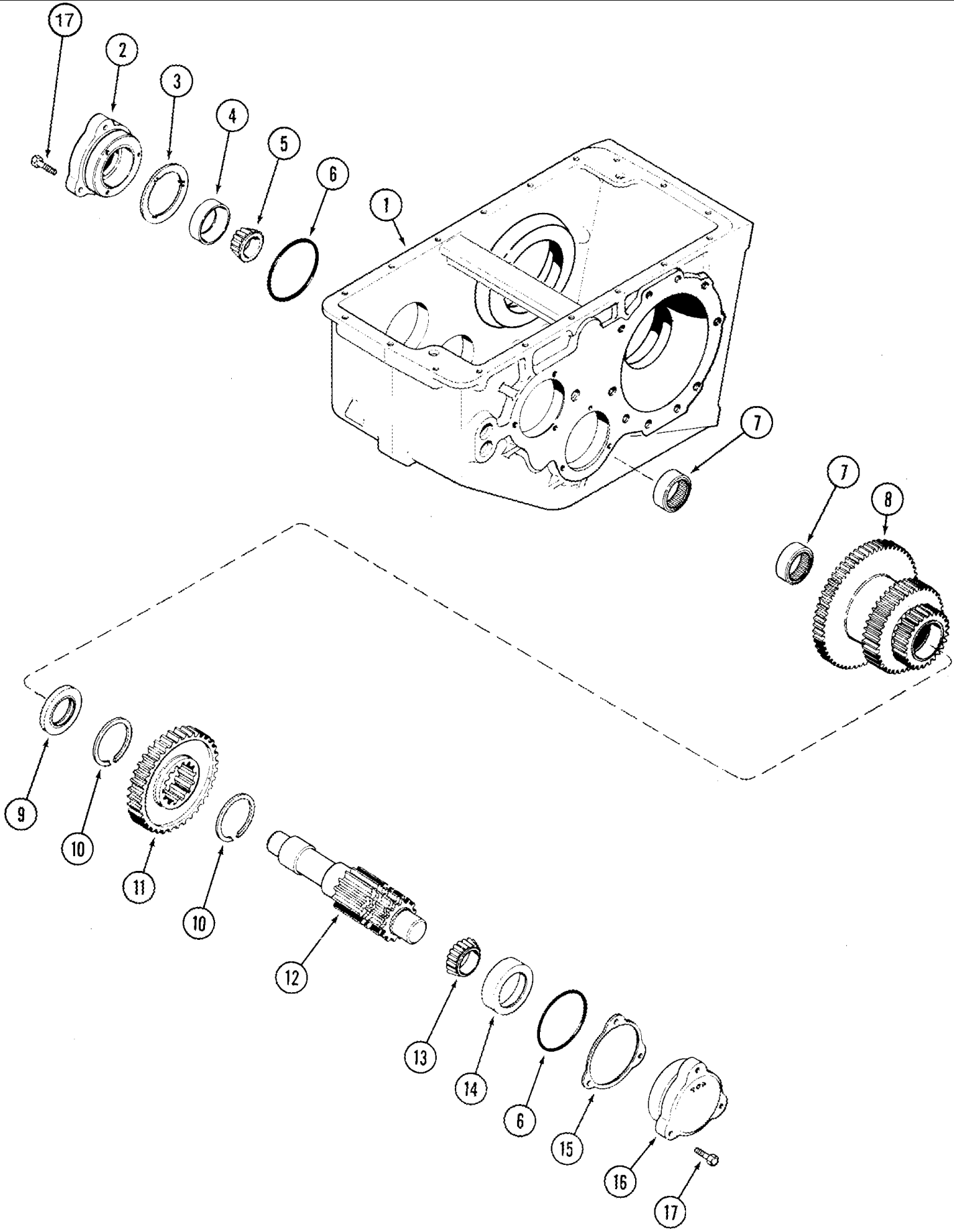

PDF created with pdfFactory trial version www.pdffactory.com

06-13 TRANSMISSION ASSEMBLY - DIFFERENTIAL PINION SHAFT AND GEARS

ссылка	Номер детали	Кол-во	Описание
	87393461	1	TRANSMISSION, 37/35 Change Gears, Inc. 1 - 17, Also Inc. Parts On Figure(s) 06-19, 06-21, Corn and Grain Combine
	87393465	1	TRANSMISSION, 34/38 Change Gears, Inc. 1 - 17, Also Inc. Parts On Figure(s) 06-19, 06-21, Rice Combine
1	REF	1	INSTRUCTION, Housing, See Figure 06-12, REF 1
2	1997933C1	1	HOUSING, BEARING, Left Hand
3	530704R2	1	WASHER,
4	131312C1	1	BEARING, CUP, Left Hand Pinion Shaft
5	131311C91	1	BEARING, CONE,
6	238-7154	3	O-RING, -154, Cl 7, 3.737" ID x .103" Thk,
7	675708R91	2	BEARING, NEEDLE,
8	87305298	1	GEAR, 59T, 39T, 27T
9	401879R1	1	SPACER,
10	196693H1	2	RING,
11	1997649C1	1	PINION, 35T, Change Driven, Corn and Grain Combine
11	1349045C1	1	PINION, 38T, Change Driven, Rice Combine
12	87354341	1	AXLE, 14T
13	57862H	1	BEARING, CONE,
14	57861H	1	BEARING, CUP,
15	401883R2	AR	SHIM, 0.076mm Thk, (0.003")
15	401884R2	AR	SHIM, 0.127mm Thk, (0.005")
15	401885R2	AR	SHIM, 0.178mm Thk, (0.007")
15	184195C2	AR	SHIM, 0.762mm Thk, (0.030")
16	1997984C1	1	HOUSING, BEARING, Right Hand
17	628-10035	6	BOLT, Hex, M10 x 35, 10.9, Full Thd,

PDF created with pdfFactory trial version www.pdffactory.com

06-14 TRANSMISSION ASSEMBLY - INPUT SHAFT, GEARS AND SHIFTER RAILS

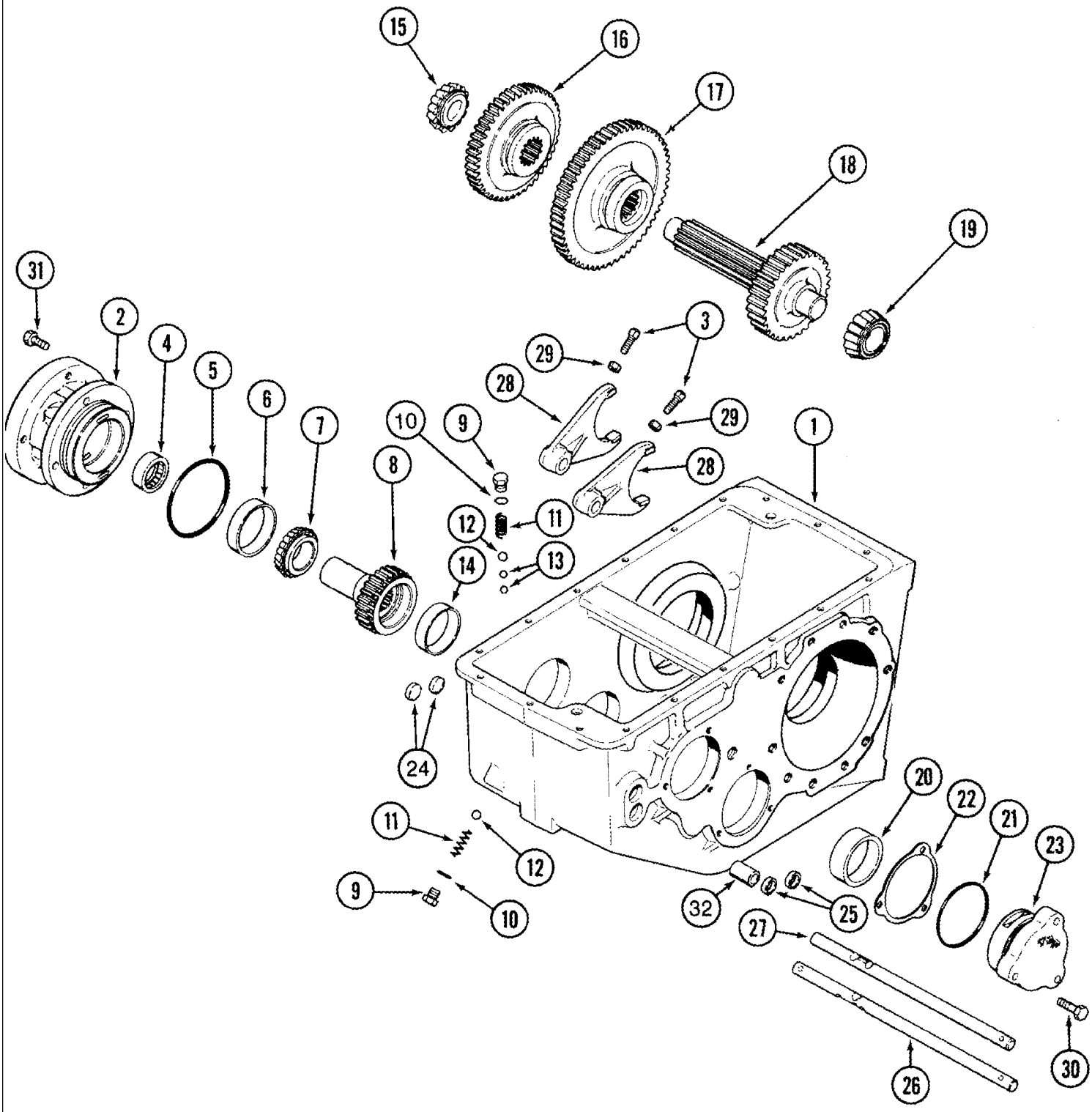

PDF created with pdfFactory trial version www.pdffactory.com

06-14 TRANSMISSION ASSEMBLY - INPUT SHAFT, GEARS AND SHIFTER RAILS

ссылка	Номер детали	Кол-во	Описание
	87393461	1	TRANSMISSION, 37/35 Change Gears, Inc. 1 - 32, Also Inc. Parts On Figure(s) 06-19, 06-20, Corn and Grain Combine
	87393465	1	TRANSMISSION, 34/38 Change Gears, Inc. 1 - 32, Also Inc. Parts On Figure(s) 06-19, 06-20, Rice Combine, See Figure 06-12, REF 1
1	REF	1	INSTRUCTION, Housing
2	1997934C1	1	HOUSING, Input Shaft
3	1997657C1	2	SET SCREW,
4	359950R91	1	BEARING, NEEDLE, 1-3/4" ID
5	238-5348	1	O-RING, -348, 70 Duro, 4.35" ID x .210" Thk,
6	130503H	1	BEARING, CUP, 3-17/64 OD
7	300426R91	1	BEARING, CONE, 1-25/32 ID
8	184217C1	1	SHAFT, Input Pinion, 26T
9	76349	2	PLUG, Hex Hd, 9/16"-18 ORB, Incl. 10
10	237-6006	1	O-RING, 6-1, 90 Duro, .468" ID x .078" Thk,
11	87670320	2	SPRING,
12	211-1016	2	BALL, 1/2" Dia, Gr.24, CRS
13	211-1014	2	BALL, 7/16" Dia, 24,CRS
14	51200379	1	BEARING, CUP, 2-3/4 OD
15	50212VA	1	BEARING, CONE, 1-5/16 ID
16	87305299	1	GEAR, 26T, 46T, Second and Third Sliding
17	401889R1	1	GEAR, 58T, First Sliding
19	290099C91	1	BEARING, CONE, 1-9/16 ID, Corn and Grain Combine
18	1997650C1	1	SHAFT, 37T, Drive Gear
20	290100C1	1	BEARING, CUP, 2-7/8 OD, Rice Combine
18	1349044C1	1	SHAFT, 34T, Drive Gear
21	238-7154	1	O-RING, -154, Cl 7, 3.737" ID x .103" Thk,
22	401883R2	AR	SHIM, 0.076mm Thk, (0.003")
22	401884R2	AR	SHIM, 0.127mm Thk, (0.005")
22	401885R2	AR	SHIM, 0.178mm Thk, (0.007")
22	184195C2	AR	SHIM, 0.762mm Thk, (0.030")
23	1997998C1	1	COVER, Bearing
24	41-1012	2	PLUG, Cup, 3/4",
25	1997906C1	2	SEAL, Shifter Rail Oil
26	87574759	1	SHIFT RAIL, Second and Third Gear Shifter
27	1342443C3	1	SHIFT RAIL, First Gear Shifter
28	1997656C1	2	FORK, SHIFTER,
29	829-1310	2	NUT, M10, Cl 10,
30	628-10035	3	BOLT, Hex, M10 x 35, 10.9, Full Thd,
31	613-10025	4	BOLT, Hex, M10 x 25, 8.8, Full Thd,
32	189168A1	1	SPACER, Shift Rail

PDF created with pdfFactory trial version www.pdffactory.com

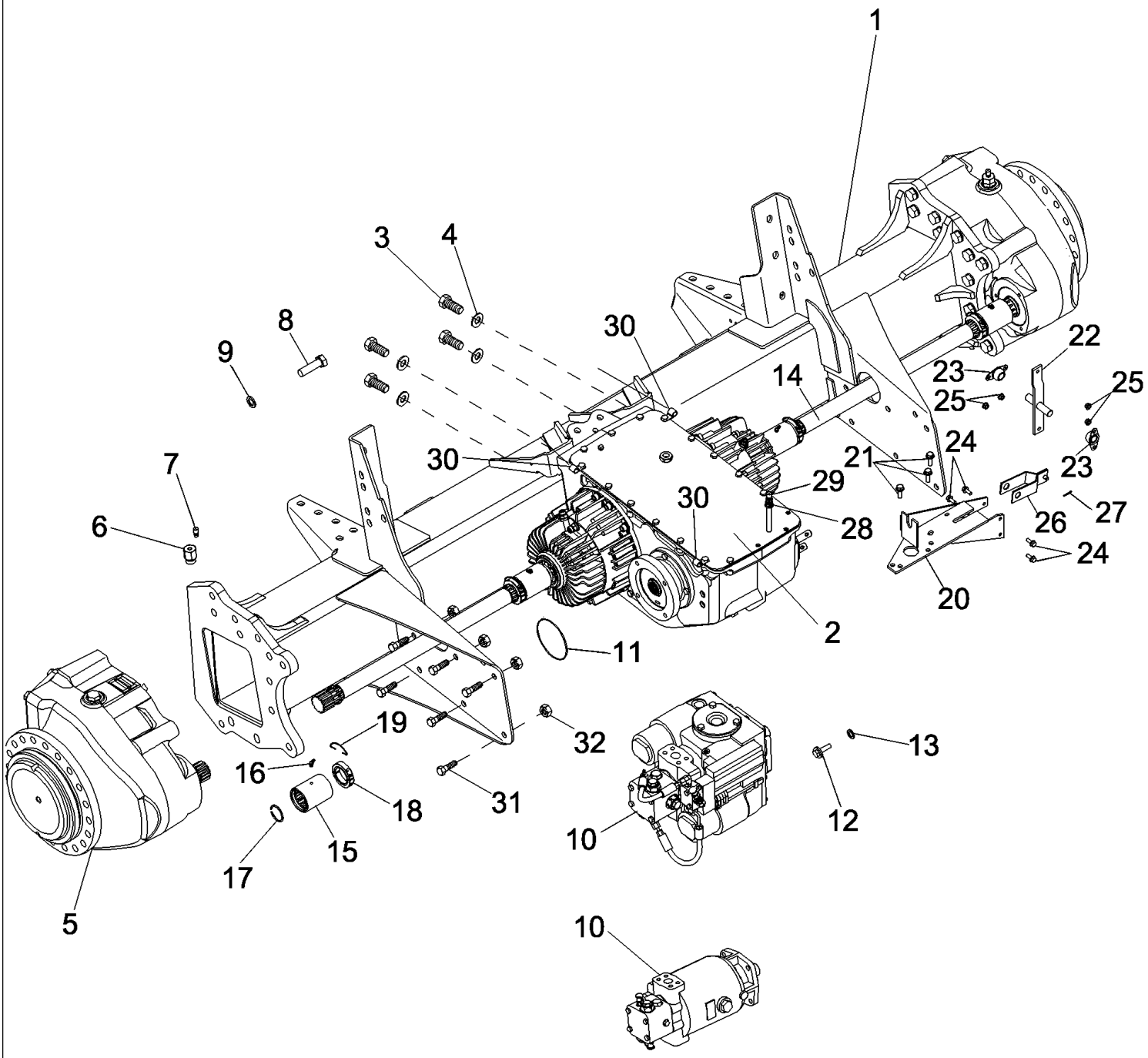

PDF created with pdfFactory trial version www.pdffactory.com

7088 AXIAL-FLOW COMBINE (EU) (4/08-)

06-15 AXLE ASSEMBLY, DRIVE

ссылка	Номер детали	Кол-во	Описание
1	87633182	1	AXLE DRIVE,
2	87393465	1	TRANSMISSION, Rice, 34/38, See Figure 06-12
3	627-16050	4	BOLT, Hex, M16 x 50, 10.9,
4	896-11016	4	WASHER, M17.5 x 30 x 4, HT,
5	87695215	2	GEARBOX ASSY, Final Drive, See Figure 06-17
6	135950A1	2	ADAPTER, Final Drive Vent
7	219-434	2	BREATHER, 1/8"-27 NPT, Short, w/washer,
8	827-20070	26	BOLT, Hex, M20 x 70, 10.9,
9	137339A2	26	WASHER,
10	87374885	1	MOTOR, HYDROSTATIC, Fixed, Single Speed, 105.4 CC/REV, See Figure 06-09
10	87374877	1	MOTOR, HYDROSTATIC, Fixed, Single Speed, 89.13 CC/REV, See Figure 06-09
11	274336	1	O-RING, -158, 70 Duro, 4.737" ID x .103" Thk,
12	628-12040	4	BOLT, Hex, M12 x 40, 10.9, Full Thd, Single Speed Motor
12	828-12045	4	BOLT, Hex, M12 x 45, 10.9, Full Thd, Two Speed Motor
13	896-11012	4	WASHER, M13.5 x 24.5 x 3, HT, Single Speed Motor
13	396-41053	4	WASHER, 17/32" x 1 1/4" x .188", HDN, Two Speed Motor
14	87703493	2	SHAFT, Final Drive
15	245213A1	4	COUPLING, Transmission to Final Driveshaft
16	219-45	4	NIPPLE, LUBE, 65є, 1/4" NPT x .77" lg, Drive,
17	123763A1	4	RING, SNAP,
18	244549A1	4	COLLAR, Two Piece, Shaft
19	245105A2	4	CLIP, SPRING,
20	181376A1	1	SUPPORT, Transmission Shift Linkage
21	87698837	3	BOLT,
22	84160202	1	LEVER,
23	87364072	2	BEARING, Pivot Upper and Lower
24	87656137	4	BOLT, Hex Flg, M8 x 20, 10.9, Full Thd,
25	86507066	4	NUT, M8 x 1.25, Flg, Cl 10,
26	194437C1	1	LINK, Shift Rail Control
27	432-612	1	PIN, SPLIT (COTTER), 3/32" x 3/4",
28	121210	1	PIPE, Nipple, 1/4" NPT x 4 1/2",
29	105420	1	FITTING, REDUCER,
30	516-23127	3	CLAMP, J, 9/16" Insul, 3/8" Bolt,
31	86978772	38	BOLT,
32	86512498	38	NUT, M16 x 2, Flg, Cl 10,

PDF created with pdfFactory trial version www.pdffactory.com

7088 AXIAL-FLOW COMBINE (EU) (4/08-)

06-15A FRONT AXLE WIRE SHIELD

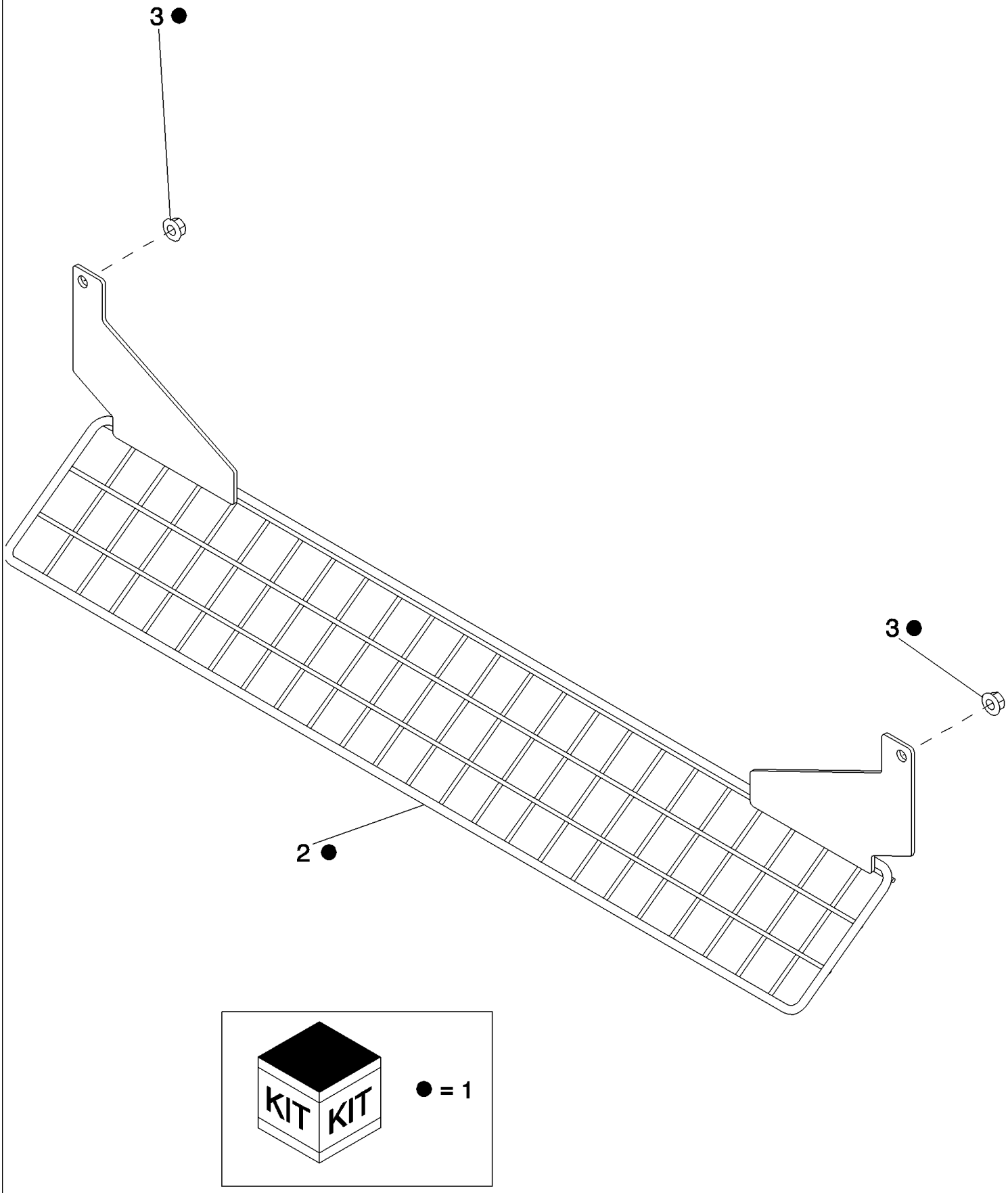

PDF created with pdfFactory trial version www.pdffactory.com

7088 AXIAL-FLOW COMBINE (EU) (4/08-)

06-15A FRONT AXLE WIRE SHIELD

ссылка	Номер детали	Кол-во	Описание
1	87478612	1	KIT, SERVICE, DIA, Wire Shield, Inc. 2, 3
2	87754962	1	BRACKET, Top Front Axle
3	86512497	2	NUT, M12 x 1.75, Flg, Cl 10,

PDF created with pdfFactory trial version www.pdffactory.com

7088 AXIAL-FLOW COMBINE (EU) (4/08-)

06-16 AXLE EXTENSION 70 MM

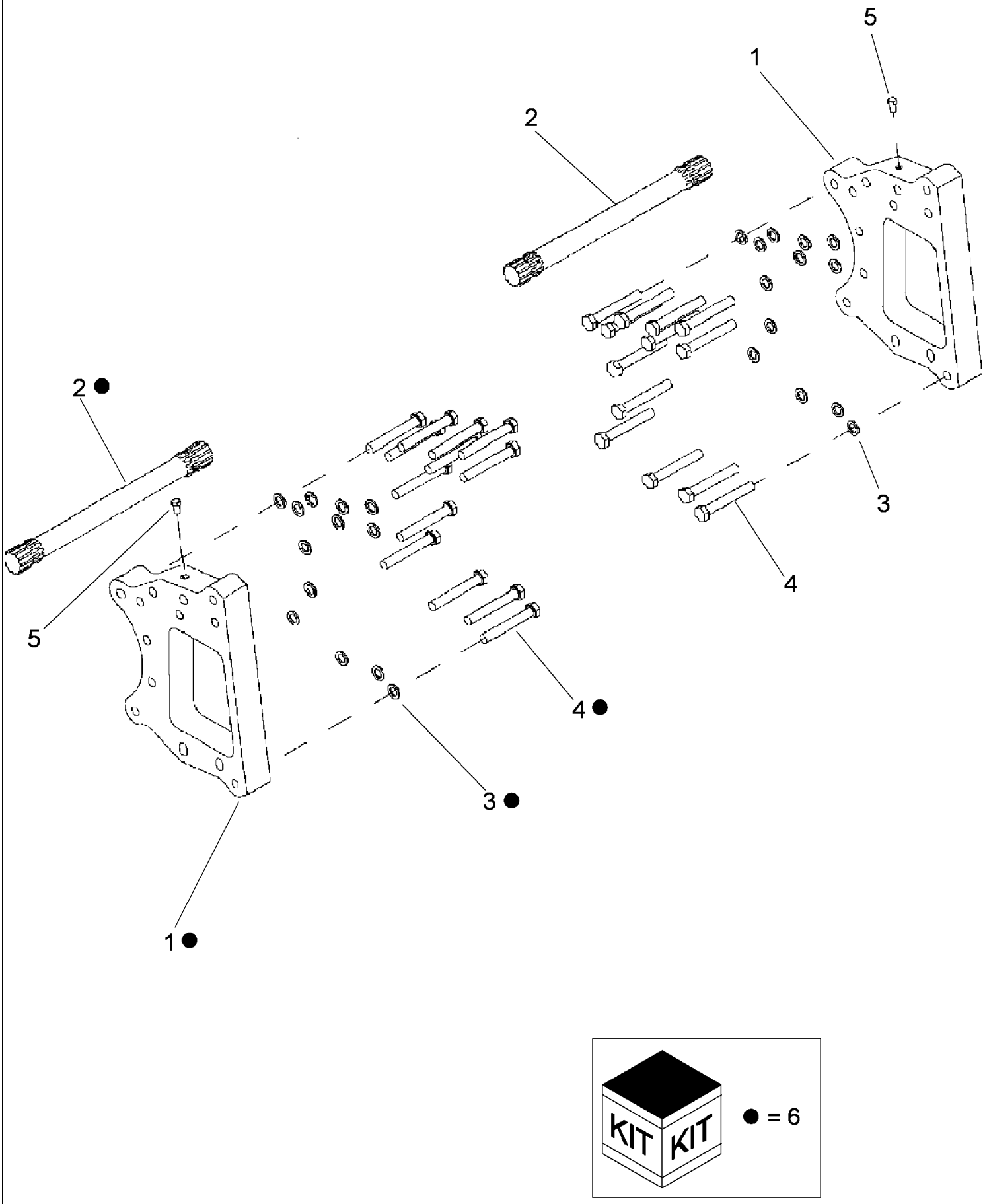

PDF created with pdfFactory trial version www.pdffactory.com

7088 AXIAL-FLOW COMBINE (EU) (4/08-)

06-16 AXLE EXTENSION 70 MM

ссылка	Номер детали	Кол-во	Описание
1	87704454	1	EXTENSION, Axle, 70 mm, 650 Tire
1	87704454	2	EXTENSION, Axle, 70 mm, 900 Tire
2	87703491	1	SHAFT, Final Drive, 572 mm, 650 Tire
2	87703491	2	SHAFT, Final Drive, 572 mm, 900 Tire
2	87638946	1	SHAFT, Final Drive, 502 mm, 650 Tire
2	87638946	2	SHAFT, Final Drive, 502 mm, 800 Tire
3	137339A2	26	WASHER, Final Drive
4	827-20140	13	BOLT, Hex, M20 x 140, 10.9, , 650 Tire
4	827-20140	26	BOLT, Hex, M20 x 140, 10.9, , 900 Tire
4	827-20070	13	BOLT, Hex, M20 x 70, 10.9, , 650 Tire
4	827-20070	26	BOLT, Hex, M20 x 70, 10.9, , 800 Tire
5	43151	1	BOLT, Hex, M12 x 20, 8.8, Full Thd, , 650 Tire
5	43151	2	BOLT, Hex, M12 x 20, 8.8, Full Thd, , 900 Tire
6	87726652	1	PACKAGE,SERVICE, DIA, Axle Extension, 70 mm, Inc. 1-4, 6088, 7088

PDF created with pdfFactory trial version www.pdffactory.com

06-17 FINAL DRIVE ASSY

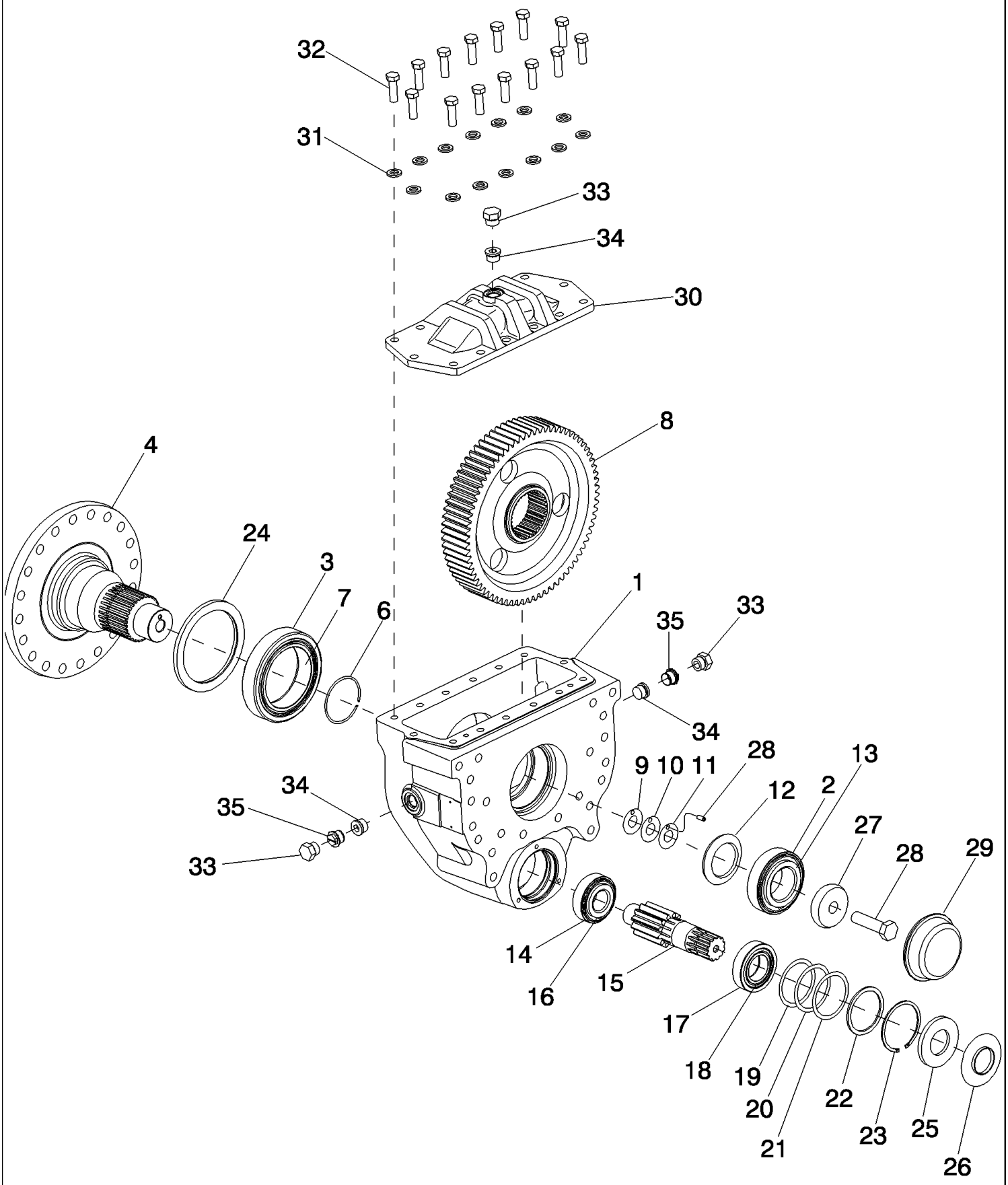

PDF created with pdfFactory trial version www.pdffactory.com

7088 AXIAL-FLOW COMBINE (EU) (4/08-)

06-17 FINAL DRIVE ASSY

ссылка	Номер детали	Кол-во	Описание
1	87695213	1	HOUSING, Final Drive
2	71455R1	1	BEARING, CUP,
3	135649A1	1	BEARING, CUP,
4	87338661	1	SHAFT, Final Drive Axle
5	37-1512	1	DOWEL, 5/16" x 3/4",
6	135297A1	1	CIRCLIP, Final Drive Shaft
7	335947A1	1	BEARING, CONE,
8	87354349	1	GEAR, Driven 73T Final Drive
9	135301A1	1	SHIM, 0.635mm Thk, Final Drive Output
10	135300A1	1	SHIM, 0.457mm Thk, Final Drive Output
11	135299A1	1	SHIM, 0.051mm Thk, Final Drive Output
12	135307A1	1	SPACER, Final Drive
13	135294A1	1	BEARING, CONE,
14	135650A1	1	BEARING, CUP,
15	87354348	1	AXLE, Pinion 12T Final Drive Input
16	135295A1	1	BEARING, CONE,
17	K4729	1	BEARING, CONE,
18	135651A1	1	BEARING, CUP,
19	135305A1	1	SHIM, 0.63mm Thk, Final Drive Input
20	135303A1	1	SHIM, 0.46mm Thk, Final Drive Input
21	135302A1	1	SHIM, 0.051mm Thk, Final Drive Input
22	193652A1	1	WASHER, 3.96
23	101-21412	1	RING, SNAP, #412, 4.430", Int,
24	135293A1	1	SEAL, Oil
25	135292A1	1	SEAL, Oil
26	135291A1	1	GUARD, Seal
27	135289A1	1	RETAINER, Plate Bearing
28	828-24090	1	BOLT, Hex, M24 x 90 10.9,
29	135296A1	1	COVER, Bearing
30	135286A1	1	COVER, Final Drive Housing
31	896-11016	14	WASHER, M17.5 x 30 x 4, HT,
32	628-16050	14	BOLT, Hex, M16 x 50, 10.9, Full Thd,
33	218-5158	3	PLUG, Hex Hd, 1 1/16"-12 ORB,
34	218-5212	3	PLUG, Hex Soc, 1 1/16"-12 ORB,
35	353-782	2	PLUG, Slotted, 1 1/16"-12,

PDF created with pdfFactory trial version www.pdffactory.com

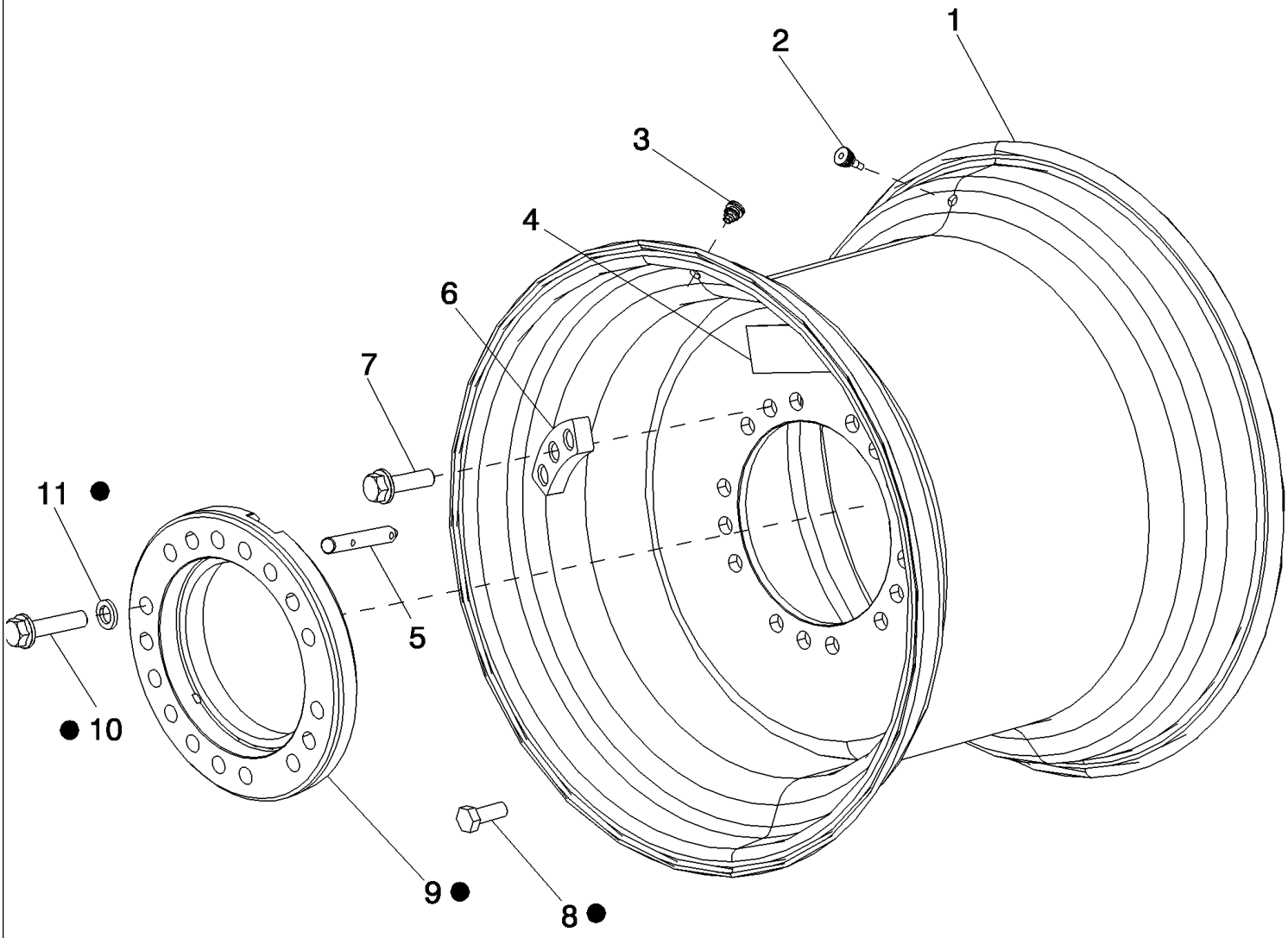

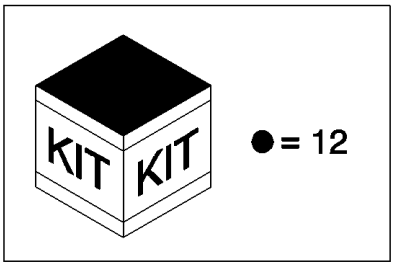

PDF created with pdfFactory trial version www.pdffactory.com

7088 AXIAL-FLOW COMBINE (EU) (4/08-)

06-18 WHEELS, DRIVE, SINGLE

ссылка	Номер детали	Кол-во	Описание
1	87692466	2	WHEEL ASSY., 32 x DW27A
1	87640619	2	WHEEL ASSY., 32 x DW21A
2	87106339	2	VALVE STEM,
3	86997685	2	VALVE STEM, Valve Hole
4	87570139	2	DECAL, Single Wheel Torque
5	87283521	2	STUD, M22 x 180, Drive Wheel Starter
6	87598803	10	PLATE, Wheel Mounting Spacer
7	87327478	20	BOLT,
8	87340028	4	BOLT,
9	87708102	2	SPACER, Wheel, 51mm
10	87367550	20	BOLT, Hex, M22 x 95, Cl 12.9, Dual Wheel Mounting
11	87327481	20	WASHER, Dual Wheel Mounting
12	87726650	1	PACKAGE,SERVICE, DIA, 51 mm Wheel Spacer With Hardware, Inc. 8-11, 6088, 7088

PDF created with pdfFactory trial version www.pdffactory.com

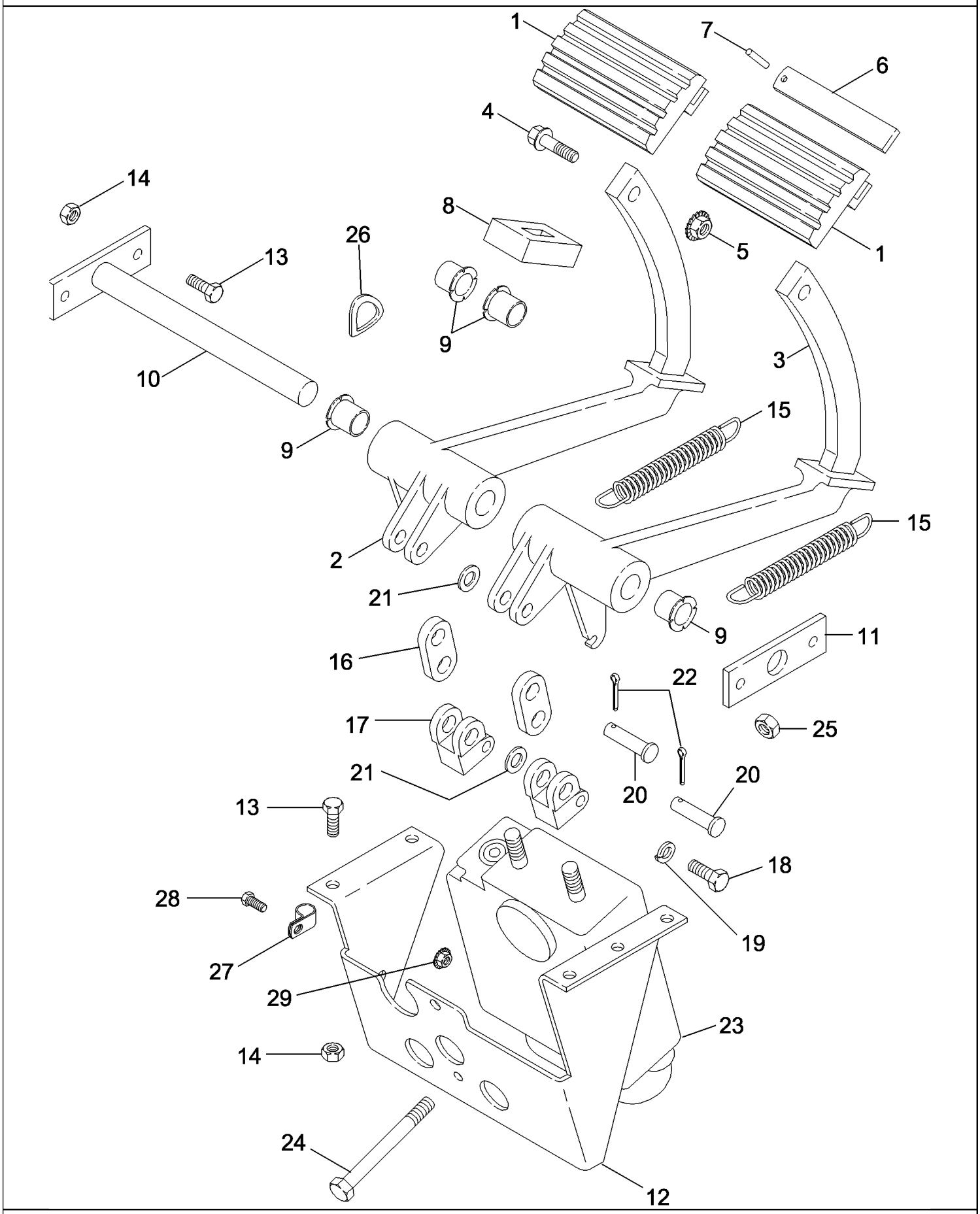

PDF created with pdfFactory trial version www.pdffactory.com

7088 AXIAL-FLOW COMBINE (EU) (4/08-)

07-01 CONTROLS - BRAKES, MASTER

ссылка	Номер детали	Кол-во	Описание
1	119902A1	2	PAD, Brake Pedal
2	138017A4	1	PEDAL, Brake, Left Hand
3	138016A4	1	PEDAL, Brake, Right Hand
4	905-10035	2	BOLT, Hex Serr Flg, M10 x 35,
5	825-51410	2	NUT, M10, Flg Ser,
6	119903A1	1	PLATE, Brake Locking
7	38-3814	1	PIN, 1/8" x 7/8", Coiled,
8	120159A1	2	SEAL, Pedal
9	185062R1	4	BUSHING,
10	120160A2	1	SHAFT, Pivot
11	1281794C1	1	PLATE, Pivot Shaft Support
12	121496A3	1	SUPPORT, Power Brake
13	614-8025	9	BOLT, Hex, M8 x 25, 8.8,
14	825-5148	9	NUT, M8, Flg Ser,
15	182652A1	2	SPRING, 27.9 OD x 122 mm
16	384082R1	2	LINK, Brake Operating
17	384083R2	2	CLEVIS, Brake Operating
18	413-518	2	BOLT, Hex, 5/16"-18 x 1 1/8", G5, Full Thd,
19	492-11031	2	WASHER, LOCK, 5/16",
20	427-8168	4	PIN, CLEVIS, 1/2" x 1 11/16"',
21	495-11053	4	WASHER, 1/2", SAE,
22	432-816	4	PIN, SPLIT (COTTER), 1/8" x 1",
23	137449A2	1	VALVE, BRAKE, Master Control, See Figure 07-05
24	413-656	2	BOLT, Hex, 3/8"-16 x 3 1/2", G5,
25	425-166	2	NUT, 3/8"-16, G5, Hvy,
26	G49413	1	WASHER,
27	516-23127	1	CLAMP, J, 9/16" Insul, 3/8" Bolt,
28	614-8016	1	BOLT, Hex, M8 x 16, 8.8,
29	825-2408	1	NUT, M8 x 1.25, Flg, Cl 8,

PDF created with pdfFactory trial version www.pdffactory.com

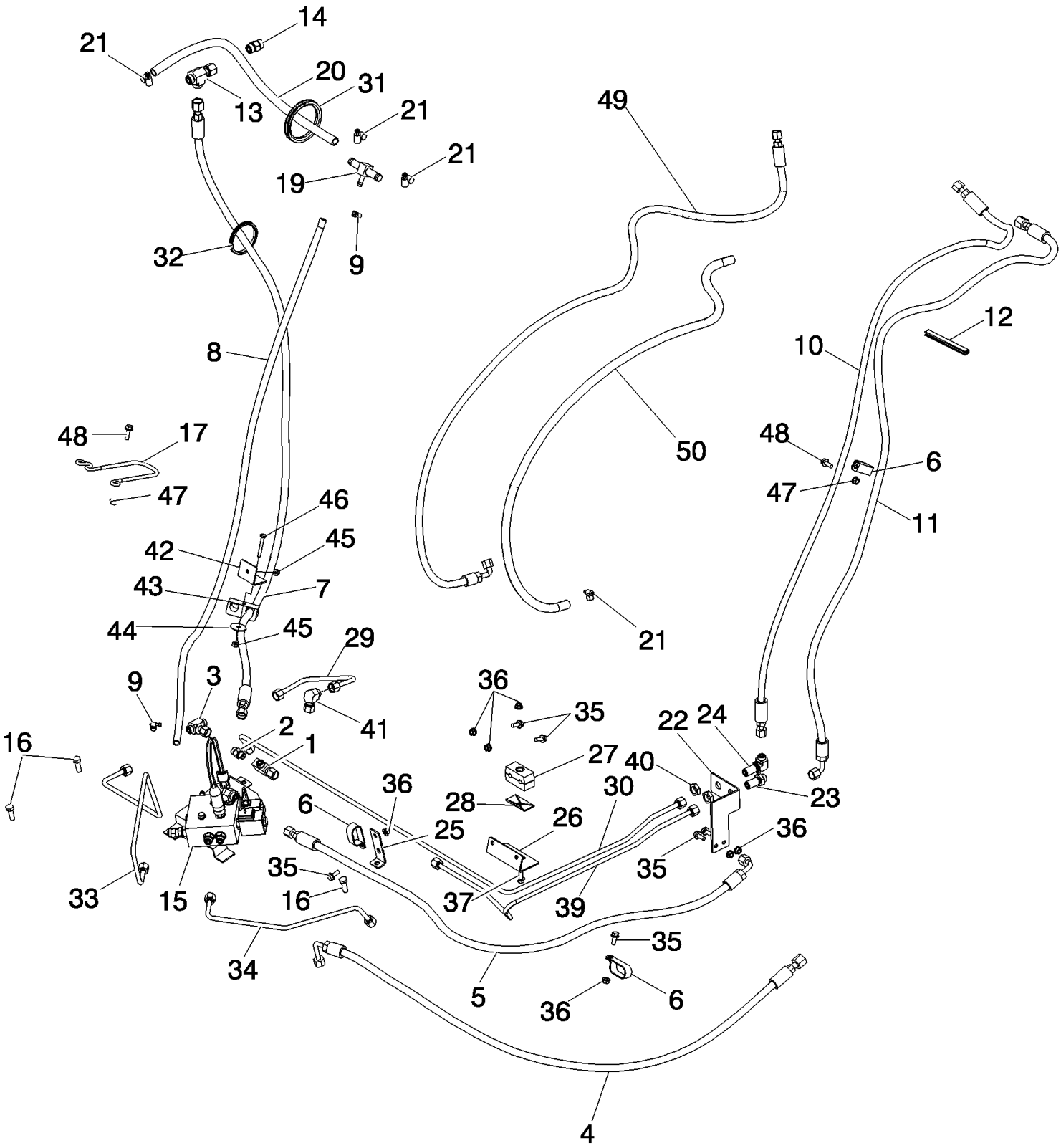

PDF created with pdfFactory trial version www.pdffactory.com

7088 AXIAL-FLOW COMBINE (EU) (4/08-)

07-02 HYDRAULICS, BRAKE, SERVICE AND PARK

ссылка	Номер детали	Кол-во	Описание
1	277963A1	1	FITTING, Tow Check
2	277961A1	1	VALVE, In-Line Check
3	201-434	1	TEE, 11/16"-18 ORFS x 11/16"-18 Sw Br,
4	87678372	1	HOSE ASSY., Feeder Clutch Cylinder Retract
5	87678374	1	HOSE ASSY., Feeder Clutch Cylinder Extend
6	470375C1	3	CLAMP,
7	87678375	1	HOSE ASSY., Park Brake and Feeder Clutch Valve Supply
8	87499929	1	HOSE, Park Brake Feeder Clutch Valve Return
9	214-1706	2	CLAMP, HOSE, #6, 0.44/0.78 Type M Worm,
10	87388122	1	HOSE ASSY., Service Brake, Top Left
11	87547954	1	HOSE ASSY., Right Service Brake
12	1545944C1	1	SEAL,
13	86624132	1	TEE, 13/16"-16 ORFS x 13/16"-16 Sw Run,
14	235705A1	1	VALVE, In-Line Check
15	NSS	1	NOT SERVICED SEPARATELY, VALVE ASSY, Park Brake, See Figure 07-03
16	614-10030	3	BOLT, Hex, M10 x 30, 8.8,
17	232707A1	1	GUIDE, Steering Hoses
19	177975A1	1	TEE, Low Pressure Return
20	87359779	1	HOSE, Park Brake Valve Return
21	214-1410	3	CLAMP, HOSE, #10, 0.56/1.06 Type F Worm,
22	87544715	1	SUPPORT, Brake Line Bulkhead
23	201-120	1	CONNECTOR, HYD., 11/16"-16, Blkhd, ORFS,
24	201-357	1	CONNECTOR, HYD., 90є, 11/16"-16, Blkhd, ORFS,
25	87385244	1	BRACKET, Harness Tube
26	87389849	1	SUPPORT ASSY., Brake Line
27	86988833	1	CLAMP,
28	1347127C1	1	PLATE, Hose Clamp
29	87726278	1	TUBE ASSY., Tow Check
30	87388134	1	TUBE ASSY., Service Brake Left
31	87416897	1	CONDUIT,
32	87582269	1	DUCT,
33	87678377	1	TUBE ASSY., Park Brake Left
34	87678376	1	TUBE ASSY., Park Brake Right
35	87656137	6	BOLT, Hex Flg, M8 x 20, 10.9, Full Thd,
36	86507066	7	NUT, M8 x 1.25, Flg, Cl 10,
37	87670761	1	BOLT,
39	87544714	1	TUBE ASSY., Service Brake Right
40	201-909	2	NUT, LOCK, Blkhd, 11/16"-16,
41	201-319	1	ELBOW, 90є, 11/16"-16 x 1/16"-16 Fem Sw ORFS,
42	84129335	1	BRACKET, Clamp
43	183826C1	1	CLAMP,

PDF created with pdfFactory trial version www.pdffactory.com

ссылка	Номер детали	Кол-во	Описание
44	495-81121	1	WASHER, .344" x 1 1/2" x .060",
45	231-5344	2	NUT, LOCK, Flg, 1/4"-20,
46	413-432	1	BOLT, Hex, 1/4"-20 x 2", G5,
47	86050279	3	NUT, M10 x 1.5, Flg, Cl 10,
48	87698837	3	BOLT,
49	84126064	1	HOSE ASSY., Brake Supply
50	NS	1	NOT SERVICED, HOSE, Drain, 1535 mm (60.5 in.), Cut From 87308316

PDF created with pdfFactory trial version www.pdffactory.com

07-03 VALVE ASSY, PARK BRAKE

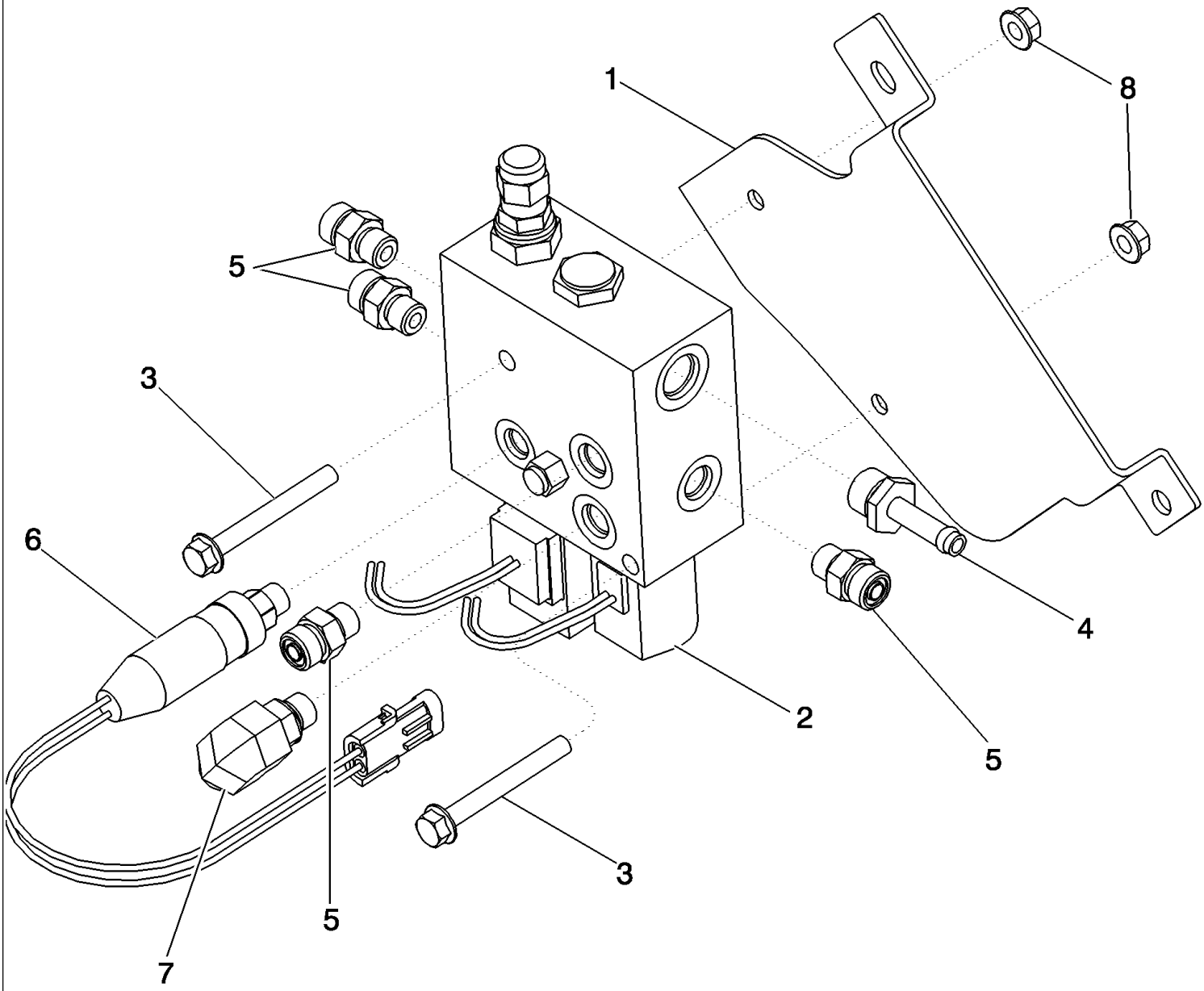

PDF created with pdfFactory trial version www.pdffactory.com

7088 AXIAL-FLOW COMBINE (EU) (4/08-)

07-03 VALVE ASSY, PARK BRAKE

ссылка	Номер детали	Кол-во	Описание
1	87678379	1	SUPPORT, Brake Valve
2	129010A4	1	VALVE, CONTROL, Feeder and Park Brake
3	87656138	2	BOLT,
4	217-386	1	FITTING, 3/8" Hose x 3/4"-18 ORB, Beaded,
5	201-101	4	CONNECTOR, HYD., 11/16"-16 ORFS x 9/16"-18 ORB,
6	125829A1	1	SWITCH, Pressure
7	201-304	1	ELBOW, 90є, 11/16"-16 x 9/16"-18 Adj, ORFS,
8	86507066	2	NUT, M8 x 1.25, Flg, Cl 10,

PDF created with pdfFactory trial version www.pdffactory.com

07-04 BRAKES, MASTER

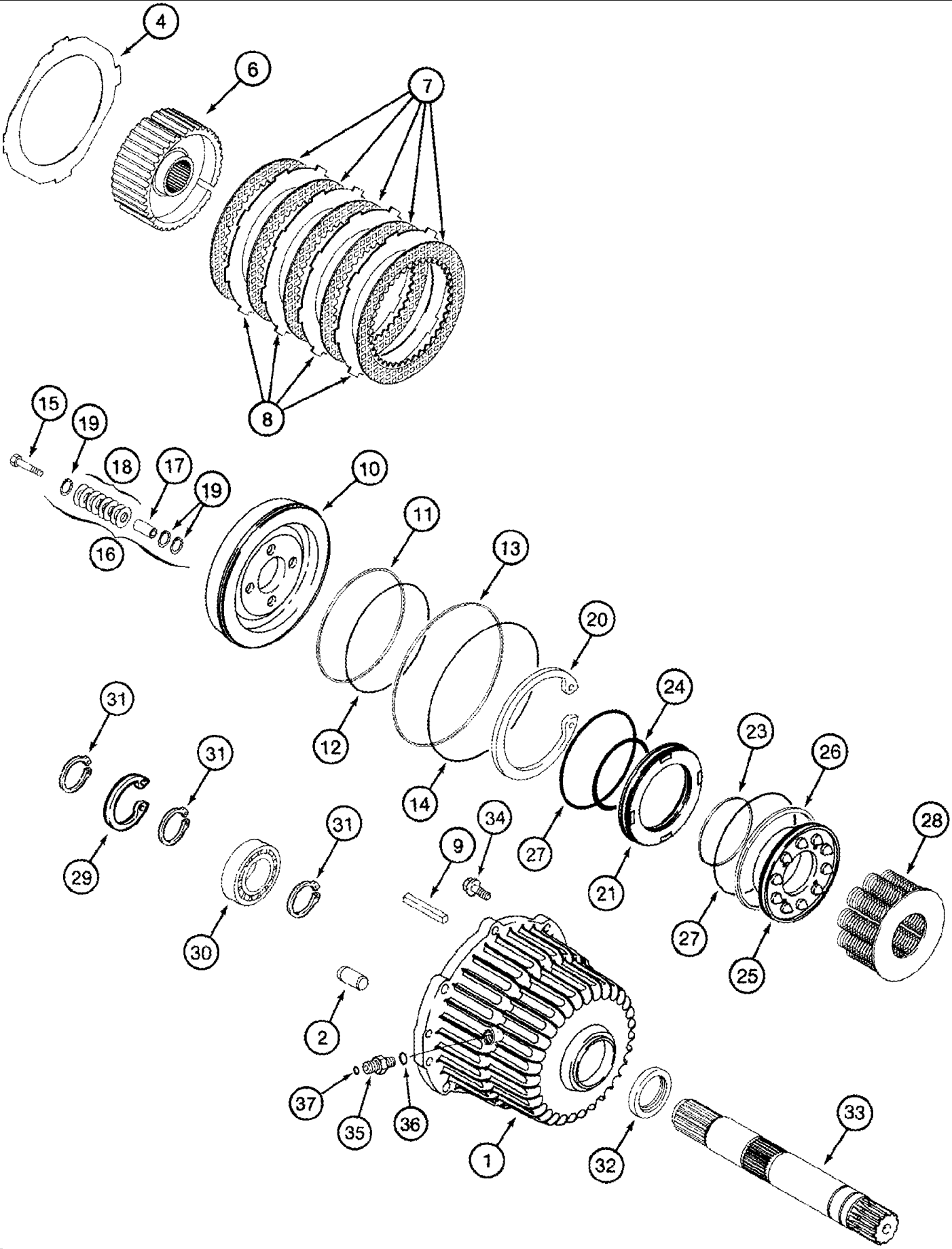

PDF created with pdfFactory trial version www.pdffactory.com

7088 AXIAL-FLOW COMBINE (EU) (4/08-)

07-04 BRAKES, MASTER

ссылка	Номер детали	Кол-во	Описание
	236388A1R	2	BRAKE ASSY., Remanufactured, N.A. Only
	236388A1C	2	CORE, Use To Return For Credit
	236388A1	2	BRAKE ASSY., Inc. 1 - 37, Master
1	1997395C1	1	HOUSING, Brake
2	837-16030	2	DOWEL, M16 x 30,
4	NSS	2	NOT SERVICED SEPARATELY, SHIM, 0.53 mm Thk
4	NSS	2	NOT SERVICED SEPARATELY, SHIM, 1.062 mm Thk
6	1997394C1	1	HUB, Brake
7	1997959C1	12	BRAKE DISC,
8	1285974C1	13	PLATE, BRAKE,
9	221254A1	8	SPACER,
10	1997398C1	1	PISTON, Service Brake
11	1997617C4	1	SEAL,
12	238-7168	1	O-RING, -168, Cl 7, 7.237" ID x .103" Thk,
13	1997616C4	1	SEAL, Piston
14	238-7174	1	O-RING, -174, Cl 7, 8.737" ID x .103" Thk,
15	828-8070	4	BOLT, Hex, M8 x 70, 10.9,
16	1997900C1	4	SPRING, Inc. 17 - 19
17	NSS	1	NOT SERVICED SEPARATELY, SPACER
18	1997912C1	8	WASHER,
19	100-1462	3	RING, SNAP, #62, Ext,
20	102-22625	1	RING, SNAP, #625, 6.474", Int, Spiral,
21	1997399C1	1	PISTON, Reaction
23	1997619C4	1	RING, PISTON,
24	238-7157	1	O-RING, -157, Cl 7, 4.487" ID x .103" Thk,
25	1997400C1	1	PISTON, Park Brake
26	1997618C4	1	SEAL, Piston Outer
27	238-7162	2	O-RING, -162, Cl 7, 5.737" ID x .103" Thk,
28	1997999C2	1	SPRING,
29	101-21393	1	RING, SNAP, #393, 4.234", Int,
30	A21266	1	BEARING, PTO Clutch Spider
31	358059R1	3	RING, SNAP,
32	184072C1	1	SEAL, Brake Housing Oil
33	236378A1	1	SHAFT, Output
34	845-8020	4	BOLT, Hex Flg, M8 x 20, 8.8, Full Thd,
35	201-101	2	CONNECTOR, HYD., 11/16"-16 ORFS x 9/16"-18 ORB, Incl. 36, 37
36	237-6006	1	O-RING, 6-1, 90 Duro, .468" ID x .078" Thk,
37	238-6012	1	O-RING, -012, 90 Duro, .364" ID x .070" Thk,
	221598A1	2	KIT, SHIM, Inc. 4, 4, 9

PDF created with pdfFactory trial version www.pdffactory.com

07-05 VALVE ASSEMBLY - BRAKES, MASTER

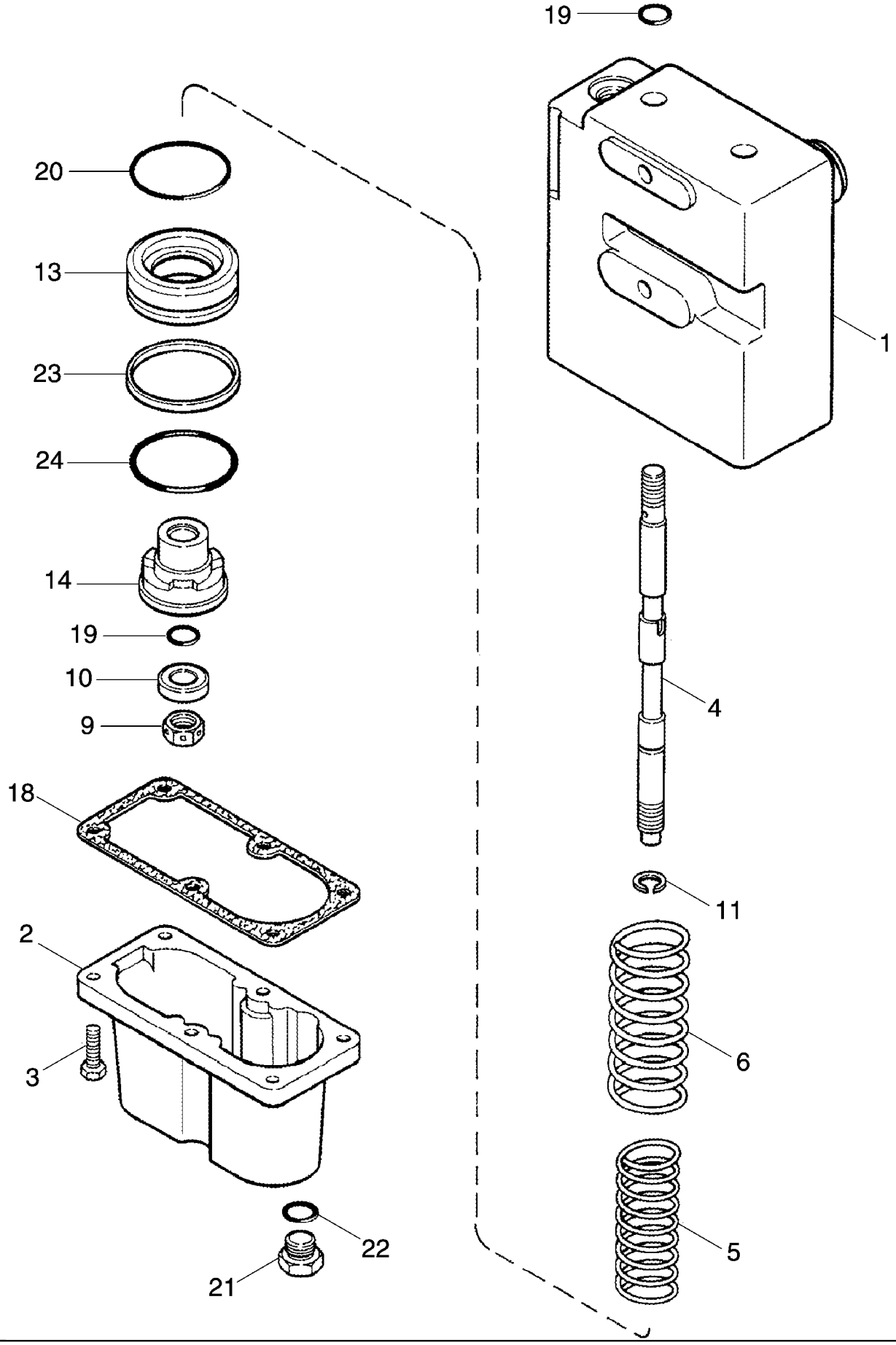

PDF created with pdfFactory trial version www.pdffactory.com

7088 AXIAL-FLOW COMBINE (EU) (4/08-)

07-05 VALVE ASSEMBLY - BRAKES, MASTER

ссылка	Номер детали	Кол-во	Описание
	137449A2	1	VALVE, BRAKE, Inc. 1 - 24, Master Control
1	NSS	1	NOT SERVICED SEPARATELY, BODY
2	384495R1	1	CAP,
3	13-414	6	BOLT, Hex, 1/4"-20 x 7/8", G5, Full Thd,
4	NSS	2	NOT SERVICED SEPARATELY, SPOOL
5	1263125C1	2	SPRING,
6	1263124C1	2	SPRING,
9	232-4638	2	NUT, LOCK, 1/2"-20, GC,
10	69158C1	2	RETAINER,
11	A27020	2	RING,
13	NSS	2	NOT SERVICED SEPARATELY, PISTON
14	NSS	2	NOT SERVICED SEPARATELY, PISTON
	71487C92	1	KIT, SEALS, Inc. 18 - 25
18	384503R2	1	GASKET,
19	399906R1	4	O-RING,
20	399907R1	2	O-RING,
21	9410358	1	PLUG,
22	237-6006	1	O-RING, 6-1, 90 Duro, .468" ID x .078" Thk,
23	1986769C1	2	BACK-UP RING,
24	238-5135	2	O-RING, -135, 70 Duro, 1.925" ID x .103" Thk,
25	70340C1	2	O-RING, (Not Shown)

PDF created with pdfFactory trial version www.pdffactory.com

08-01 RESERVOIR - OIL, HYDRAULIC

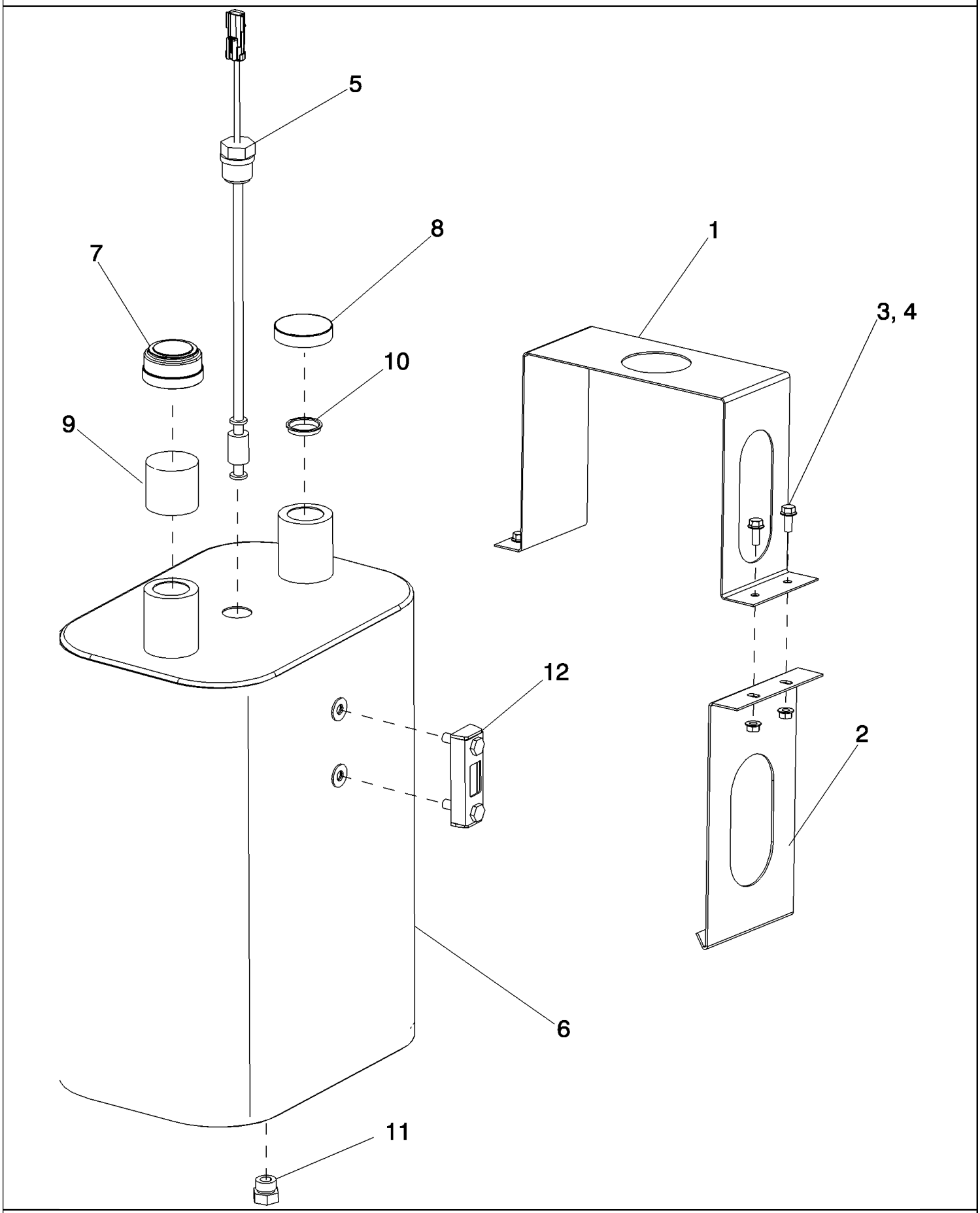

PDF created with pdfFactory trial version www.pdffactory.com

7088 AXIAL-FLOW COMBINE (EU) (4/08-)

08-01 RESERVOIR - OIL, HYDRAULIC

ссылка	Номер детали	Кол-во	Описание
1	87634141	1	BRACKET, Reservoir
2	87634139	2	BRACKET, Reservoir
3	86507066	4	NUT, M8 x 1.25, Flg, Cl 10,
4	87030775	4	BOLT, Hex Flg, M8 x 30, 10.9, Full Thd,
5	87602126	1	SWITCH, Hydraulic Level
6	87602202	1	RESERVOIR ASSY., Hydraulic, Inc. 7 - 12
7	1272941C2	1	BREATHER, Cap
8	1346309C2	1	CAP, FILLER, Non-Vented
9	191116A1	1	BAFFLE, Fill Neck
10	104407A1	1	SCREEN, Reservoir Fill
11	218-5156	1	PLUG, Hex Hd, 3/4"-16 ORB,
12	87107405	1	GAUGE, LEVEL, Reservoir

PDF created with pdfFactory trial version www.pdffactory.com

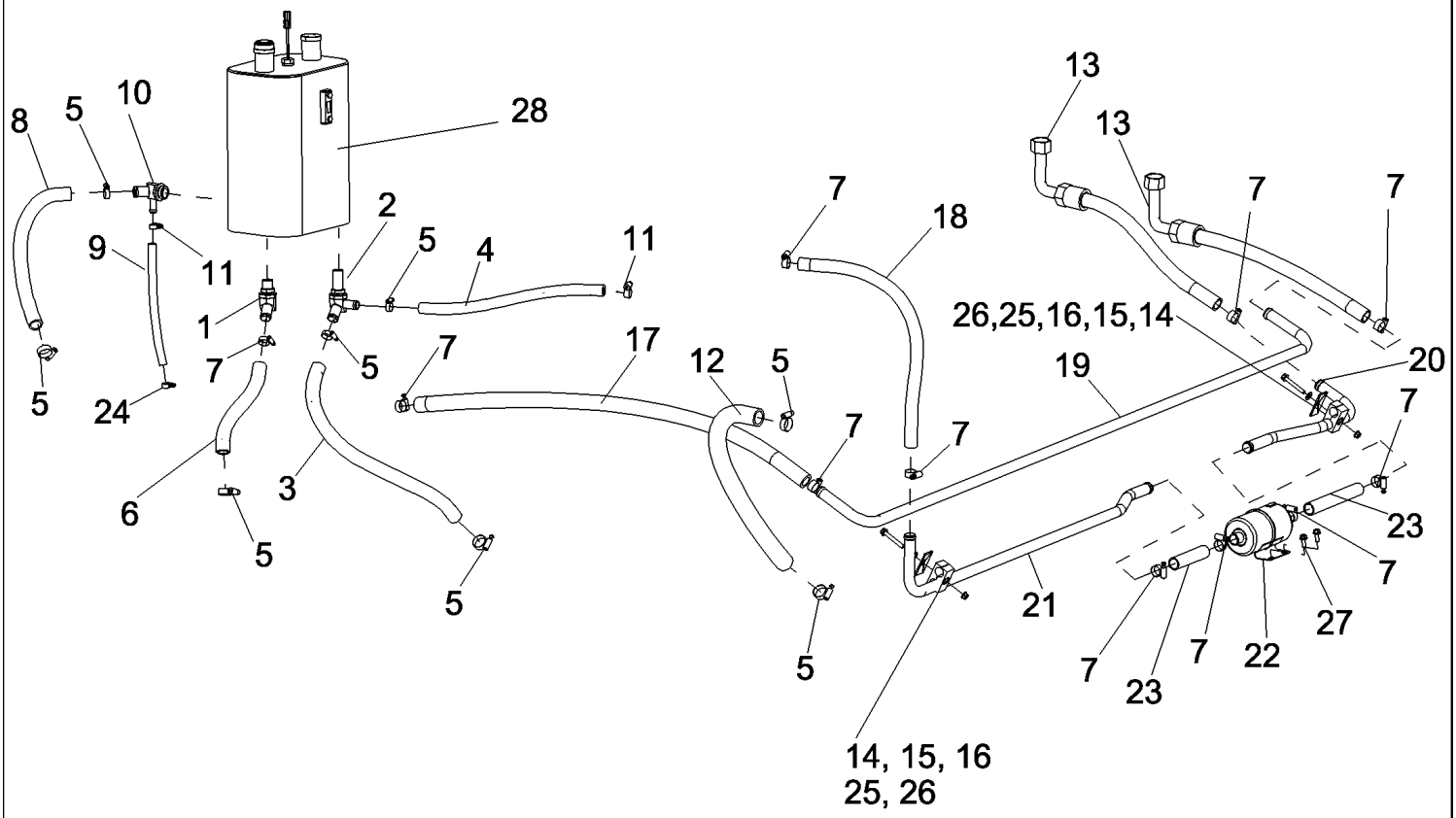

PDF created with pdfFactory trial version www.pdffactory.com

7088 AXIAL-FLOW COMBINE (EU) (4/08-)

08-02 HYDRAULICS - COOLER/LOW PRESSURE CIRCUIT

ссылка	Номер детали	Кол-во	Описание
1	182811A1	1	ELBOW, Pump Suction in Reservoir
2	182812A1	1	TEE, Charge Pump/Cooler Bypass
3	1541691C1	1	HOSE, FLEXIBLE, Hydraulic
4	87575904	1	HOSE, Hydraulic
5	214-3232	8	CLAMP, HOSE, 1.25/2.125 HD Worm, W/liner,
6	NSS	1	NOT SERVICED SEPARATELY, HOSE, Hydraulic, 715 mm (28.1 in.), Cut From B90928
7	214-3228	11	CLAMP, HOSE, 1.00/1.875 HD Worm, W/liner,
8	NSS	1	NOT SERVICED SEPARATELY, HOSE, Hydraulic, 700 mm (27.6 in.), Cut From 1541953C1
9	87591072	1	HOSE, Hydraulic
10	87591032	1	ORIFICE,
11	214-1516	2	CLAMP, HOSE, #16, .81/1.50 Type F Worm, W/liner,
12	1541691C1	1	HOSE, FLEXIBLE, Charge Pump Suction
13	84126917	2	HOSE ASSY., Cooler Return
14	1347071C1	2	CLAMP,
15	1347127C1	2	PLATE, Hose Clamp
16	495-11041	2	WASHER, 3/8", SAE,
17	87684755	1	HOSE, Cooler Return
18	87634668	1	HOSE, Cooler Return
19	87559991	1	TUBE, Cooler Supply
20	87684757	1	TUBE ASSY., Cooler Return
21	87684756	1	TUBE ASSY., Cooler Return
22	87684758	1	SCREEN, Return
23	87436551	2	HOSE, Cooler Return
24	87016721	1	CLAMP, HOSE, #12, .69/1.25 Type F Worm, W/liner,
25	87670761	2	BOLT,
26	86507066	2	NUT, M8 x 1.25, Flg, Cl 10,
27	87656137	2	BOLT, Hex Flg, M8 x 20, 10.9, Full Thd,
28	REF	1	INSTRUCTION, RESERVOIR, Hydraulic, See Figure 08-01

PDF created with pdfFactory trial version www.pdffactory.com

08-03 HYDRAULIC PLUMBING, TUBE BUNDLE MOUNT

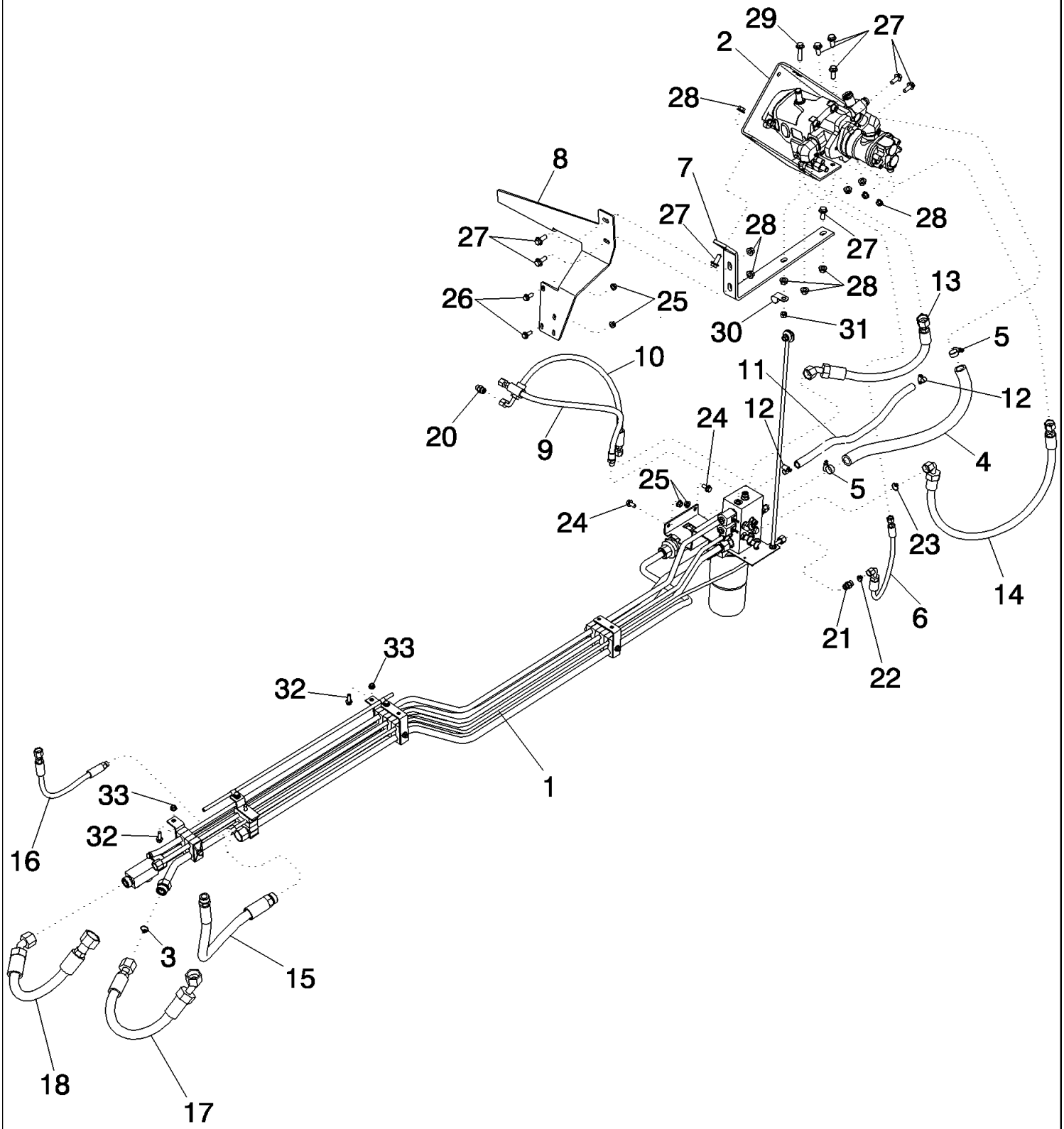

PDF created with pdfFactory trial version www.pdffactory.com

7088 AXIAL-FLOW COMBINE (EU) (4/08-)

08-03 HYDRAULIC PLUMBING, TUBE BUNDLE MOUNT

ссылка	Номер детали	Кол-во	Описание
1	NS	1	NOT SERVICED, TUBE BUNDLE ASSY, See Figure 08-04
2	NS	1	NOT SERVICED, AUXILIARY PUMP ASSY, See Figure 08-08
3	238-6018	1	O-RING, -018, 90 Duro, .739" ID x .070" Thk,
4	87634668	1	HOSE, Return Filter to Pump
5	214-3228	2	CLAMP, HOSE, 1.00/1.875 HD Worm, W/liner,
6	87575952	1	HOSE ASSY., Signal Pump to Tube
7	87393643	1	STRAP, Auxiliary Pump Bracket
8	87562445	1	BRACKET, Auxiliary Pump Support, Front
9	128068A2	1	HOSE, FLEXIBLE, Unloader Clutch Valve Supply
10	87558237	1	HOSE ASSY., Unloader Clutch Valve Supply
11	87359779	1	HOSE, Valve Drain
12	214-1410	2	CLAMP, HOSE, #10, 0.56/1.06 Type F Worm,
13	87634086	1	HOSE ASSY., FLP to Filter
14	87575950	1	HOSE ASSY., Reel Drive Supply
15	87549518	1	HOSE ASSY., Feeder Lift Supply to Valve
16	84126047	1	HOSE ASSY., Pump Signal Tube to Valve Stack
17	87701899	1	HOSE ASSY., Reel Drive Valve Supply
18	87549521	1	HOSE ASSY., Valve Stack Return
20	9993143	1	CONNECTOR, HYD., 11/16"-16 ORFS x 9/16"-18 ORB,
21	201-160	1	UNION,
22	238-6012	2	O-RING, -012, 90 Duro, .364" ID x .070" Thk,
23	238-6016	1	O-RING, -016, 90 Duro, .614" ID x .070" Thk,
24	87698835	2	BOLT,
25	86050279	4	NUT, M10 x 1.5, Flg, Cl 10,
26	87698838	2	BOLT,
27	87030508	9	BOLT, Hex Flg, M12 x 30, 10.9, Full Thd,
28	86512497	10	NUT, M12 x 1.75, Flg, Cl 10,
29	87670764	1	BOLT,
30	515-25254	1	CLAMP, 1", Insul, 1/2" Bolt,
31	9803187	1	NUT, 1/2"-13, G8,
32	87698833	2	BOLT,
33	86507066	2	NUT, M8 x 1.25, Flg, Cl 10,

PDF created with pdfFactory trial version www.pdffactory.com

08-04 HYDRAULIC PLUMBING, TUBE BUNDLE ASSY

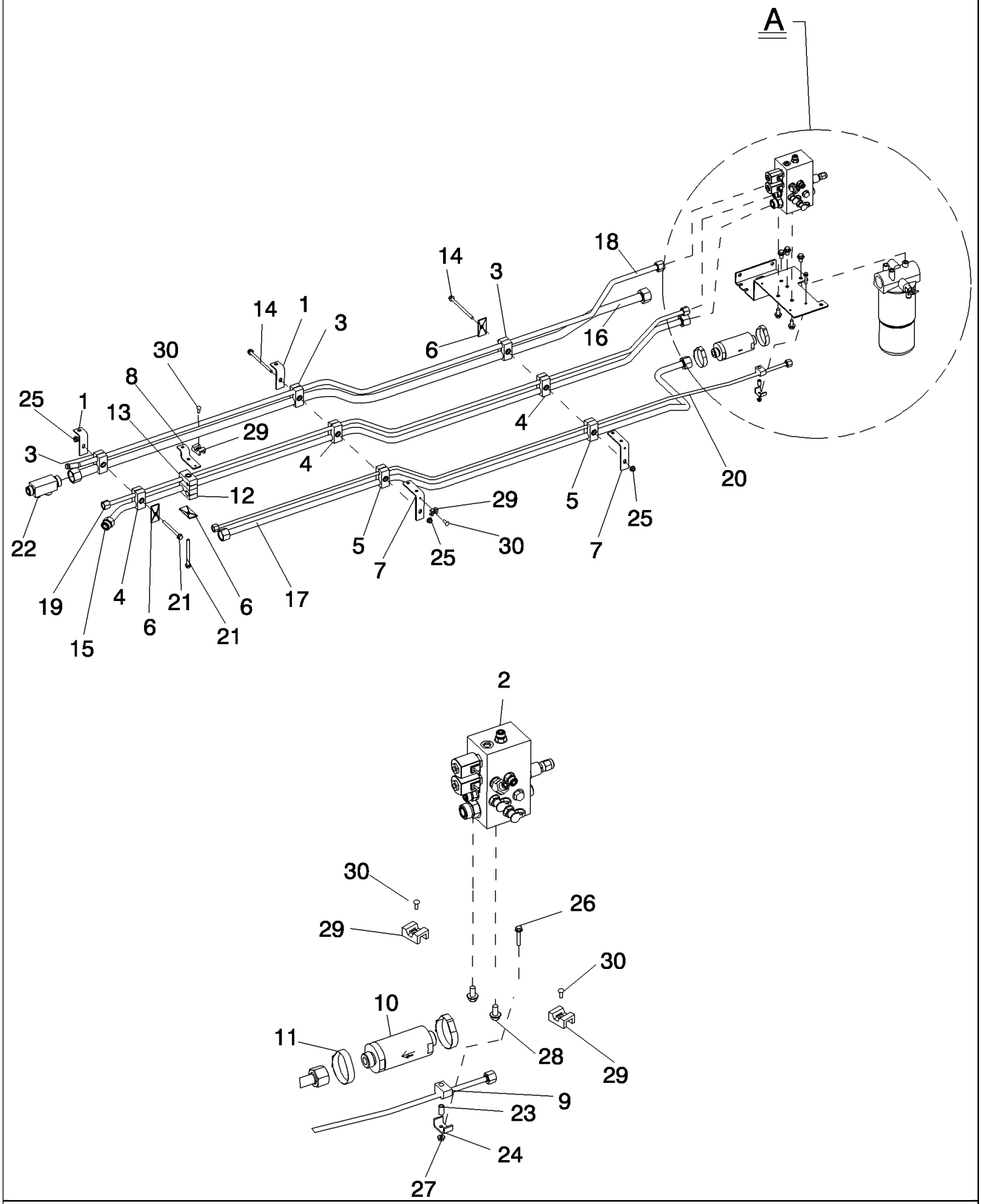

PDF created with pdfFactory trial version www.pdffactory.com

7088 AXIAL-FLOW COMBINE (EU) (4/08-)

08-04 HYDRAULIC PLUMBING, TUBE BUNDLE ASSY

ссылка	Номер детали	Кол-во	Описание
1	87549264	2	SUPPORT, Tube Bundle Center
2	NSS	1	NOT SERVICED SEPARATELY, VALVE, Separator/Unloader/Regulator, See Figure 08-05
3	87000138	3	CLAMP,
4	87000153	3	CLAMP,
5	87000154	2	CLAMP,
6	1347127C1	3	PLATE, Hose Clamp
7	84126046	2	BRACKET, Tube Support
8	87683598	1	BRACKET, Tube Support
9	449127A1	1	CLAMP,
10	86525899	1	FILTER ASSY.,
11	82012728	2	CLAMP, HOSE,
12	87000140	1	CLAMP,
13	87105732	1	CLAMP,
14	87681208	2	NUT,
15	87544320	1	TUBE ASSY., Reel Drive Supply
16	87544319	1	TUBE ASSY., System Return
17	87544318	1	TUBE ASSY., Header Lift Supply
18	87544317	1	TUBE ASSY., Low Pressure Return
19	87544314	1	TUBE ASSY., Regulated Pressure
20	87544313	1	TUBE ASSY., Pump Signal
21	87301686	2	BOLT,
22	87350080	1	CONNECTOR, HYD.,
23	418785A1	1	SPACER, Tube Clamp
24	449128A1	1	PLATE, Tube Clamp
25	86507066	3	NUT, M8 x 1.25, Flg, Cl 10,
26	87656137	2	BOLT, Hex Flg, M8 x 20, 10.9, Full Thd,
27	857-6035	1	BOLT,
28	515-2295	2	CLAMP, 3/8", Insul, 5/16" Bolt,
29	86050300	1	NUT, M6 x 1, Flg, Cl10,
30	87021006	2	BOLT, Hex Flg, M10 x 16, 10.9, Full Thd,
31	86590413	2	CLAMP,
32	445394	2	RIVET, Pop, M4.8 x 12.7,
33	87683599	1	TUBE, Harness Support

PDF created with pdfFactory trial version www.pdffactory.com

08-05 VALVE, SEPARATOR/UNLOADER/REGULATOR

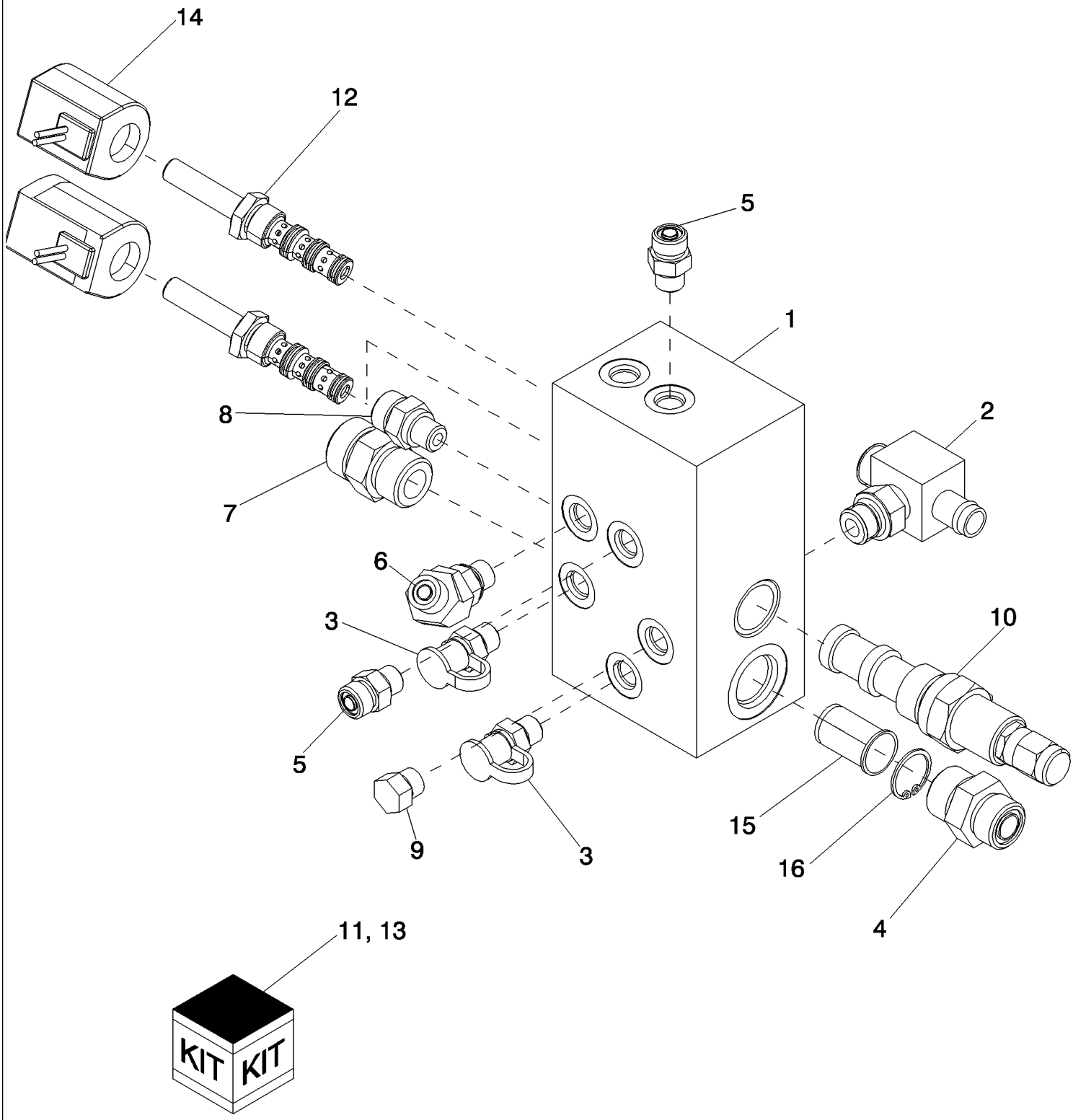

PDF created with pdfFactory trial version www.pdffactory.com

7088 AXIAL-FLOW COMBINE (EU) (4/08-)

08-05 VALVE, SEPARATOR/UNLOADER/REGULATOR

ссылка	Номер детали	Кол-во	Описание
1	84129051	1	VALVE, Separator/Unloader/Regulator, Inc. 10 - 16
2	141657A1	1	TEE,
3	1541849C1	2	COUPLING, Diagnostic
4	201-131	1	CONNECTOR, HYD., 1"-12 ORFS x 9/16"-18 ORB,
5	201-101	2	CONNECTOR, HYD., 11/16"-16 ORFS x 9/16"-18 ORB,
6	201-315	1	ELBOW, 45є, 11/16"-16 x 9/16"-18. Adj, ORFS,
7	201-104	1	CONNECTOR, HYD., 1 3/16"-12 ORFS x 1 1/16"-12 ORB,
8	201-126	1	CONNECTOR, HYD., 13/16"-16 ORFS x 9/16"-20 ORB,
9	218-5155	1	PLUG, Hex Hd, 9/16"-18 ORB,
10	377593A1	1	VALVE, PRESSURE RELIEF,
11	190709A1	1	KIT, SEALS, Valve Cartridge
12	187849C1	2	VALVE, SOLENOID,
13	187850C1	2	KIT, SEALS,
14	1340843C1	2	COIL, 12V
15	241892A1	1	SCREEN, FILTER,
16	100-2187	1	RING, SNAP, 0.875", Int, #87,

PDF created with pdfFactory trial version www.pdffactory.com

08-06 FILTER ASSEMBLY - OIL, RETURN - RETURN FILTER MOUNTING

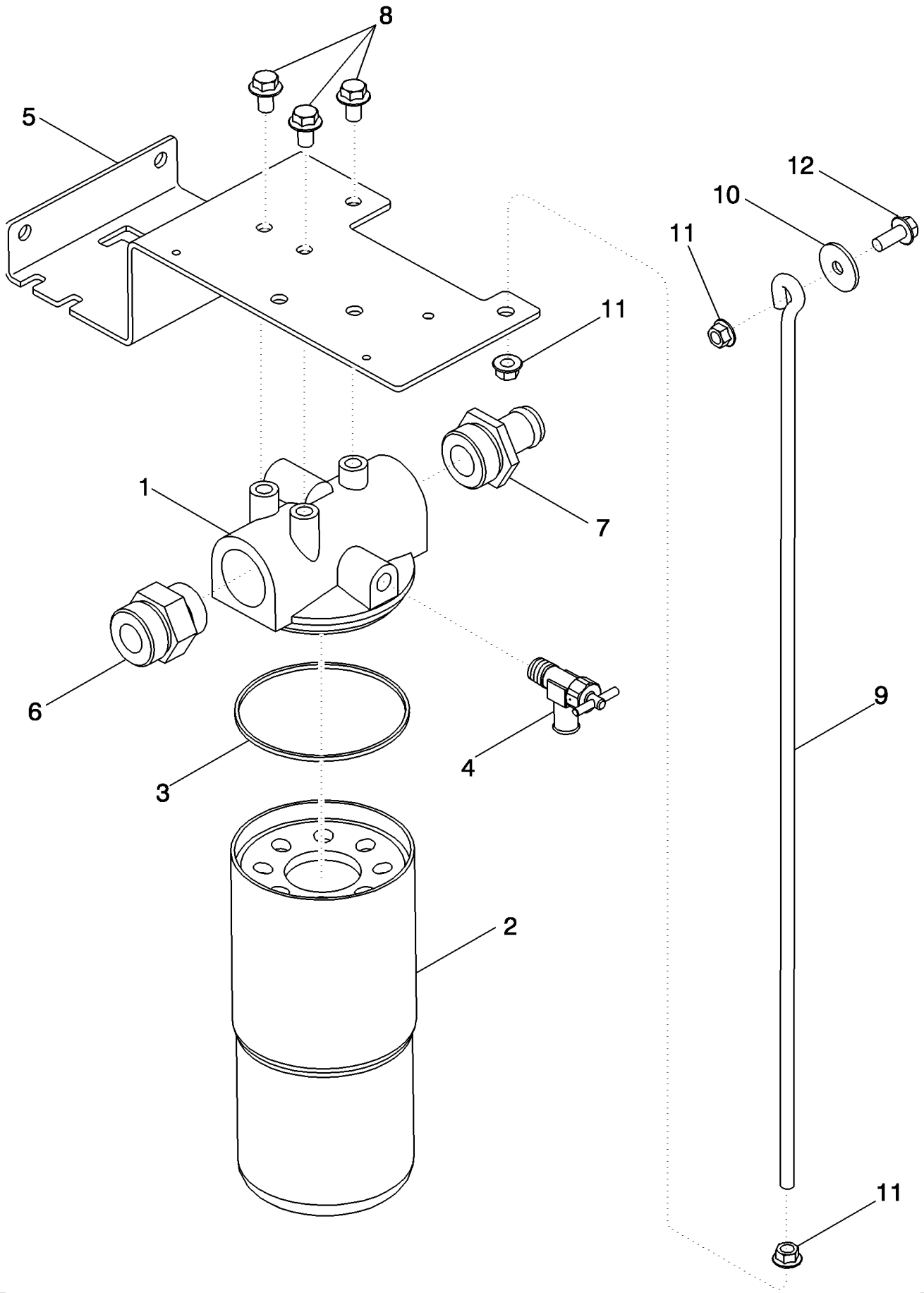

PDF created with pdfFactory trial version www.pdffactory.com

7088 AXIAL-FLOW COMBINE (EU) (4/08-)

08-06 FILTER ASSEMBLY - OIL, RETURN - RETURN FILTER MOUNTING

ссылка	Номер детали	Кол-во	Описание
	87689482	1	FILTER ASSY., Return With Drain Valve, Inc. 1 - 4
1	NSS	1	NOT SERVICED SEPARATELY, HEAD
2	A177605	1	FILTER, HYDRAULIC OIL,
3	93196C1	1	O-RING,
4	301803R1	1	VALVE, SHUT-OFF,
5	87683601	1	BRACKET, Return Filter
6	9847247	1	CONNECTOR, HYD., 1 7/16"-12 ORFS x 1 5/8"-12 ORB,
7	217-173	1	FITTING, 1" Hose x 1 5/8"-12 ORB, Beaded,
8	87021006	3	BOLT, Hex Flg, M10 x 16, 10.9, Full Thd,
9	87634005	1	ROD, Return Filter Bracket
10	495-81143	1	WASHER, 13/32" x 1 1/2" x .120",
11	86050279	3	NUT, M10 x 1.5, Flg, Cl 10,
12	857-10025	1	BOLT, Hex Flg, M10 x 25, 10.9, Full Thd,

PDF created with pdfFactory trial version www.pdffactory.com

08-07 FILTER ASSEMBLY - CHARGE PUMP AND MOUNTING

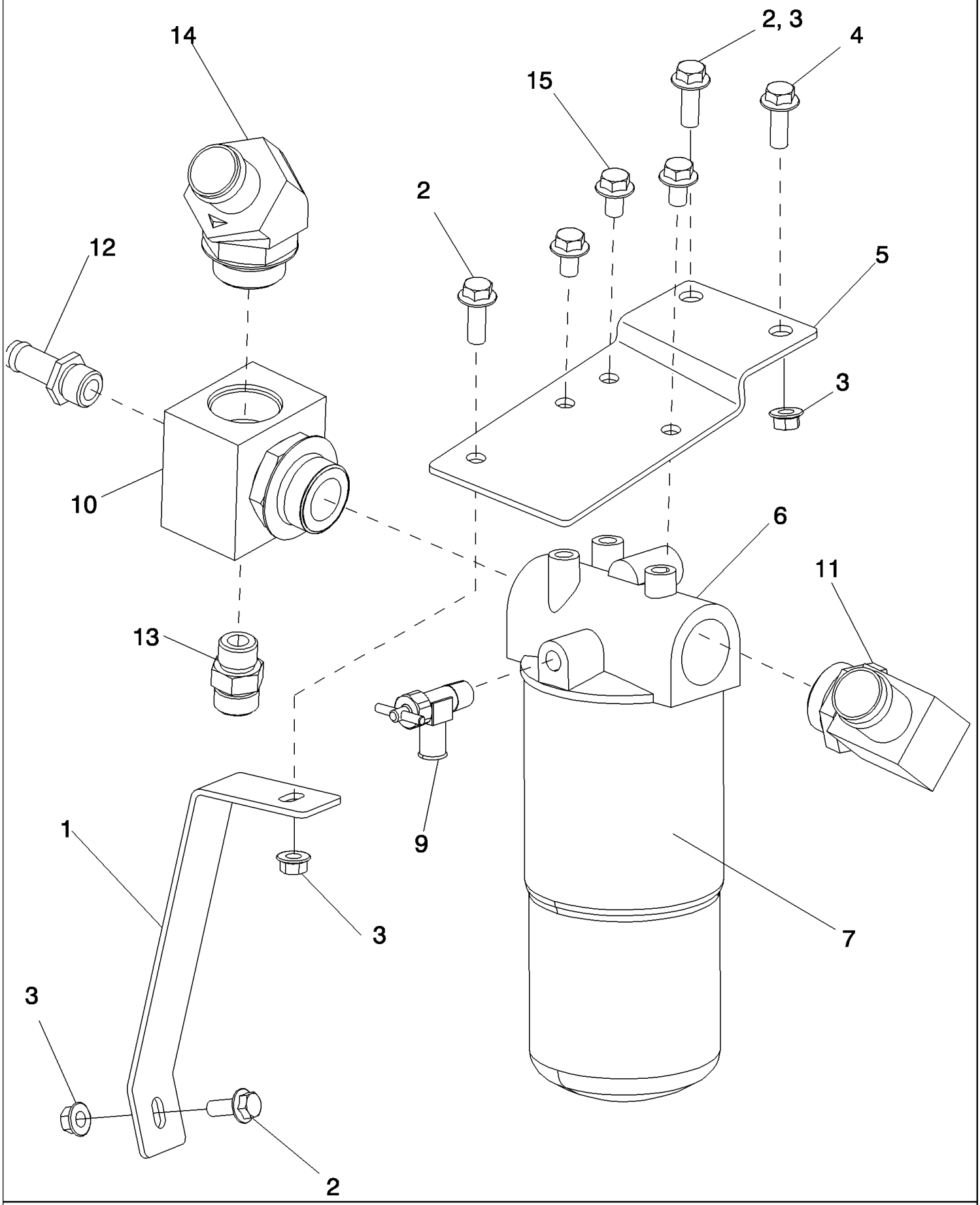

PDF created with pdfFactory trial version www.pdffactory.com

7088 AXIAL-FLOW COMBINE (EU) (4/08-)

08-07 FILTER ASSEMBLY - CHARGE PUMP AND MOUNTING

ссылка	Номер детали	Кол-во	Описание
1	87751602	1	STRAP, Filter Bracket Support
2	86705429	3	BOLT,
3	86050279	4	NUT, M10 x 1.5, Flg, Cl 10,
4	87698837	1	BOLT,
5	87368138	1	SUPPORT, Charge Filter
	87689482	1	FILTER ASSY., Return With Drain Valve, Inc. 6 - 9
6	NSS	1	NOT SERVICED SEPARATELY, HEAD
7	A177605	1	FILTER, HYDRAULIC OIL,
8	93196C1	1	O-RING,
9	301803R1	1	VALVE, SHUT-OFF,
10	87674223	1	FITTING, Charge Pump Filter
11	217-355	1	FITTING, 90є, 1 1/4" Hose x 1 5/8"-12 ORB Beaded,
12	217-175	1	FITTING, 5/8" Hose x 7/8"-14 ORB, Beaded,
13	201-103	1	CONNECTOR, HYD., 1"-14 ORFS x 7/8"-14 ORB,
14	217-317	1	FITTING, 45є, 1 1/4" Hose x 1 5/8"-12 ORB Beaded,
15	87021006	3	BOLT, Hex Flg, M10 x 16, 10.9, Full Thd,

PDF created with pdfFactory trial version www.pdffactory.com

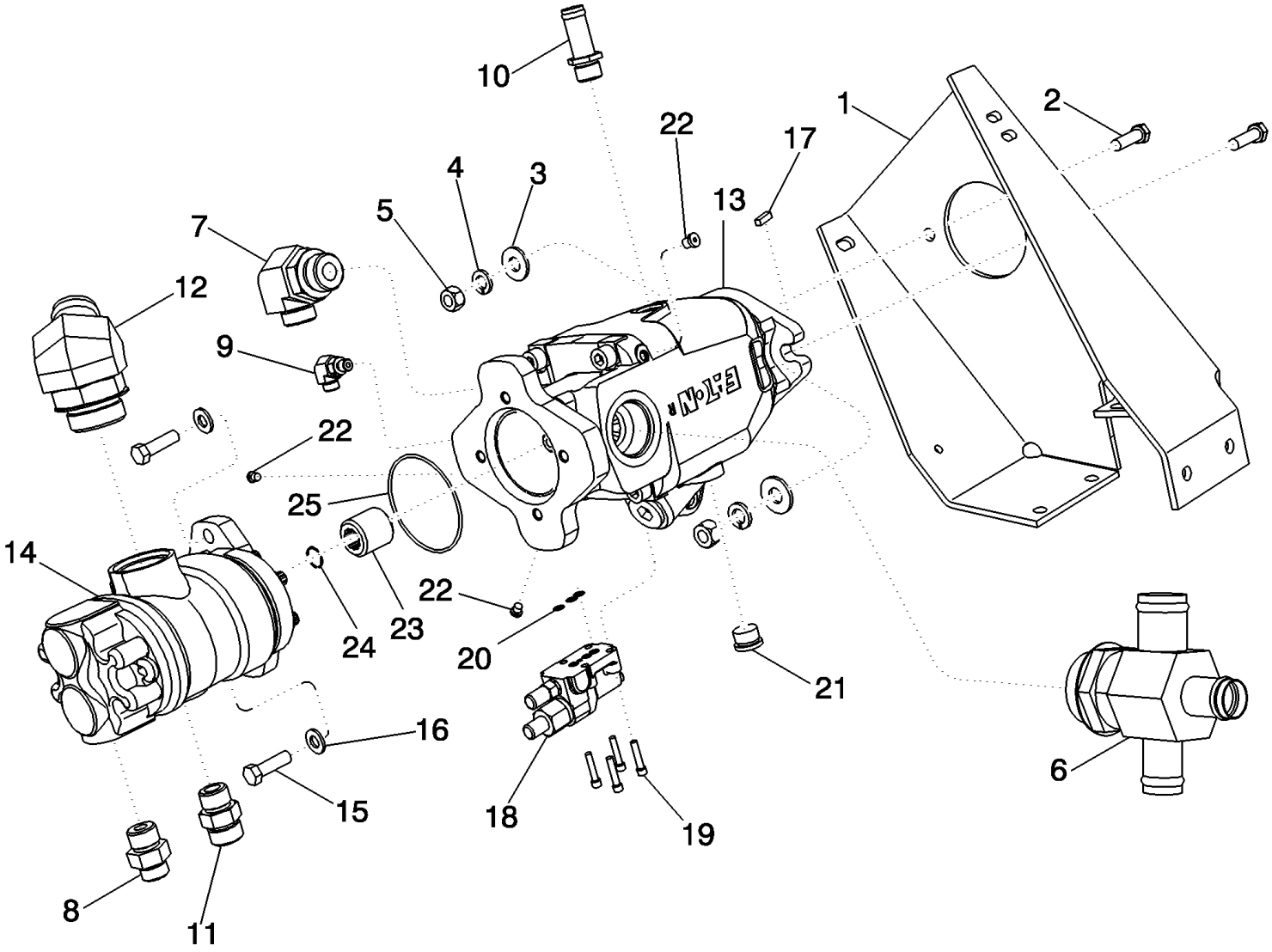

PDF created with pdfFactory trial version www.pdffactory.com

7088 AXIAL-FLOW COMBINE (EU) (4/08-)

08-08 PUMP, AUXILIARY - MOUNTING

ссылка	Номер детали	Кол-во	Описание
1	87393642	1	SUPPORT, Hydraulic Pump
2	413-828	2	BOLT, Hex, 1/2"-13 x 1 3/4", G5,
3	495-81287	2	WASHER, 17/32" x 1 1/4" x .120",
4	492-11050	2	WASHER, LOCK, 1/2",
5	425-108	2	NUT, 1/2"-13, G5,
6	87383863	1	Piston Pump Suction
7	87326965	1	ELBOW,
8	201-112	1	CONNECTOR, HYD., 13/16"-16 ORFS x 7/8"-14 ORB,
9	201-303	1	ELBOW, 90є, 9/16"-18 x 7/16"-20 Adj, ORFS,
10	217-398	1	FITTING, 3/4" Hose x 7/8"-14 ORB, Beaded,
11	201-103	1	CONNECTOR, HYD., 1"-14 ORFS x 7/8"-14 ORB,
12	87599598	1	CONNECTOR, HYD.,
13	87534721	1	PUMP, Auxiliary, Inc. 17 - 25, and Seal Kit 87585824
	87585824	1	SEAL, Auxiliary Pump
14	87573957	1	PUMP, Reel Drive/Rotary Screen, Inc. Kit 291744A1
	291744A1	1	KIT, SEALS, Reel Drive/Rotary Screen Pump
15	88011	2	BOLT, Hex, 3/8"-16 x 1 1/4", G5, Full Thd,
16	87016	2	WASHER, 3/8", SAE,
17	452779R1	1	KEY, 1/4" Sq x 3/4", Par,
18	87585825	1	COMPENSATOR, Compensator, Inc. 19, 20, and Kit 87585826
	87585826	1	SEAL, Seal, Compensator
19	86512871	4	SCREW, Hex Soc Hd, 1/4"-28 x 1 1/4",
20	86512844	1	O-RING, -010, 90 Duro, .239" ID x .070" Thk,
21	86625138	1	PLUG, Hex Soc, 7/8"-14 ORB,
22	86632547	3	PLUG, Hex Soc, 5/16"-24 ORB,
23	86566800	1	COUPLING, 11 Tooth
24	87585828	1	RING, SNAP, Coupler
25	238-6042	1	O-RING, -042, 90 Duro, 3.239" ID x .070" Thk,

PDF created with pdfFactory trial version www.pdffactory.com

08-09 PUMP AUXILIARY, BELT DRIVE

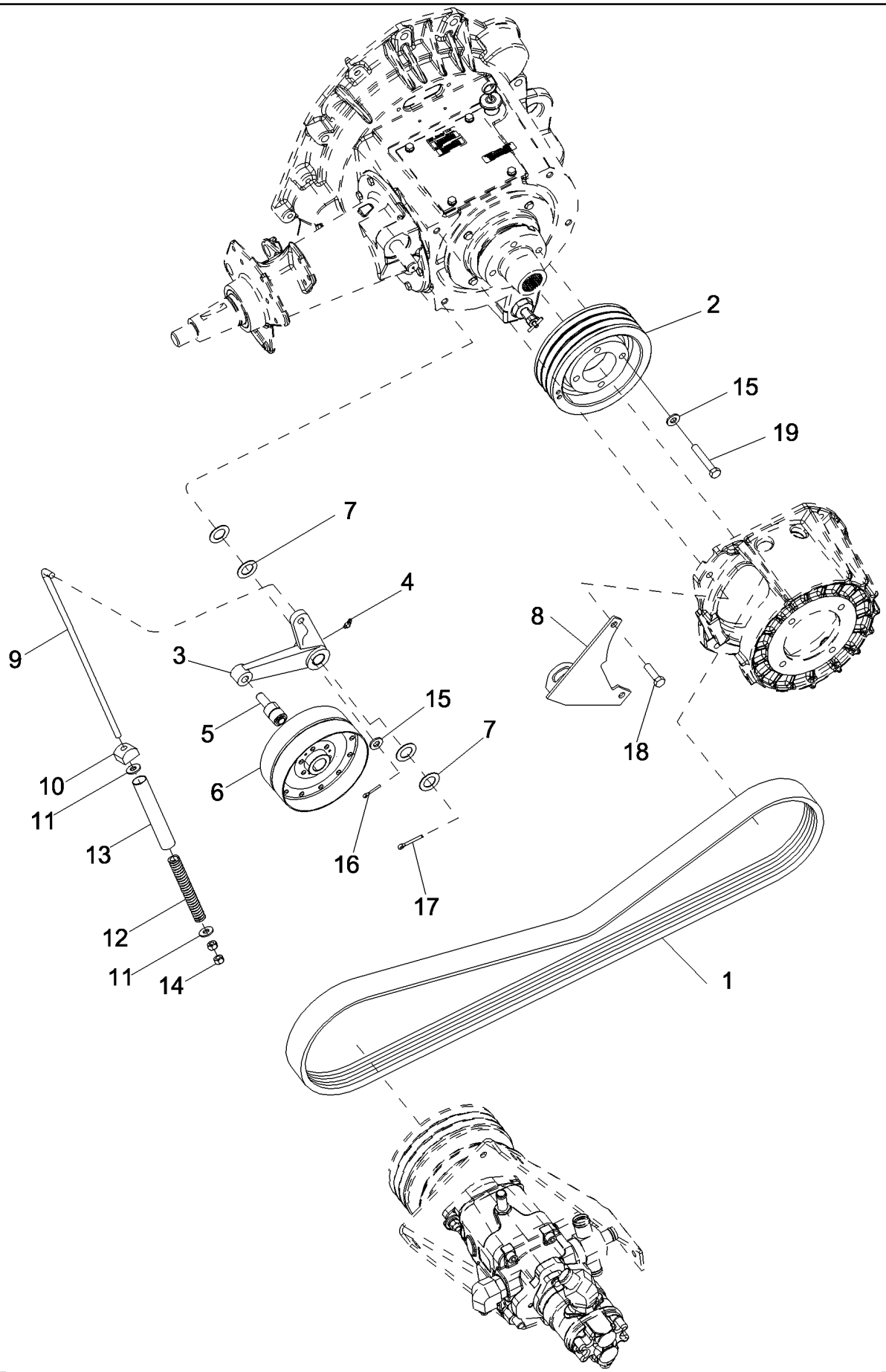

PDF created with pdfFactory trial version www.pdffactory.com

7088 AXIAL-FLOW COMBINE (EU) (4/08-)

08-09 PUMP AUXILIARY, BELT DRIVE

ссылка	Номер детали	Кол-во	Описание
1	87330894	1	BELT, Auxiliary Pump Drive, 2.5 BU/SEC Unloader
1	87549556	1	BELT, Auxiliary Pump Drive, 3.0 BU/SEC Unloader
2	87545153	1	PULLEY, PFC Pump Drive, 2.5 BU/SEC Unloader
2	87618176	1	PULLEY, PFC Pump Drive, 3.0 BU/SEC Unloader
3	1330517C1	1	LEVER, Auxiliary Pump Drive
4	219-90	1	NIPPLE, LUBE, 45є, 1/4" NPT x .80" lg, Drive,
5	274844R91	1	BEARING, Idler Pulley, 2.5 BU/SEC Unloader
5	86976596	1	BEARING, Idler Pulley, 3.0 BU/SEC Unloader
6	192865C1	1	PULLEY, Idler, 2.5 BU/SEC Unloader
6	174757C1	1	PULLEY, Idler, 3.0 BU/SEC Unloader
7	86624171	4	WASHER, 1 1/32" x 1 3/4" x .060",
8	87614053	1	BRACKET, Auxiliary Belt Idler Spring
9	87732390	1	ROD, Auxiliary Belt Idler Tension
10	87723912	1	PIVOT, Tension Rod
11	86624148	2	WASHER, 17/32" x 1 1/2" x .179",
12	87478118	1	SPRING, COMPRESSION, Drive Belt Tension
13	84130033	1	SPACER, RING, Auxiliary Pump Idler Spring
14	425-108	2	NUT, 1/2"-13, G5,
15	87364	5	WASHER, 1/2", SAE,
16	432-1216	1	PIN, SPLIT (COTTER), 3/16" x 1",
17	432-1624	1	PIN, SPLIT (COTTER), 1/4" x 1 1/2",
18	9707516	2	SCREW, Hex, 1/2"-13 x 1 3/4", G5,
19	50032	4	BOLT, Hex, 1/2"-13 x 2 1/4", G8, 2.5 BU/SEC Unloader
19	280620	4	BOLT, Hex, 1/2"-13 x 3", G8, 3.0 BU/SEC Unloader

PDF created with pdfFactory trial version www.pdffactory.com

08-10 HYDRAULICS, FEEDER LIFT

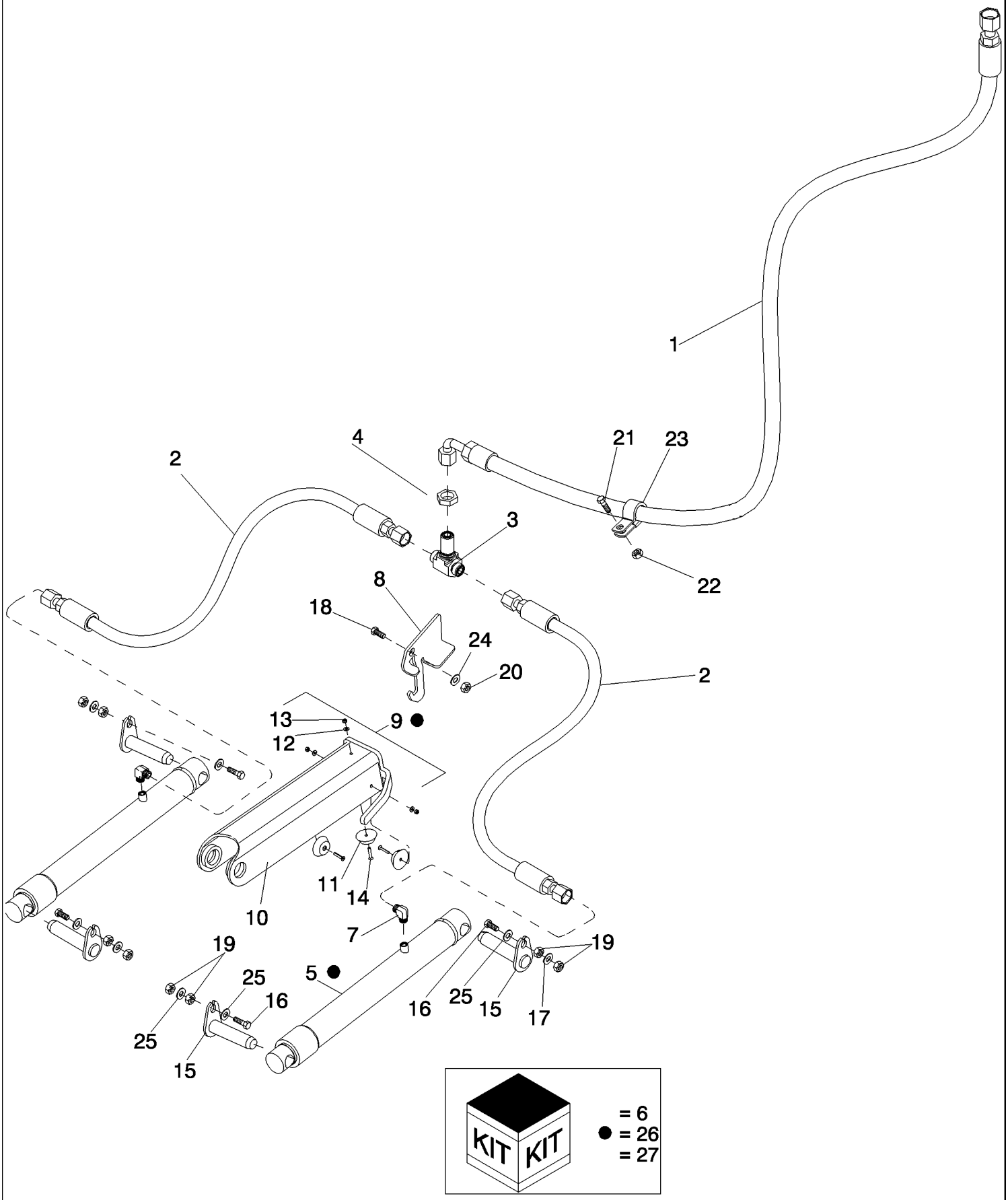

PDF created with pdfFactory trial version www.pdffactory.com

7088 AXIAL-FLOW COMBINE (EU) (4/08-)

08-10 HYDRAULICS, FEEDER LIFT

ссылка	Номер детали	Кол-во	Описание
1	87695295	1	HOSE ASSY., Feeder Lift
2	87673511	2	HOSE ASSY., Feeder Lift Cylinder
3	201-452	1	TEE, 13/16"-16, Blkhd Br,
4	87381289	1	NUT,
5	87318621	2	CYLINDER, 75 mm, Feeder Lift, 6088, 7088
5	87318618	2	CYLINDER, LIFT, 63 mm, Feeder Lift, 5088
6	87031097	1	KIT, SEALS, 75 mm Feeder Lift Cylinder, 6088, 7088
6	87031091	1	KIT, SEALS, 63 mm Feeder Lift Cylinder, 5088
7	86579691	2	ELBOW, 90є, 13/16"-18 ORFS x M18 x 1.5 ORB,
8	87387776	1	BRACKET, Safety Stand
9	87738685	1	DIA KIT, HARVESTER, 75 mm, Inc. 10 - 14, 6088, 7088
9	87584220	1	STAND, 63 mm, Inc. 10 - 14, 5088
10	87738678	1	CHANNEL, 75 mm Stand, 6088, 7088
10	87584217	1	CHANNEL, 63 mm Stand, 5088
11	87499125	3	LINER,
12	322357	3	WASHER, SPRING, Belleville, M6,
13	832-46406	3	NUT, LOCK, M6 x 1, Cl 8,
14	1589127	3	SCREW,
15	87332721	4	PIN ASSY.,
16	120080	4	BOLT,
17	86625256	4	WASHER, M12 x 28.5 x 4, HT,
18	87030508	1	BOLT, Hex Flg, M12 x 30, 10.9, Full Thd,
19	9706685	8	NUT, M12, Cl 8,
20	86512497	1	NUT, M12 x 1.75, Flg, Cl 10,
21	87656137	1	BOLT, Hex Flg, M8 x 20, 10.9, Full Thd,
22	86507066	1	NUT, M8 x 1.25, Flg, Cl 10,
23	470375C1	1	CLAMP,
24	87387107	1	BUSHING, LARGE,
25	140046	4	WASHER, SPRING, Belleville, M12,
26	87730764	1	DIA KIT, HARVESTER, 75 mm Feeder Lift Cylinder, Inc. 5, 9, 5088, 6088
27	87740338	1	DIA KIT,HARVESTER, BAGGER, Short Feeder Lift Cylinder Stand, 6088, 7088

PDF created with pdfFactory trial version www.pdffactory.com

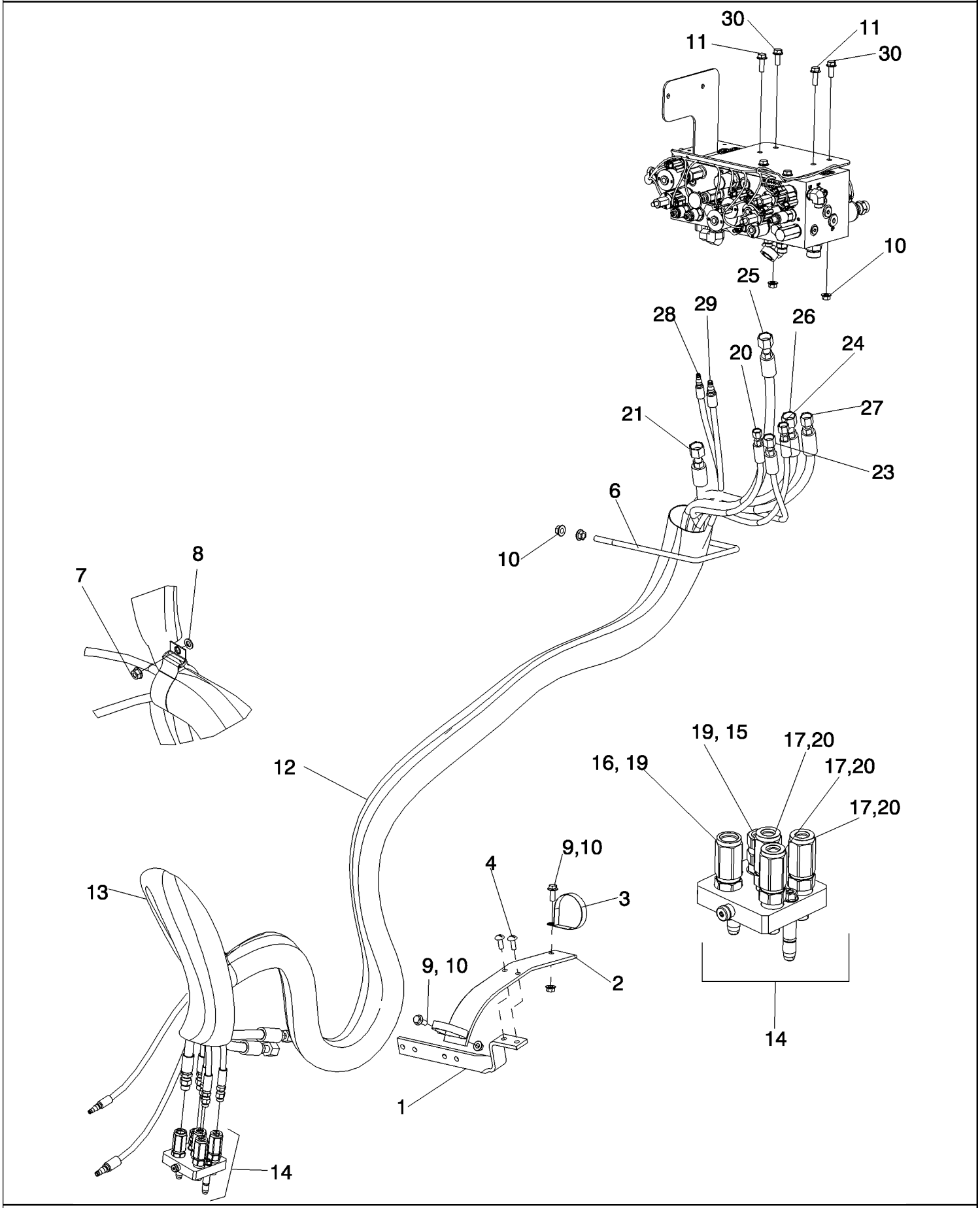

PDF created with pdfFactory trial version www.pdffactory.com

7088 AXIAL-FLOW COMBINE (EU) (4/08-)

08-11 HYDRAULICS - LATERAL TILT FEEDER

ссылка	Номер детали	Кол-во	Описание
1	87605327	1	BRACKET, Feeder Hoses
2	294511A1	1	SUPPORT, Feeder Hose
3	87301362	2	CLAMP, 3", Insul, 1/2" Bolt,
4	477-73816	2	SCREW, Sltd Serr Truss Hd, 3/8" x 1",
5	NSS	1	NOT SERVICED SEPARATELY, VALVE ASSEMBLY, Lateral Tilt Main With Fittings, See Figure 08-14
6	87701307	1	GUIDE, Feeder Hose Bundle
7	86619801	1	NUT, LOCK, M8 x 1.25, Flg, Cl 8,
8	86624184	1	WASHER, M8 x 16 x 1.6,
9	86705429	2	BOLT,
10	86050279	6	NUT, M10 x 1.5, Flg, Cl 10,
11	87698837	2	BOLT,
12	87318604	1	SLEEVE, Hose Bundle
13	87106239	1	SLEEVE,
14	87721868	1	COUPLING, Inc. 15 - 20
15	84435502	1	CONNECTOR, HYD.,
16	84435503	1	CONNECTOR, HYD.,
17	87691267	3	COUPLING,
18	NSS	1	NOT SERVICED SEPARATELY, BODY, Quick Coupler
19	86623898	2	SEAL, M17 OD x 3.2 Thk,
20	86623899	3	SEAL, M13 OD x 2.5 Thk,
	86623900	1	KIT, REPAIR,
21	84126928	1	HOSE ASSY., Feeder Reverser Return
22	87755035	1	HOSE ASSY., Reel Lift
23	87755036	1	HOSE ASSY., Reel Fore
24	87755037	1	HOSE ASSY., Reel Aft
25	87701305	1	HOSE ASSY., Reverser Supply
26	87557416	1	HOSE ASSY., Reel Return
27	87755034	1	HOSE ASSY., Reel Drive Supply
28	84128543	1	HOSE ASSY., Terrain Tracker Piston
29	84128544	1	HOSE ASSY., Terrain Tracker Rod
30	87698836	2	BOLT,

PDF created with pdfFactory trial version www.pdffactory.com

08-12 VALVE ASSEMBLY - STANDARD MAIN WITH FITTINGS

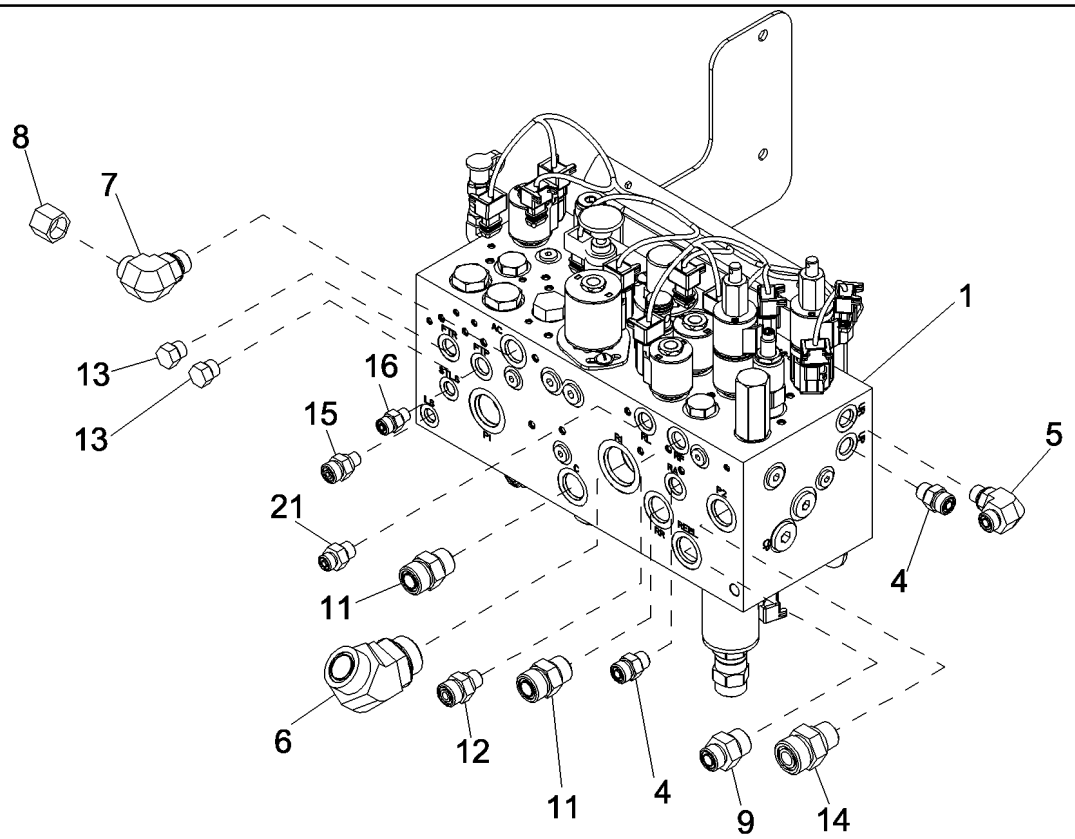

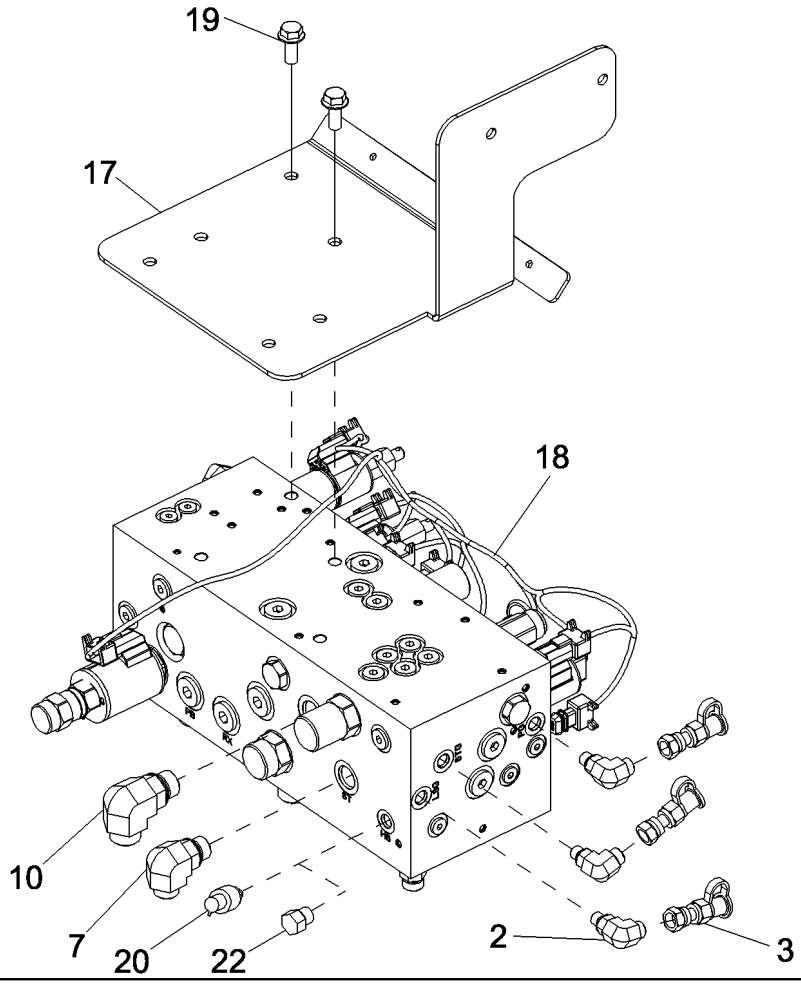

PDF created with pdfFactory trial version www.pdffactory.com

7088 AXIAL-FLOW COMBINE (EU) (4/08-)

08-12 VALVE ASSEMBLY - STANDARD MAIN WITH FITTINGS

ссылка	Номер детали	Кол-во	Описание
	NSS	1	NOT SERVICED SEPARATELY, VALVE ASSEMBLY, Standard Main With Fittings, Inc. 1 - 24
1	87740274	1	VALVE, Standard Without Fittings, See Figure 08-13
2	87681199	3	CONNECTOR, HYD.,
3	190117A1	3	COUPLING,
4	9993143	2	CONNECTOR, HYD., 11/16"-16 ORFS x 9/16"-18 ORB,
5	9840543	1	ELBOW, 90є, 11/16"-16 x 9/16"-18 Adj, ORFS,
6	201-318	1	ELBOW, 45є, 1 7/16"-12 x 1 5/16"-12. Adj, ORFS,
7	9992307	2	ELBOW, 90є, 13/16"-16 x 3/4"-16 Adj, ORFS,
8	87331951	1	ORIFICE,
9	87610720	1	CONNECTOR, HYD.,
10	87675522	1	ELBOW,
11	9621483	2	CONNECTOR, HYD., 1"-14 ORFS x 7/8"-14 ORB,
12	9992342	1	CONNECTOR, HYD.,
13	76349	2	PLUG, Hex Hd, 9/16"-18 ORB,
14	9840534	1	CONNECTOR, HYD., 1 3/16"-12 ORFS x 7/8"-14 ORB,
15	9840330	1	CONNECTOR, HYD.,
16	87681202	2	CONNECTOR, HYD.,
17	87756972	1	BRACKET, Valve
18	87695892	1	HARNESS, WIRE, Valve Block
19	87698836	2	BOLT,
20	87428328	1	SENSOR, High Pressure
21	201-111	1	CONNECTOR, HYD., 9/16"-18 ORFS x 9/16"-18 ORB,
22	9672438	1	PLUG, Hex Hd, 7/16"-20 ORB,

PDF created with pdfFactory trial version www.pdffactory.com

08-13 VALVE - STANDARD WITHOUT FITTINGS

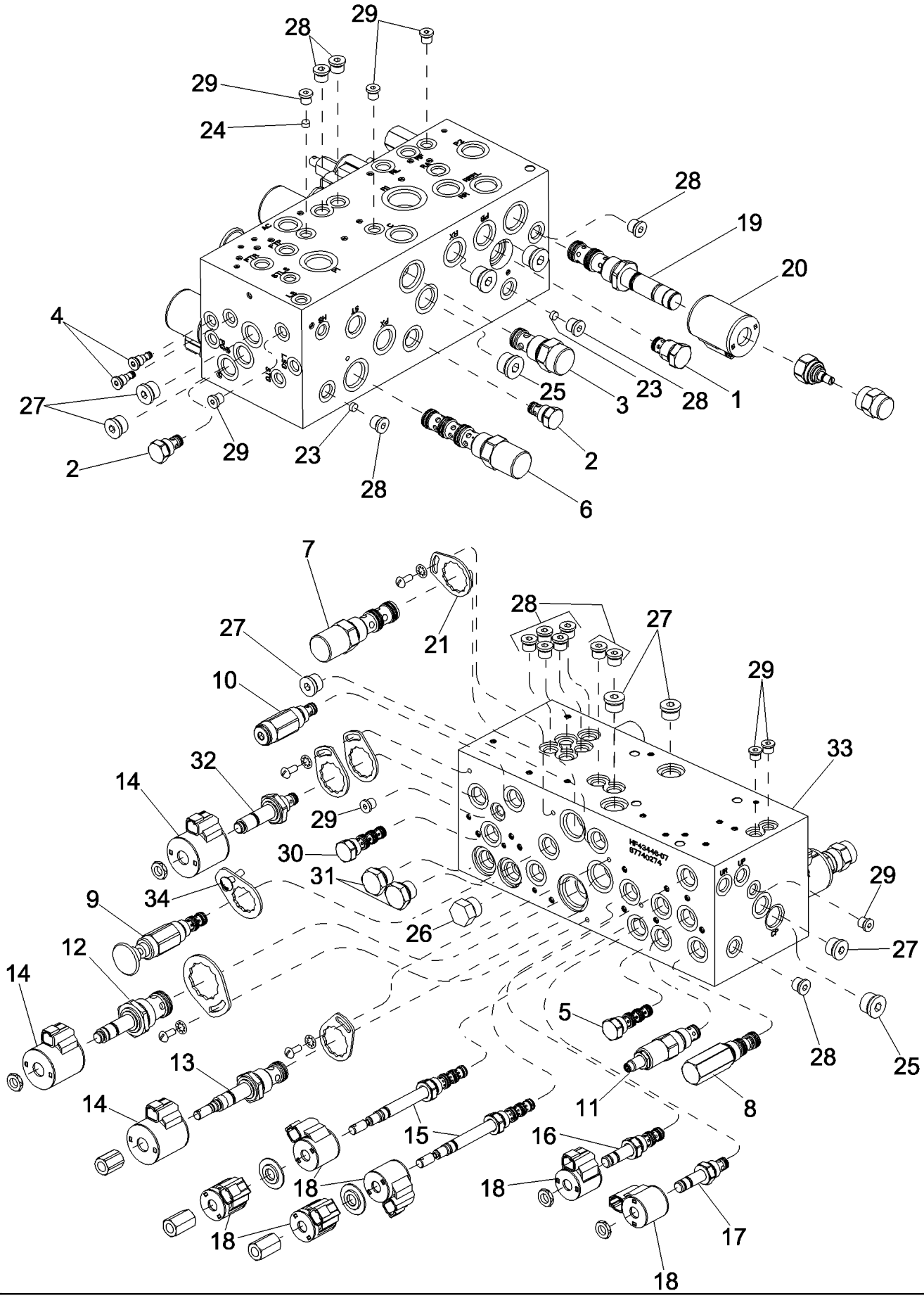

PDF created with pdfFactory trial version www.pdffactory.com

7088 AXIAL-FLOW COMBINE (EU) (4/08-)

08-13 VALVE - STANDARD WITHOUT FITTINGS

ссылка	Номер детали	Кол-во	Описание
	87740274	1	VALVE, Standard Without Fittings, Inc. 1 - 33
1	87347961	1	CARTRIDGE, Cartridge
2	120459A1	2	VALVE, Sense Check
3	87692273	1	VALVE, Cartridge
4	336791A1	2	VALVE, Cartridge
5	87692274	1	VALVE, Dual P.O. Check Cartridge
6	87743076	1	VALVE, Pressure Compensator Cartridge
7	87713477	1	VALVE, Pressure Compensator Cartridge
8	87637431	1	VALVE, PILOT, Spool Logic Element
9	87706815	1	VALVE, Feeder Lift Manual Override
10	87348337	1	CARTRIDGE, Cartridge
11	87348335	1	CARTRIDGE, Cartridge
12	87707808	1	VALVE, Solenoid Cartridge
13	87532595	1	VALVE, Proportional Solenoid
14	87582525	3	VALVE, HYDRAULIC, Coil
15	87347965	2	CARTRIDGE, 4W/3P Solenoid Cartridge
16	431548A1	1	VALVE, 3W/2P Solenoid Cartridge
17	87692445	1	VALVE, Solenoid Cartridge
18	87582524	6	VALVE, HYDRAULIC, Coil
19	87648728	1	VALVE, Proportional Solenoid Cartridge
20	87601433	1	CARTRIDGE, Cartridge
21	87484025	4	PACKAGE, REPAIR, Locking
22	87582532	1	SEAL, Kit, Valve Lockdown
23	87637430	2	PLUG,
24	87582543	1	PLUG,
25	86625138	4	PLUG, Hex Soc, 7/8"-14 ORB,
26	86512512	1	PLUG, Hex Hd, 7/8"-14 ORB,
27	86590562	6	PLUG, Hex Soc, 3/4"-16 ORB,
28	9625178	13	PLUG, Hex Soc, 9/16"-18 ORB,
29	278548	8	PLUG, Hex Soc, 7/16"-20 ORB,
30	87604610	1	FITTING, 4-Way Cavity
31	87013337	2	PLUG,
32	87637432	1	VALVE, 2W/2P NC Solenoid
33	NSS	1	NOT SERVICED SEPARATELY, VALVE BODY
34	84158912	1	PACKAGE, REPAIR, Hydraulic Cartridge Lockdown

PDF created with pdfFactory trial version www.pdffactory.com

08-14 VALVE ASSEMBLY - LATERAL TILT MAIN WITH FITTINGS

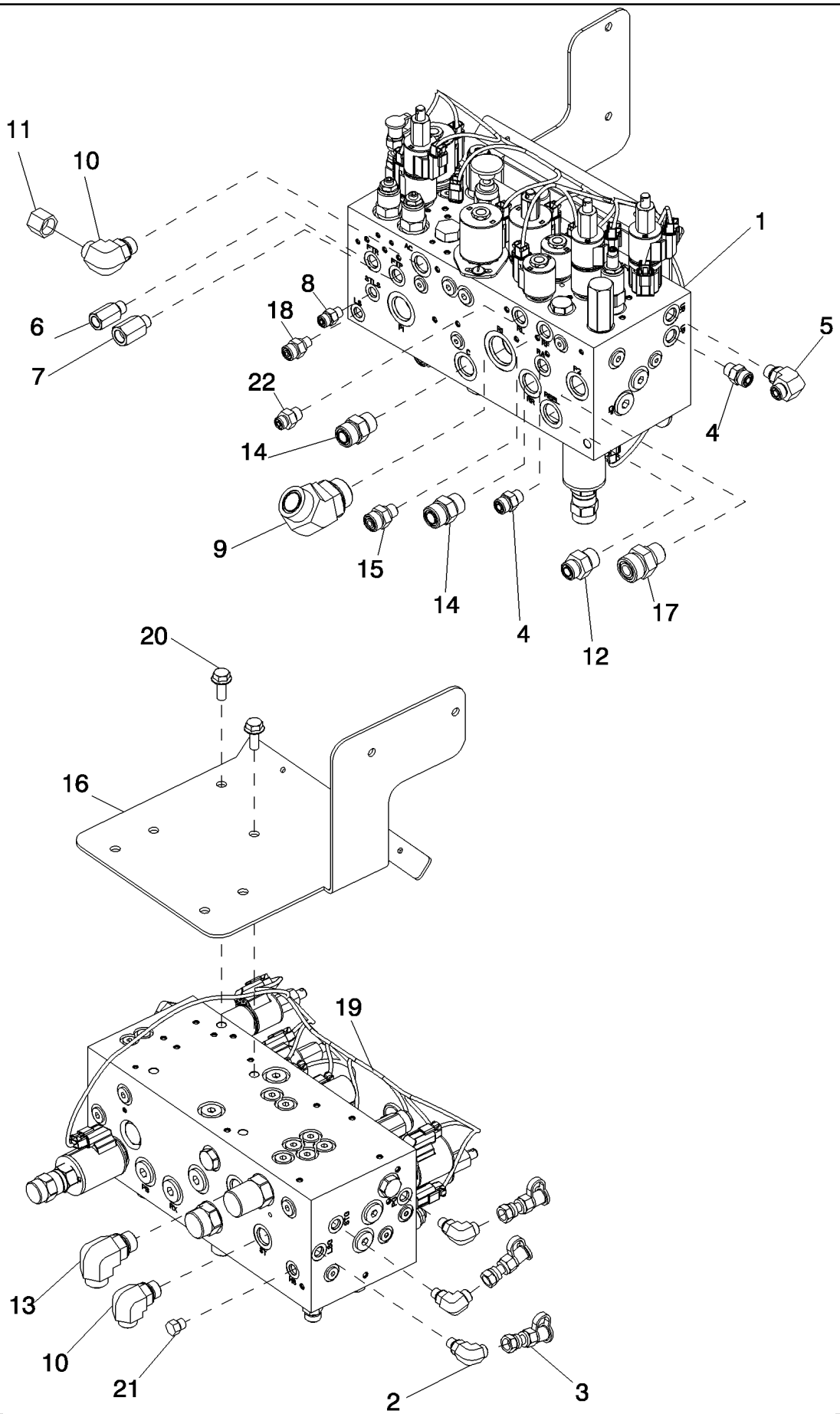

PDF created with pdfFactory trial version www.pdffactory.com

7088 AXIAL-FLOW COMBINE (EU) (4/08-)

08-14 VALVE ASSEMBLY - LATERAL TILT MAIN WITH FITTINGS

ссылка	Номер детали	Кол-во	Описание
	NSS	1	NOT SERVICED SEPARATELY, VALVE ASSEMBLY, Lateral Tilt Main With Fittings, Inc. 1 - 24
1	87740275	1	VALVE, Lateral Tilt Without Fittings, See Figure 08-15
2	87681199	3	CONNECTOR, HYD.,
3	190117A1	3	COUPLING,
4	9993143	2	CONNECTOR, HYD., 11/16"-16 ORFS x 9/16"-18 ORB,
5	9840543	1	ELBOW, 90є, 11/16"-16 x 9/16"-18 Adj, ORFS,
6	87377055	1	CONNECTOR, HYD.,
7	87377054	1	CONNECTOR, HYD.,
8	87681202	1	CONNECTOR, HYD.,
9	201-318	1	ELBOW, 45є, 1 7/16"-12 x 1 5/16"-12. Adj, ORFS,
10	9992307	2	ELBOW, 90є, 13/16"-16 x 3/4"-16 Adj, ORFS,
11	87331951	1	ORIFICE,
12	87610720	1	CONNECTOR, HYD.,
13	87675522	1	ELBOW,
14	9621483	2	CONNECTOR, HYD., 1"-14 ORFS x 7/8"-14 ORB,
15	9992342	1	CONNECTOR, HYD.,
16	87756972	1	BRACKET, Valve
17	9840534	1	CONNECTOR, HYD., 1 3/16"-12 ORFS x 7/8"-14 ORB,
18	9840330	1	CONNECTOR, HYD.,
19	87695892	1	HARNESS, WIRE, Valve Block
20	87698836	2	BOLT,
21	9672438	1	PLUG, Hex Hd, 7/16"-20 ORB,
22	201-111	1	CONNECTOR, HYD., 9/16"-18 ORFS x 9/16"-18 ORB,
23	87484025	1	PACKAGE, REPAIR, Locking Hydraulic Cartridge

PDF created with pdfFactory trial version www.pdffactory.com

08-15 VALVE - LATERAL TILT WITHOUT FITTINGS

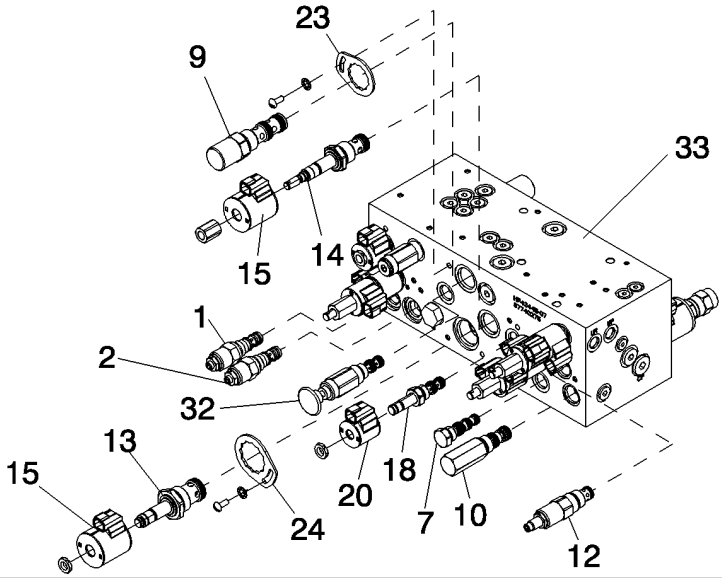

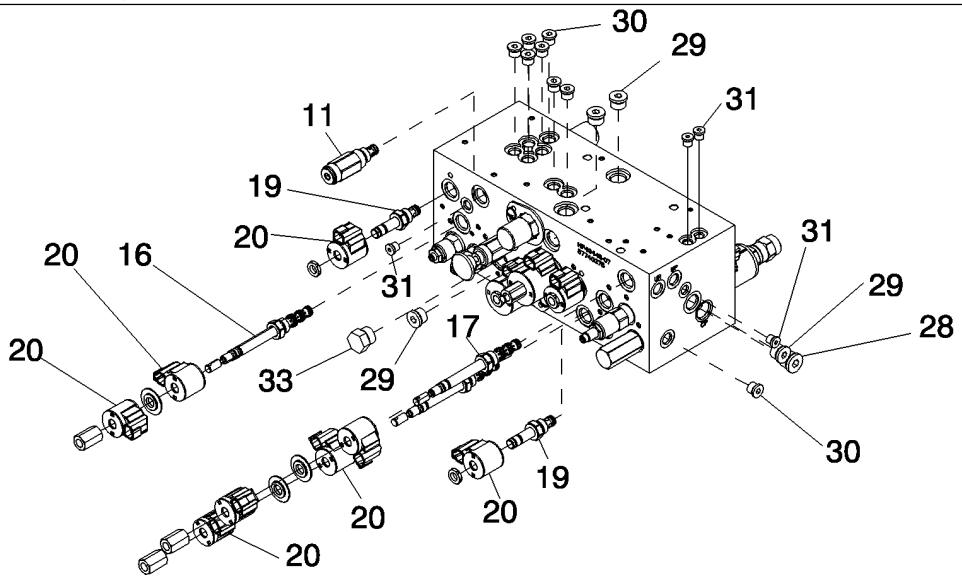

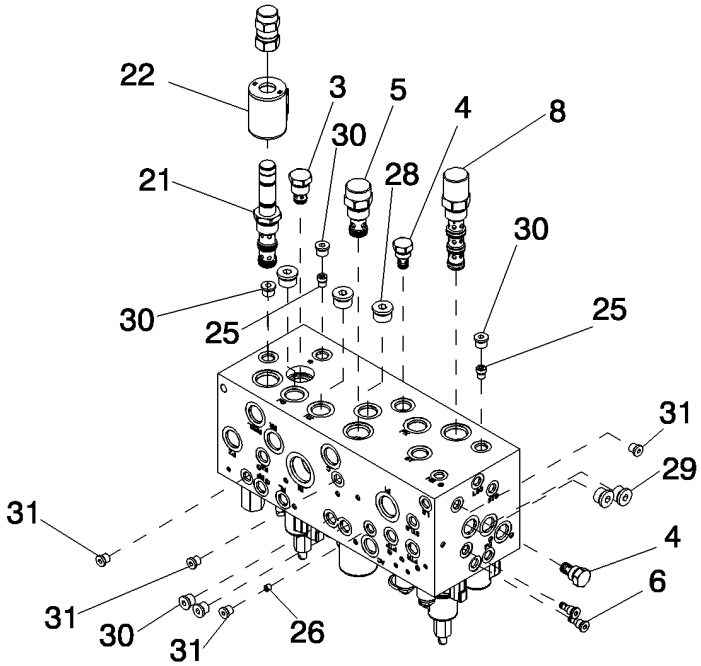

PDF created with pdfFactory trial version www.pdffactory.com

7088 AXIAL-FLOW COMBINE (EU) (4/08-)

08-15 VALVE - LATERAL TILT WITHOUT FITTINGS

ссылка	Номер детали	Кол-во	Описание
	87691630	1	VALVE, Lateral Tilt Without Fittings, Inc. 1 - 34
1	87532596	1	CARTRIDGE, Counterbalance Cartridge
2	87348545	1	CARTRIDGE, Counterbalance Cartridge
3	87347961	1	CARTRIDGE, Check Cartridge
4	120459A1	2	VALVE, Sense Check
5	87692273	1	VALVE, Check Cartridge
6	336791A1	2	VALVE, Check Cartridge
7	87692274	1	VALVE, Dual P.O. Check Cartridge
8	87743076	1	VALVE, Pressure Compensator Cartridge
9	87713477	1	VALVE, Pressure Compensator Cartridge
10	87637431	1	VALVE, PILOT, Spool Logic Element
11	87706815	1	VALVE, Feeder Lift Manual Override
12	87348337	1	CARTRIDGE, Relief Cartridge
13	87348335	1	CARTRIDGE, Relief Cartridge
14	87707808	1	VALVE, Solenoid Cartridge
15	87532595	1	VALVE, Proportional Solenoid
16	87582525	2	VALVE, HYDRAULIC, Coil
17	87347959	1	CARTRIDGE, 4W/3P Proportional Solenoid
18	87347965	2	CARTRIDGE, 4W/3P Solenoid Cartridge
19	431548A1	1	VALVE, 3W/2P Solenoid Cartridge
20	87692445	2	VALVE, Solenoid Cartridge
21	87582524	9	VALVE, HYDRAULIC, Coil
22	87648728	1	VALVE, Proportional Solenoid Cartridge
23	87601433	1	CARTRIDGE, Valve Cartridge
24	87582531	1	SEAL, Kit, Valve Lockdown
25	87582532	1	SEAL, Kit, Valve Lockdown
26	87637430	2	PLUG,
27	87582543	1	PLUG,
28	86625138	4	PLUG, Hex Soc, 7/8"-14 ORB,
29	86512512	1	PLUG, Hex Hd, 7/8"-14 ORB,
30	86590562	6	PLUG, Hex Soc, 3/4"-16 ORB,
31	9625178	13	PLUG, Hex Soc, 9/16"-18 ORB,
32	278548	8	PLUG, Hex Soc, 7/16"-20 ORB,
33	NSS	1	NOT SERVICED SEPARATELY, VALVE BODY

PDF created with pdfFactory trial version www.pdffactory.com

08-16 HYDRAULICS, STATIONARY AIR SCREEN/VACUUM CIRCUIT

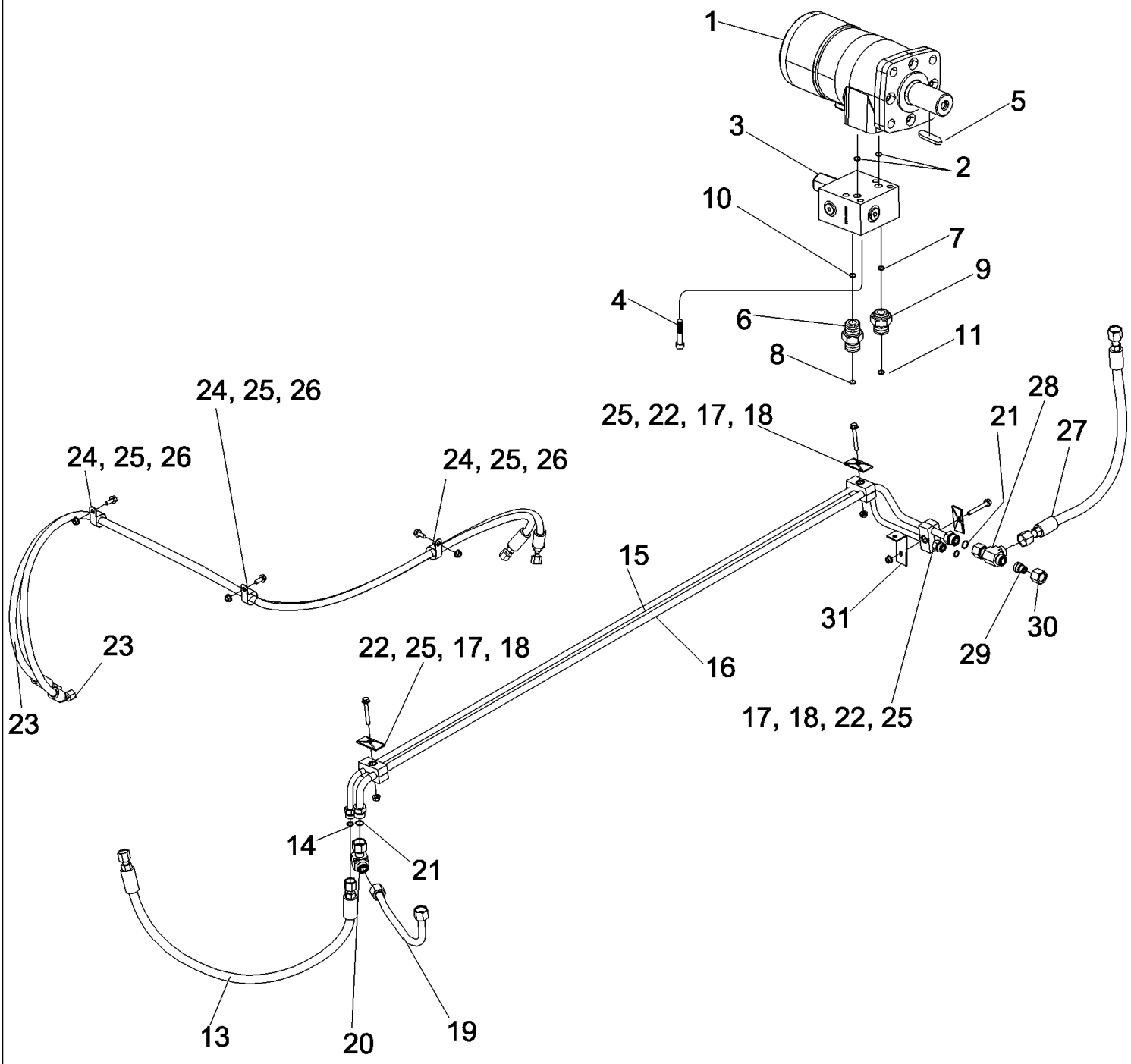

PDF created with pdfFactory trial version www.pdffactory.com

7088 AXIAL-FLOW COMBINE (EU) (4/08-)

08-16 HYDRAULICS, STATIONARY AIR SCREEN/VACUUM CIRCUIT

ссылка	Номер детали	Кол-во	Описание
1	86995688	1	MOTOR, HYDRAULIC, Rotary Air Screen
2	272344	2	O-RING, -112, 90 Duro, .487" ID x .103" Thk,
3	87641223	1	VALVE, Air Screen Bypass, See Figure 08-18
4	73170457	4	SCREW, Hex Soc Hd, M8 x 50, 8.8,
5	906093R1	1	KEY, M8 x 7 x 32, Par,
6	86597760	1	CONNECTOR, HYD., 1"-14 ORFS x M27 x 2 ORB, Inc. 7, 8
7	238-6014	1	O-RING, -014, 90 Duro, .489" ID x .070" Thk,
8	237-6012	1	O-RING, 12-1, 90 Duro, .924 ID x .118" Thk,
9	86597761	1	CONNECTOR, HYD., 13/16"-16 ORFS x M27 x 2 ORB, Inc. 10, 11
10	238-6016	1	O-RING, -016, 90 Duro, .614" ID x .070" Thk,
11	237-6012	1	O-RING, 12-1, 90 Duro, .924 ID x .118" Thk,
12	87698836	4	BOLT,
13	87609543	1	HOSE ASSY., Rotary Screen - Pump to Tube
14	238-6014	2	O-RING, -014, 90 Duro, .489" ID x .070" Thk,
15	87609432	1	TUBE, Rotary Screen Supply
16	87609433	1	TUBE, Rotary Screen Return
17	109619A1	3	CLAMP,
18	1347127C1	3	PLATE, Hose Clamp
19	87674222	1	TUBE ASSY., Rotary Air Screen Tube to Filter
20	201-361	1	ELBOW, 90є, 1"-14 x 1"-14 Fem Sw ORFS,
21	238-6016	3	O-RING, -016, 90 Duro, .614" ID x .070" Thk,
22	87670761	3	BOLT,
23	87634522	2	HOSE ASSY., Seperator Clutch Cylinder
24	515-23317	3	CLAMP, 1 1/4", Insul, 3/8" Bolt,
25	86507066	6	NUT, M8 x 1.25, Flg, Cl 10,
26	87656137	3	BOLT, Hex Flg, M8 x 20, 10.9, Full Thd,
27	87609430	1	HOSE ASSY., Vacuum Motor Return
28	201-433	1	TEE, 1"-14 ORFS x 1"-14 Sw Run,
29	201-161	1	UNION,
30	203-903	1	NUT, 1"-14 ORFS,
31	84126483	1	SUPPORT, Tube Bundle Center

PDF created with pdfFactory trial version www.pdffactory.com

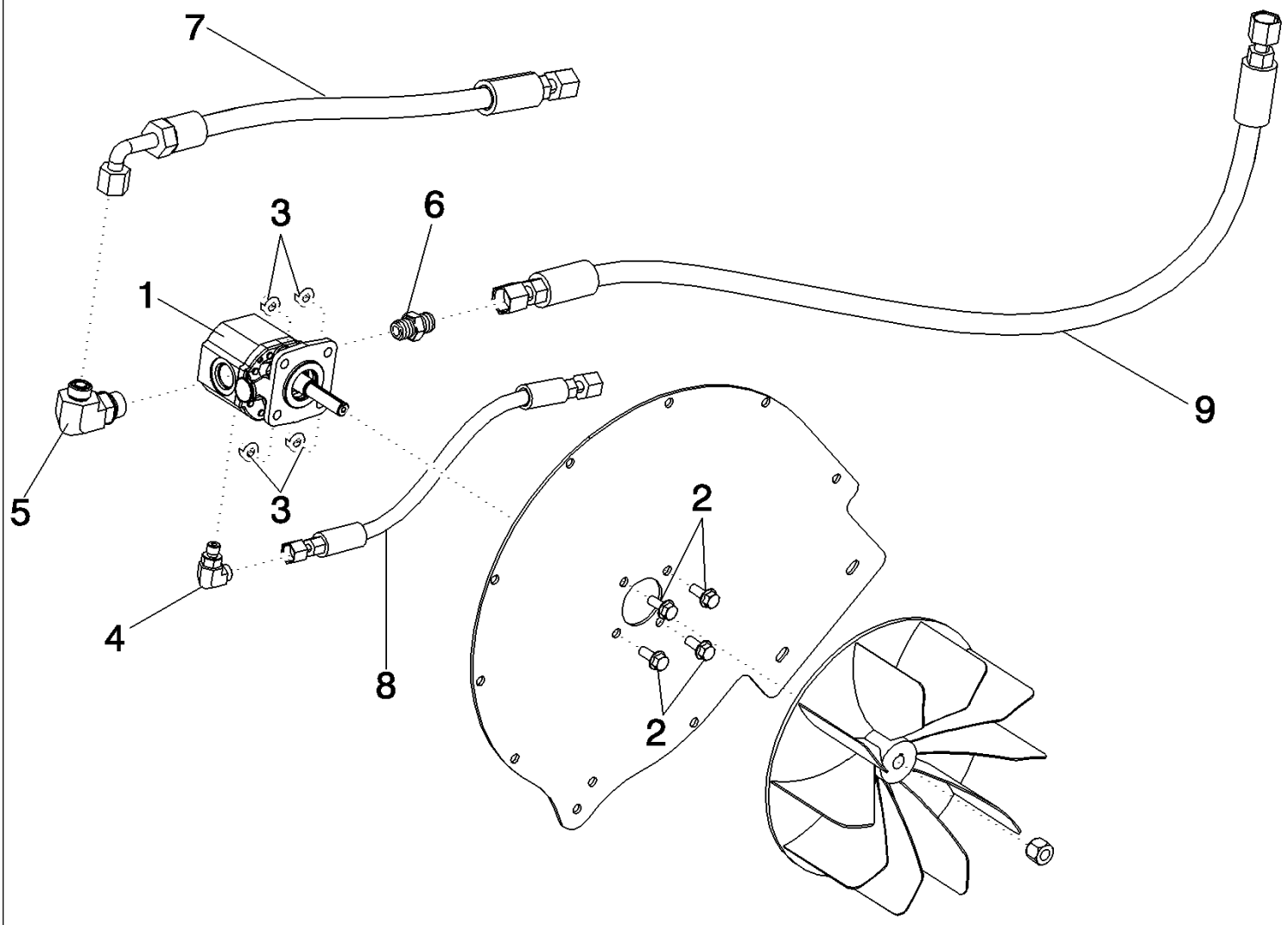

PDF created with pdfFactory trial version www.pdffactory.com

7088 AXIAL-FLOW COMBINE (EU) (4/08-)

08-17 HYDRAULICS, STATIONARY AIR SCREEN/VACUUM

ссылка	Номер детали	Кол-во	Описание
1	87359661	1	MOTOR, HYDRAULIC, Suction Fan
2	87624708	4	SCREW,
3	86507066	4	NUT, M8 x 1.25, Flg, Cl 10,
4	201-303	1	ELBOW, 90є, 9/16"-18 x 7/16"-20 Adj, ORFS,
5	201-326	1	ELBOW, 90є, 13/16"-16 x 7/8"-14, Adj, ORFS,
6	201-112	1	CONNECTOR, HYD., 13/16"-16 ORFS x 7/8"-14 ORB,
7	87609431	1	HOSE ASSY., Rotary Screen Tube
8	87609429	1	HOSE ASSY., Vacuum Motor Drain
9	87609428	1	HOSE ASSY., Supply

PDF created with pdfFactory trial version www.pdffactory.com

08-18 VALVE ASSEMBLY - STATIONARY SCREEN BYPASS

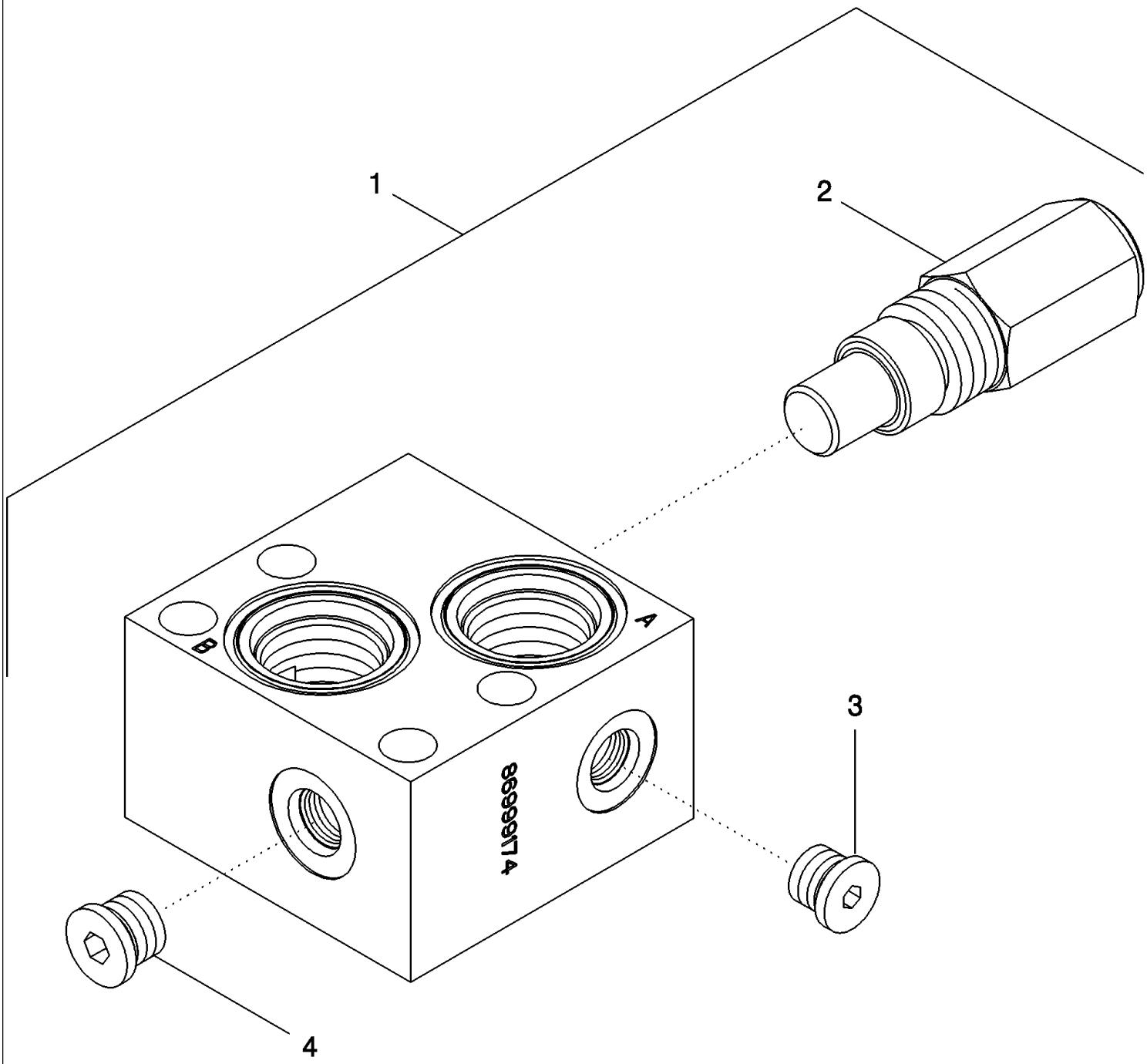

PDF created with pdfFactory trial version www.pdffactory.com

7088 AXIAL-FLOW COMBINE (EU) (4/08-)

08-18 VALVE ASSEMBLY - STATIONARY SCREEN BYPASS

ссылка	Номер детали	Кол-во	Описание
1	87641223	1	VALVE, Rotary Air Screen, Inc. 2 - 4
2	87645709	1	VALVE, 280 psi, Preset
3	87035062	1	PLUG, Hex Soc, 1/2"-20 ORB,
4	9625178	1	PLUG, Hex Soc, 9/16"-18 ORB,

PDF created with pdfFactory trial version www.pdffactory.com

08-19 ACCUMULATOR - MOUNTING AND SYSTEM

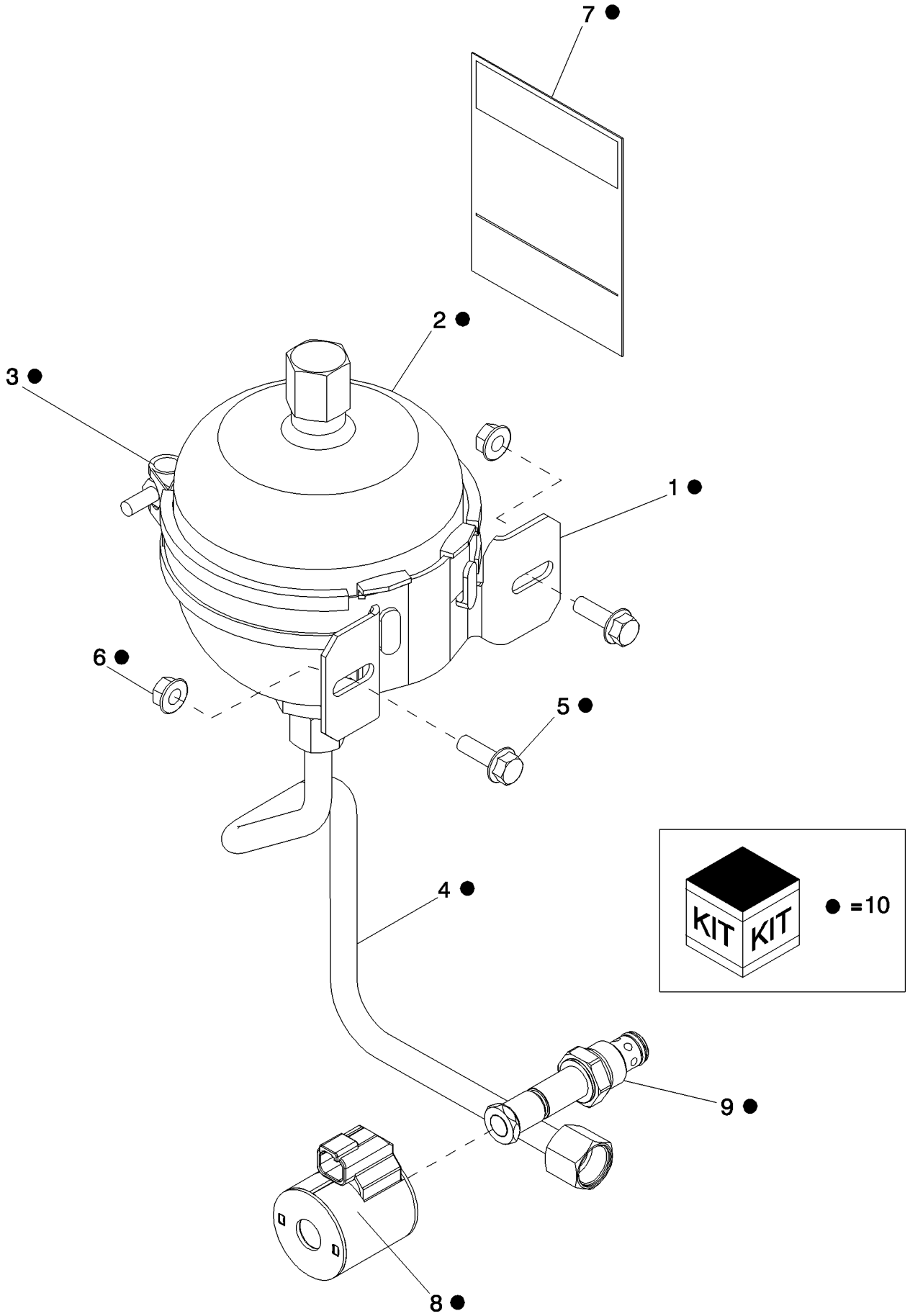

PDF created with pdfFactory trial version www.pdffactory.com

7088 AXIAL-FLOW COMBINE (EU) (4/08-)

08-19 ACCUMULATOR - MOUNTING AND SYSTEM

ссылка	Номер детали	Кол-во	Описание
1	87105669	1	BRACKET, Accumulator
2	86976987	1	ACCUMULATOR, Hydraulic System
3	87105670	1	CLAMP, Accumulator
4	87701839	1	TUBE ASSY., Accumulator
5	857-8025	2	BOLT, Hex Flg, M8 x 25, 10.9,
6	86507066	2	NUT, M8 x 1.25, Flg, Cl 10,
7	344945A1	1	DECAL, Warning Pressurized Vessel
8	87582525	1	VALVE, HYDRAULIC, Coil
9	431547A1	1	VALVE, Solenoid Cartridge
10	87730346	1	DIA KIT, HARVESTER, Ride Control Accumulator, Inc. 1-9

PDF created with pdfFactory trial version www.pdffactory.com

08-20 HYDRAULICS, UNLOADER SWING CIRCUIT

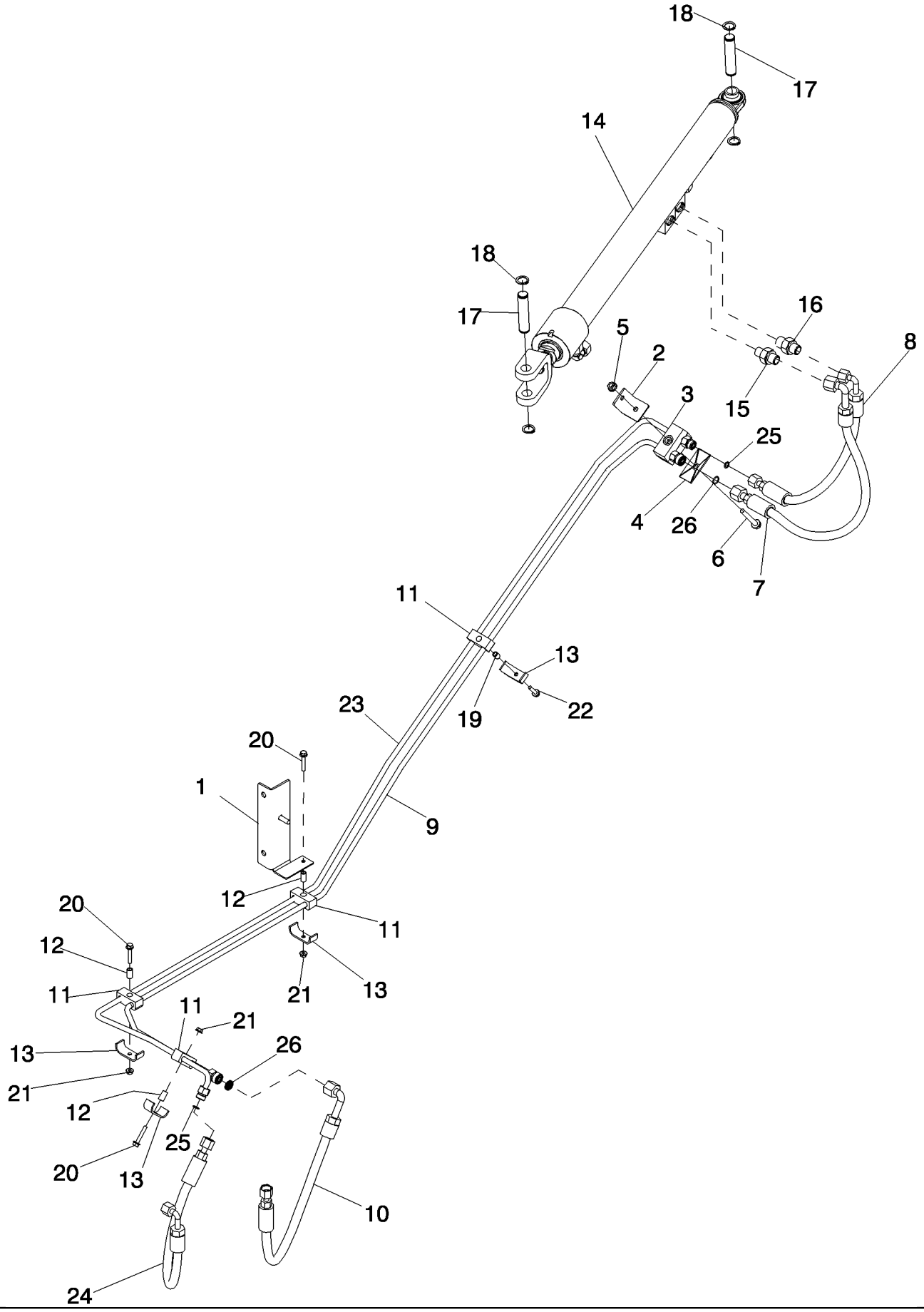

PDF created with pdfFactory trial version www.pdffactory.com

7088 AXIAL-FLOW COMBINE (EU) (4/08-)

08-20 HYDRAULICS, UNLOADER SWING CIRCUIT

ссылка	Номер детали	Кол-во	Описание
1	84129177	1	BRACKET, Unloader Tube
2	87560423	1	BRACKET, Unloader Tube Clamp
3	86988833	1	CLAMP,
4	1347127C1	1	PLATE, Hose Clamp
5	86507066	1	NUT, M8 x 1.25, Flg, Cl 10,
6	87670761	1	BOLT,
7	87536687	1	HOSE ASSY., Unloader Rod
8	87536688	1	HOSE ASSY., Unloader Piston
9	87616985	1	TUBE, Unloader Swing Piston
10	87756284	1	HOSE ASSY., Unloader Swing Rod
11	364170A1	4	INSERT,
12	418785A1	3	SPACER,
13	418784A1	4	PLATE,
14	87645216	1	HYDRAULIC CYLINDER, Unloader Swing, See Figure 08-21
15	86579676	1	CONNECTOR, HYD., 13/16"-16 ORFS x M18 x 1.5 ORB,
16	86579673	1	CONNECTOR, HYD., 11/16"-16 ORFS x M18 x 1.5 ORB,
17	84320612	2	PIN,
18	300627	4	RING, SNAP, M19, Ext,
19	87560349	1	BUSHING, LARGE,
20	87698832	3	BOLT,
21	86050300	3	NUT, M6 x 1, Flg, Cl10,
22	87670758	1	BOLT,
23	87701881	1	TUBE ASSY., Unloader Swing Rod
24	87756280	1	HOSE ASSY., Unloader Swing Piston
25	9993141	2	O-RING, -012, 90 Duro, .364" ID x .070" Thk,
26	9992298	2	O-RING, -014, 90 Duro, .489" ID x .070" Thk,

PDF created with pdfFactory trial version www.pdffactory.com

ART

NOT

AVAILABLE

PDF created with pdfFactory trial version www.pdffactory.com

7088 AXIAL-FLOW COMBINE (EU) (4/08-)

08-21 CYLINDER ASSY, UNLOADER SWING

ссылка	Номер детали	Кол-во	Описание
	87645216	1	HYDRAULIC CYLINDER, Unloader Swing, Inc. 1 - 18
1	84022122	1	NUT, Thin, M24 x 2, Cl 05,
2	87031322	1	CLEVIS,
3	87691173	1	KIT, SEALS, Incl. 4 - 15
4	NSS	2	NOT SERVICED SEPARATELY, METSEAL
5	NSS	1	NOT SERVICED SEPARATELY, PISTON SEAL
6	NSS	1	NOT SERVICED SEPARATELY, WEAR RING
7	NSS	1	NOT SERVICED SEPARATELY, BACK-UP RING
8	NSS	1	NOT SERVICED SEPARATELY, O-RING
9	NSS	1	NOT SERVICED SEPARATELY, O-RING
10	NSS	1	NOT SERVICED SEPARATELY, BACK-UP RING
11	NSS	1	NOT SERVICED SEPARATELY, BUFFER
12	NSS	1	NOT SERVICED SEPARATELY, ROD SEAL
13	NSS	1	NOT SERVICED SEPARATELY, WEAR RING
14	NSS	1	NOT SERVICED SEPARATELY, WIPER RING
15	NSS	1	NOT SERVICED SEPARATELY, O-RING
16	87691174	1	VALVE, CHECK,
17	87691175	1	REGULATOR,
18	87719937	1	ADAPTER,

PDF created with pdfFactory trial version www.pdffactory.com

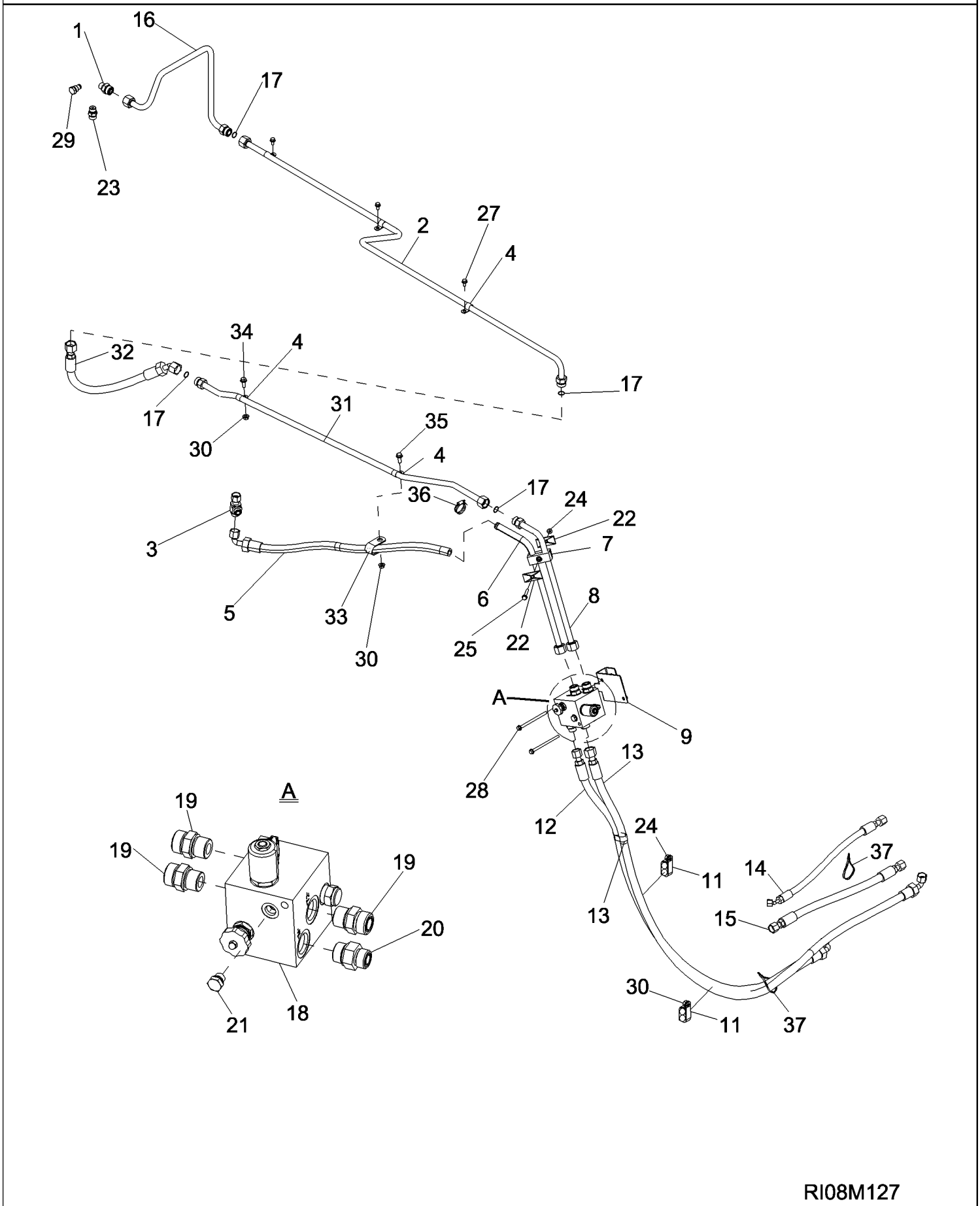

PDF created with pdfFactory trial version www.pdffactory.com

7088 AXIAL-FLOW COMBINE (EU) (4/08-)

08-22 HYDRAULICS, SPREADER

ссылка	Номер детали	Кол-во	Описание
1	9840534	1	CONNECTOR, HYD., 1 3/16"-12 ORFS x 7/8"-14 ORB,
2	87725086	1	TUBE ASSY., Spreader Supply
3	86624133	1	TEE, 1"-14 ORFS x 1"-14 Sw Run,
4	515-23190	5	CLAMP, 3/4", Insul, 3/8" Bolt,
5	84130571	1	HOSE ASSY., Spreader Return
6	84130572	1	TUBE ASSY., Spreader Return
7	87000151	1	CLAMP,
8	87631071	1	TUBE ASSY., Spreader Supply
9	87631076	1	BRACKET,
11	470375C1	2	CLAMP,
12	87631078	1	HOSE ASSY., Spreader Supply
13	87709638	1	HOSE ASSY., Spreader Return
14	84130573	1	HOSE ASSY., Motor Drain
15	87709636	1	HOSE ASSY., Motor Supply
16	87702178	1	TUBE ASSY., Spreader Supply
17	238-6018	4	O-RING, -018, 90 Duro, .739" ID x .070" Thk,
18	87688779	1	VALVE, Spreader
19	86579682	3	CONNECTOR, HYD., 1 3/16"-12 ORFS x M27 x 2 ORB,
20	86597760	1	CONNECTOR, HYD., 1"-14 ORFS x M27 x 2 ORB,
21	220064A1	1	PLUG, M14 x 1.5, ORB,
22	1347127C1	2	PLATE, Hose Clamp
23	87662315	1	VALVE, CHECK, In-Line
24	86507066	2	NUT, M8 x 1.25, Flg, Cl 10,
25	87656138	1	BOLT,
26	87656137	1	BOLT, Hex Flg, M8 x 20, 10.9, Full Thd,
27	87681207	3	BOLT,
28	87681208	2	NUT,
29	87694720	1	PLUG,
30	86050279	3	NUT, M10 x 1.5, Flg, Cl 10,
31	87725085	1	TUBE ASSY., Spreader Supply
32	87725087	1	HOSE ASSY., Spreader Supply
33	515-23317	1	CLAMP, 1 1/4", Insul, 3/8" Bolt,
34	87698836	1	BOLT,
35	87698838	1	BOLT,
36	214-1410	1	CLAMP, HOSE, #10, 0.56/1.06 Type F Worm,
37	86566989	2	STRAP, CABLE, M4.75 x 190.5 L,

PDF created with pdfFactory trial version www.pdffactory.com

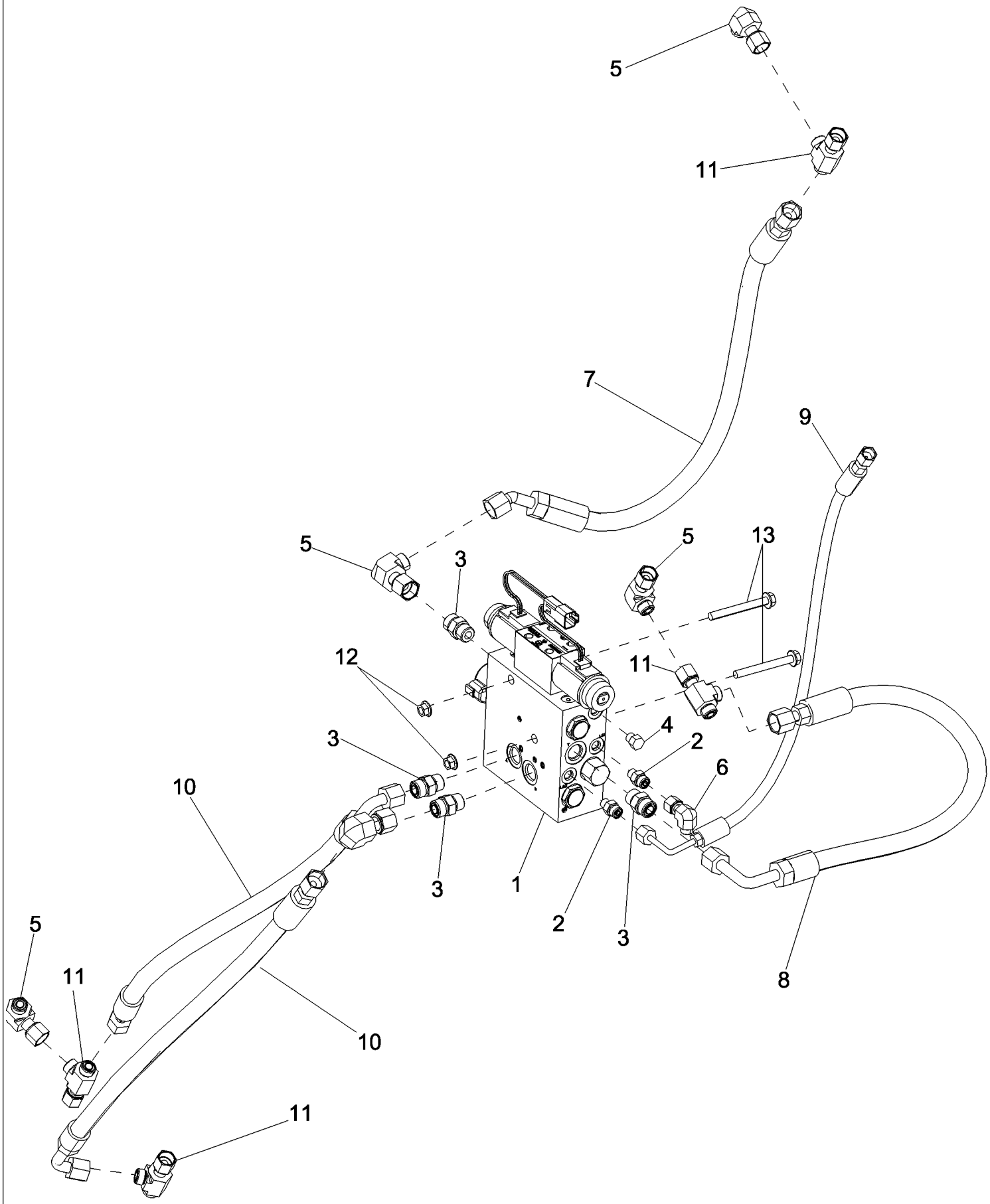

PDF created with pdfFactory trial version www.pdffactory.com

ссылка	Номер детали	Кол-во	Описание
1	87673657	1	VALVE, Auto Guidance With Steer Enable, See Figure 08-24
2	87681202	2	CONNECTOR, HYD.,
3	9992305	4	CONNECTOR, HYD., 13/16"-16 ORFS x 3/4"-16 ORB,
4	9672438	1	PLUG, Hex Hd, 7/16"-20 ORB,
5	201-320	5	ELBOW, 90є, 13/16"-16 x 13/16"-16 Fem Sw ORFS,
6	87017578	1	ELBOW, 90є, 9/16"-18 x 9/16"-18 Fem Sw ORFS,
7	87499106	1	HOSE ASSY., Auto Guidance Inlet
8	87694532	1	HOSE ASSY., Auto Guidance Tank
9	87694533	1	HOSE ASSY., Auto Guidance LS2
10	87750011	2	HOSE ASSY., Auto Guidance Work Port
11	86624132	4	TEE, 13/16"-16 ORFS x 13/16"-16 Sw Run,
12	86050279	2	NUT, M10 x 1.5, Flg, Cl 10,
13	87695408	2	BOLT,

PDF created with pdfFactory trial version www.pdffactory.com

08-24 VALVE ASSEMBLY, AUTO GUIDANCE WITH STEER ENABLE

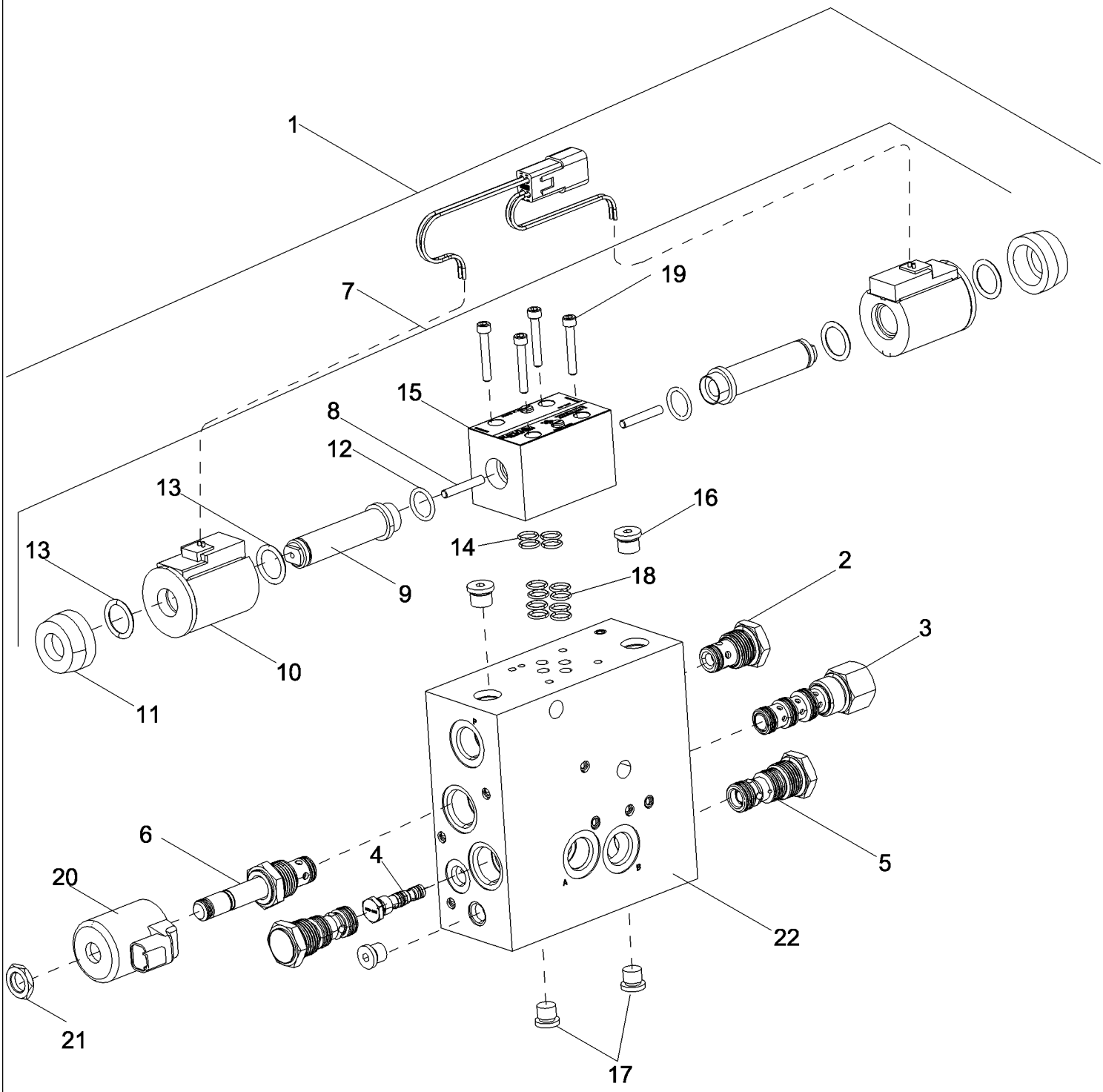

PDF created with pdfFactory trial version www.pdffactory.com

7088 AXIAL-FLOW COMBINE (EU) (4/08-)

08-24 VALVE ASSEMBLY, AUTO GUIDANCE WITH STEER ENABLE

ссылка	Номер детали	Кол-во	Описание
1	87673657	1	VALVE, Auto Guidance With Steer Enable, Inc. 2 - 22
2	87591594	1	VALVE, Check Cartridge
3	87590351	1	VALVE, Pilot To Shift Cartridge
4	87591593	1	VALVE, Shuttle Cartridge
5	87591596	2	VALVE, P.O. Check Cartridge
6	NSS	1	NOT SERVICED SEPARATELY, VALVE, 2W2P Solenoid Cartridge
7	87673659	1	VALVE, Proportional, Inc. 8 - 15
8	196737A1	2	SPLIT PIN/SAFETY PIN, Proportional Valve
9	87439633	2	TUBE, Proportional Valve
10	87662365	2	COIL, 12 VDC, Proportional Valve
11	188106A1	2	NUT, Retaining, Proportional Valve
12	14457280	2	O-RING, -114, 70 Duro, .612" ID x .103" Thk, Proportional Valve
13	122056	4	O-RING, -017, 70 Duro, .676" ID x .070" Thk, Proportional Valve
14	86629543	4	O-RING, -012, 70 Duro, .364" ID x .070" Thk, Proportional Valve
15	NSS	1	NOT SERVICED SEPARATELY, BODY, Proportional Valve
16	87035062	2	PLUG, Hex Soc, 1/2"-20 ORB,
17	278548	3	PLUG, Hex Soc, 7/16"-20 ORB,
18	238-6012	4	O-RING, -012, 90 Duro, .364" ID x .070" Thk,
19	281060	4	SCREW, Hex Soc Hd, #10-24 x 1 1/4",
20	87623908	1	COIL ASSY., Solenoid
21	195683A1	1	NUT, 1/2"-13, Thin,
22	NSS	1	NOT SERVICED SEPARATELY, BODY, Auto Guidance Valve

PDF created with pdfFactory trial version www.pdffactory.com

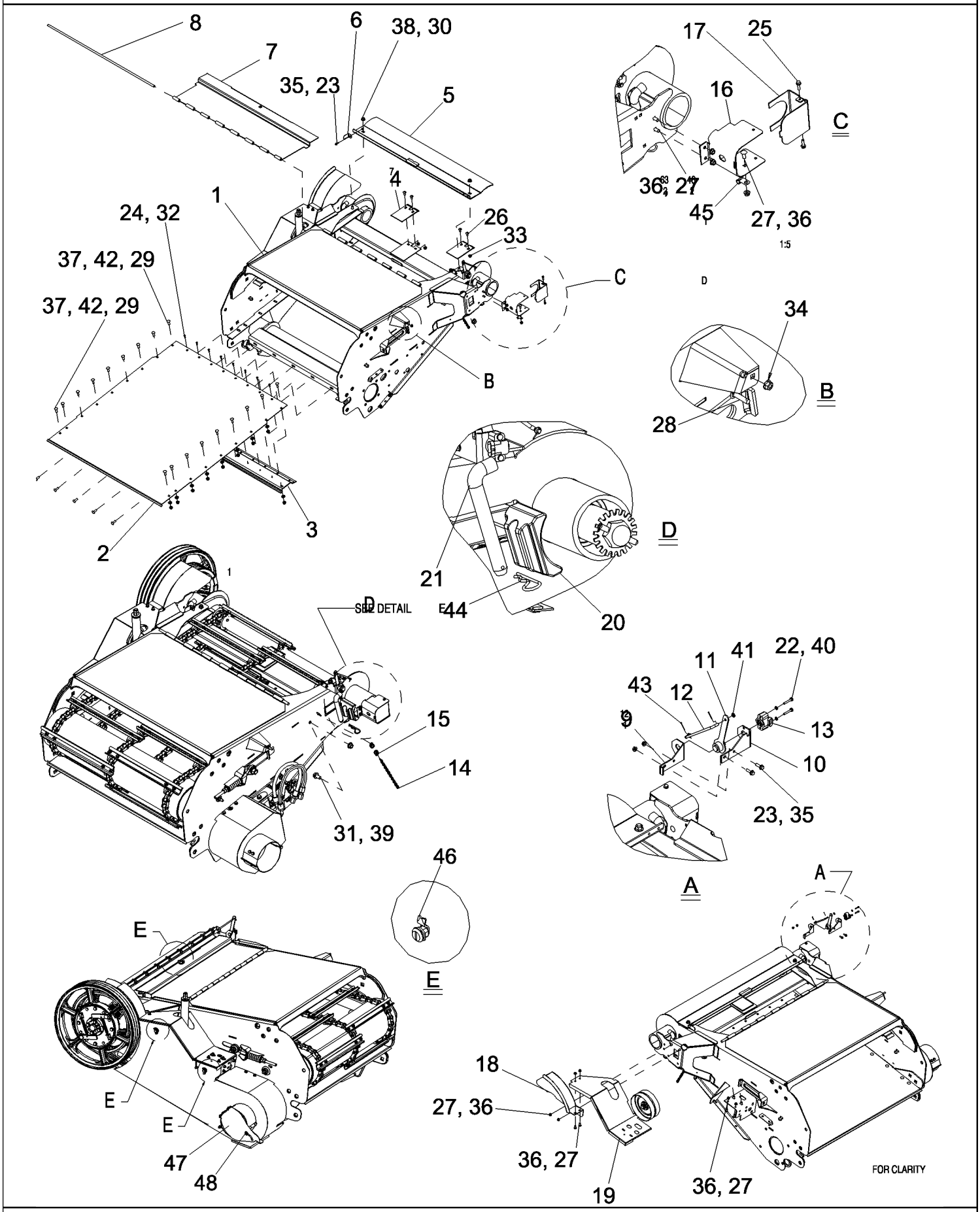

PDF created with pdfFactory trial version www.pdffactory.com

7088 AXIAL-FLOW COMBINE (EU) (4/08-)

09A-01 FEEDER, STANDARD

ссылка	Номер детали	Кол-во	Описание
1	87545025	1	FEEDER, Feeder, 60 Inch
2	87666921	1	SHEET ASSY., Feeder Floor, 60 Inch
3	87332714	1	COVER ASSY, Feeder Rear
2	87535463	1	SHEET ASSY., DIA, Feeder Floor, 60 Inch Perforated
4	87565180	3	BRACKET, Feeder Pivot
5	87332712	1	COVER ASSY, Feeder Top
6	1322144C2	1	CLIP, Feeder Door
7	87666923	1	DOOR, Feeder Top
8	87666924	1	ROD, Hinge
9	87384568	1	SHEET, Feeder Sensor
10	87607940	1	BRACKET, Feeder Sensor
11	87105024	1	ARM,
12	87384572	1	BRACKET, Feeder Sensor
13	87330286	1	SENSOR, Rotary Position
14	167570C1	2	CHAIN, Coil
15	635503R1	2	SPRING, Pedal Return
16	87754319	1	BRACKET, Feeder Speed Sensor
17	87618166	1	SHIELD, Feeder Speed Sensor
18	87712040	1	COVER ASSY, Feeder Drive, 60 Inch
19	87474735	1	SHIELD, Feeder Drive, 60 Inch
20	87572297	2	RETAINER, Feeder Pivot
21	87582030	2	PIN ASSY., Feeder Pivot
22	86502967	2	SCREW, Cross Pan Hd, M5 x 30,
23	87675531	3	BOLT,
24	87015849	8	SCREW, Phil Flat Hd, M6 x 20, 5.8,
25	87010469	2	SCREW, SELF TAPPING, Hex Wash Hd, M6.3 x 25,
26	87573369	6	SCREW,
27	87682383	9	BOLT,
28	87682386	1	BOLT,
29	87682392	23	BOLT,
30	9503839	2	BOLT, CARRIAGE,
31	87698766	2	BOLT,
32	353308	8	NUT, M6 x 1, Cl 8,
33	825-51410	6	NUT, M10, Flg Ser,
34	86619801	1	NUT, LOCK, M8 x 1.25, Flg, Cl 8,
35	86050300	3	NUT, M6 x 1, Flg, Cl10,
36	86507066	9	NUT, M8 x 1.25, Flg, Cl 10,
37	86050279	23	NUT, M10 x 1.5, Flg, Cl 10,
38	86512497	2	NUT, M12 x 1.75, Flg, Cl 10,
39	86512498	2	NUT, M16 x 2, Flg, Cl 10,
40	9824326	2	WASHER, M5,

PDF created with pdfFactory trial version www.pdffactory.com

ссылка	Номер детали	Кол-во	Описание
41	86588450	2	WASHER, M6 x 12 x 1.6 Thk,
42	86625253	23	WASHER, M11 x 24 x 2,
43	86977785	2	PIN, SPLIT (COTTER), M1.6 x 20,
44	1978738C1	2	PIN, SPLIT (COTTER),
45	516-2395	1	CLAMP, J, 7/16" Insul, 3/8" Bolt,
46	135476A1	3	LOCK, Shield
47	84159143	1	COVER ASSY, Protection
48	140045	1	WASHER, SPRING, Belleville, M10,

PDF created with pdfFactory trial version www.pdffactory.com

7088 AXIAL-FLOW COMBINE (EU) (4/08-)

09A-01A KIT, DIA, NON ROCK TRAP TO ROCK TRAP FEEDER ASSEMBLY

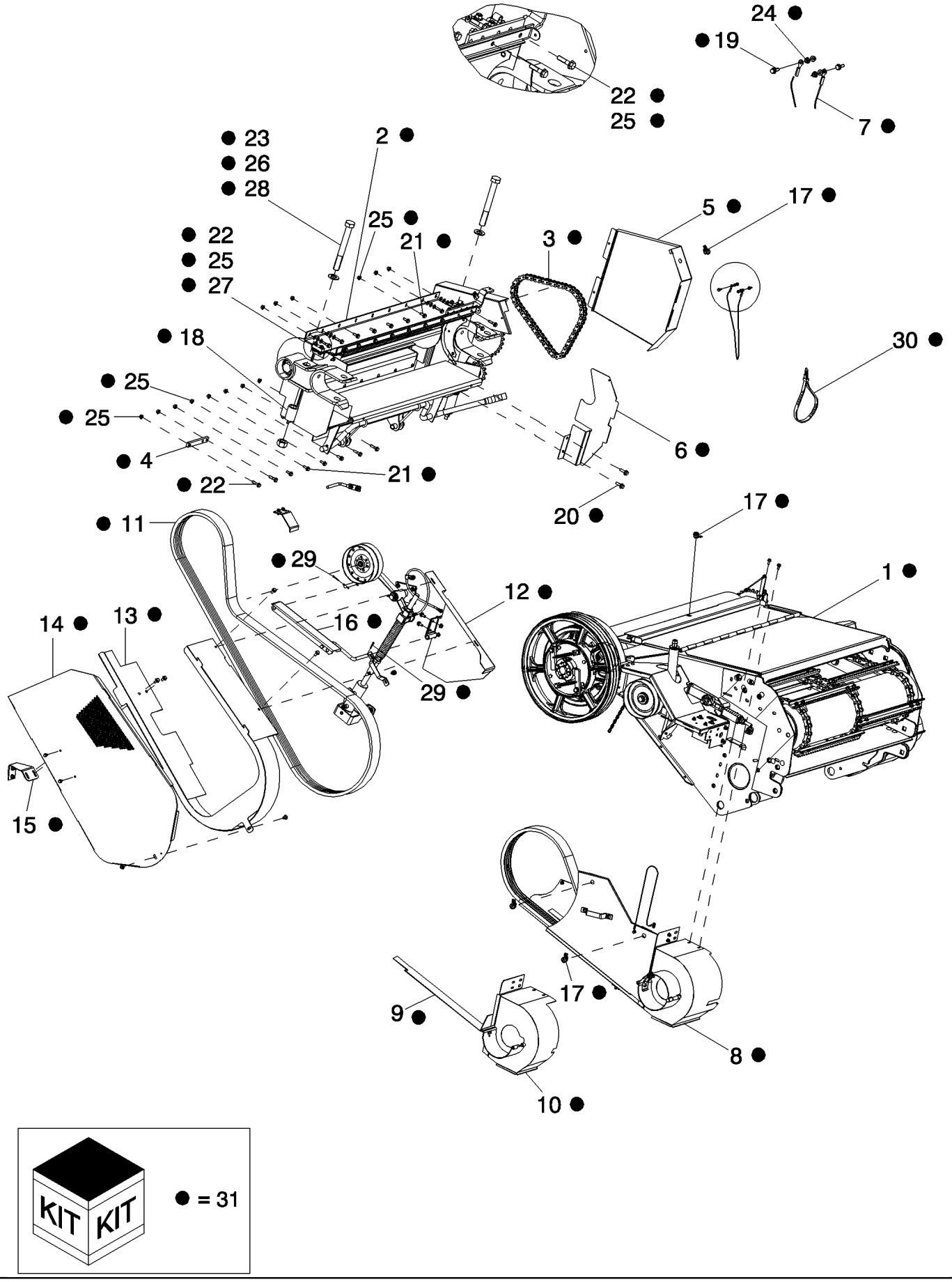

PDF created with pdfFactory trial version www.pdffactory.com

7088 AXIAL-FLOW COMBINE (EU) (4/08-)

09A-01A KIT, DIA, NON ROCK TRAP TO ROCK TRAP FEEDER ASSEMBLY

ссылка	Номер детали	Кол-во	Описание
1	87727253	1	Stone Trap
2	87727250	1	KIT, SERVICE, Trap
3	87755504	1	CHAIN, RC80, 52 Pitch
4	87709107	2	SPACER, Rock Trap
5	84128122	1	SHEET METAL, Cover, Stone Trap
6	87755523	1	SHEET METAL, Front, Stone Trap
7	132657A2	1	CABLE, Reverser Shield Tether
8	NSS	1	NOT SERVICED SEPARATELY, DRIVE ASSEMBLY, Header, Stone Trap, Single Speed
9	87720877	1	COVER ASSY, Belt, 54 Inch, 2-Speed
10	87720873	1	SHIELD, Jackshaft, Stone Trap, 2-Speed
11	87629601	1	BELT, Feeder Drive With Rock Trap
12	87712044	1	BRACKET, Feeder Belt Guide, 54 Inch
13	87712050	1	BRACKET, Guide Assembly, Feeder Drive Belt, 54 Inch
14	84133932	1	COVER ASSY, Feeder Drive Belt, 54 Inch
15	87712056	1	BRACKET, Feeder Belt Guide, Rear, 54 Inch
16	87377053	1	BRACKET, Feeder Belt With Rock Trap
17	135476A1	4	LOCK, Shield
18	87499320	2	SPACER, Feeder Retainer Bolt
19	87675531	2	BOLT,
20	87695414	2	BOLT,
21	87698836	9	BOLT,
22	87698839	10	BOLT,
23	87497922	2	BOLT,
24	86050300	4	NUT, M6 x 1, Flg, Cl10,
25	86050279	16	NUT, M10 x 1.5, Flg, Cl 10,
26	87752066	2	NUT,
27	140045	12	WASHER, SPRING, Belleville, M10,
28	86511329	2	WASHER,
29	432-1216	2	PIN, SPLIT (COTTER), 3/16" x 1",
30	L11541	2	STRAP, CABLE,
31	87726794	1	DIA KIT, HARVESTER, Non Rock Trap to Rock Trap Feeder Assembly, Inc. 1-30

PDF created with pdfFactory trial version www.pdffactory.com

09A-01B KIT, DIA, DRIVE ASSEMBLY, ROCK TRAP, RC80, 18T, 35T

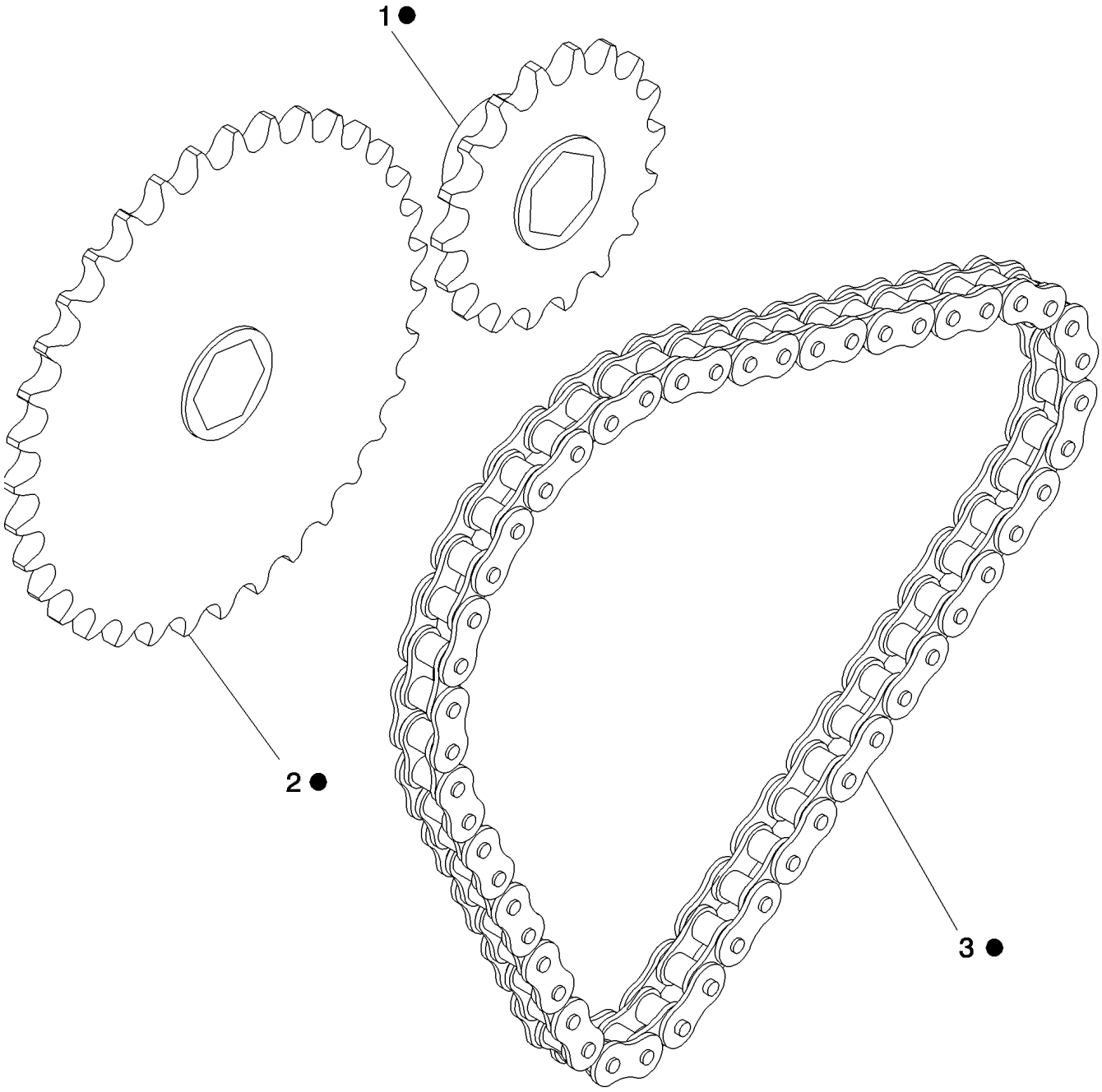

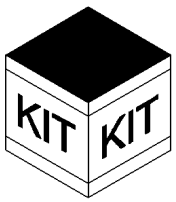

● = 4

PDF created with pdfFactory trial version www.pdffactory.com

7088 AXIAL-FLOW COMBINE (EU) (4/08-)

09A-01B KIT, DIA, DRIVE ASSEMBLY, ROCK TRAP, RC80, 18T, 35T

ссылка	Номер детали	Кол-во	Описание
1	87674271	1	SPROCKET ASSY., Beater Driven, 18T
2	87674274	1	SPROCKET ASSY., Beater Driven, 35T
3	87755504	1	CHAIN, Rock Trap, 46 Pitch
4	87690735	1	DIA KIT, HARVESTER, Drive Assembly, Rock Trap, RC80, 18T,35T, Inc. 1-3

PDF created with pdfFactory trial version www.pdffactory.com

7088 AXIAL-FLOW COMBINE (EU) (4/08-)

09A-02 FEEDER, CONVEYOR, WITHOUT ROCK TRAP

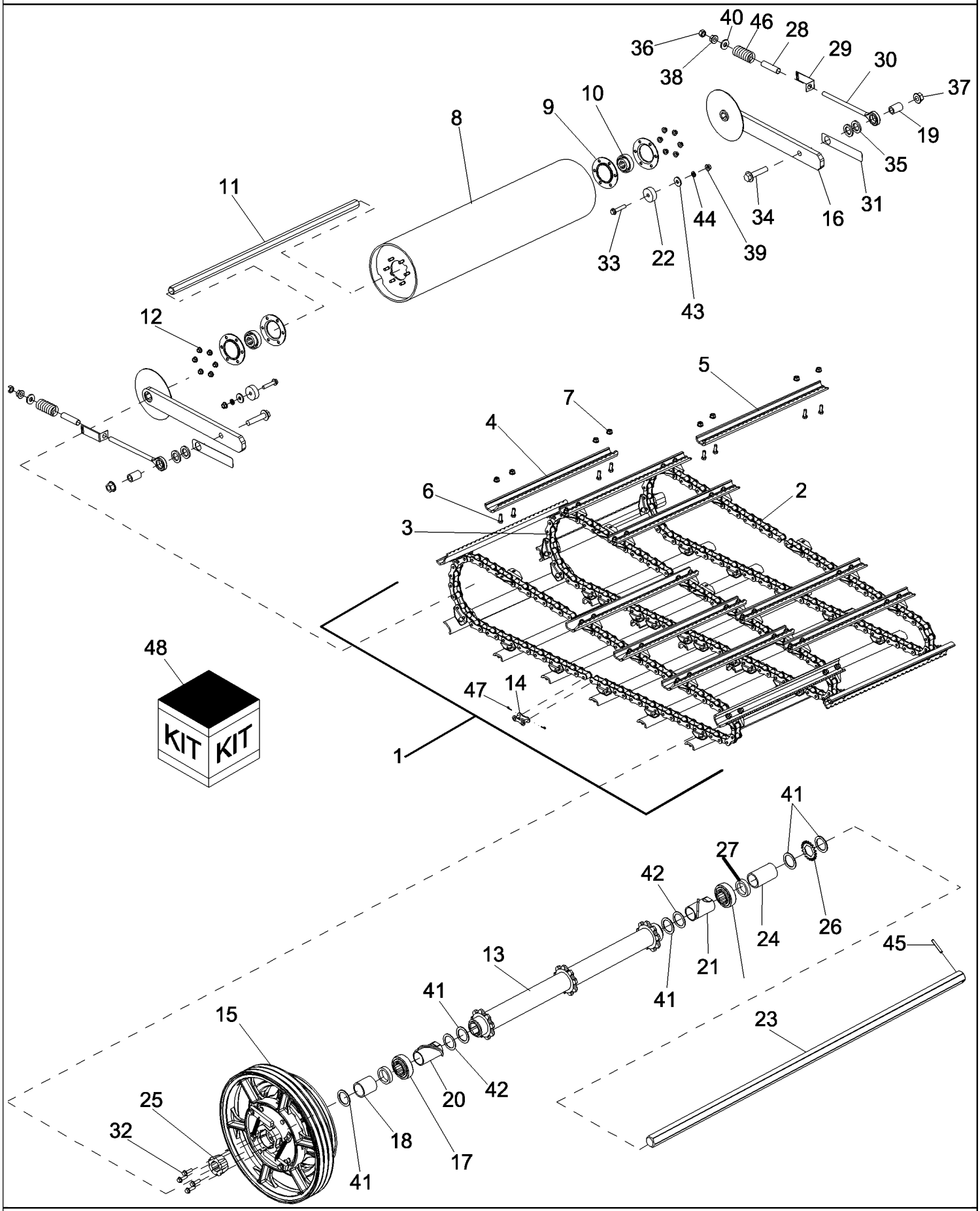

PDF created with pdfFactory trial version www.pdffactory.com

7088 AXIAL-FLOW COMBINE (EU) (4/08-)

09A-02 FEEDER, CONVEYOR, WITHOUT ROCK TRAP

ссылка	Номер детали	Кол-во	Описание
1	84148072	1	CONVEYOR ASSY., Feeder 60 Inch Serrated Slat, Inc. 2 - 7
2	118661A1	2	CHAIN, 557 Roller, 60 Inch Feeder, Outer
3	1989529C1	1	CHAIN, 557 Roller, 60 Inch, Center
4	NS	12	NOT SERVICED, SLAT, Conveyor, Right Hand, Serrated
4	84151020	1	PACKAGE,SERVICE, Conveyor, Right Hand, Inc. Qty 1 Slat, Qty 4 Ref. 6, 7
5	NS	12	NOT SERVICED, SLAT, Conveyor, Left Hand, Serrated
5	84151018	1	PACKAGE,SERVICE, Conveyor, Left Hand, Inc. Qty 1 Slat, Qty 4 Ref. 6, 7
6	9861444	96	BOLT, Hex, M10 x 20, 10.9, Full Thd,
7	84184082	96	NUT, LOCK,
8	87722161	1	DRUM,
9	87667404	4	BEARING, BALL,
10	121602	2	BEARING, BALL,
11	87323562	1	SHAFT,
12	86050279	12	NUT, M10 x 1.5, Flg, Cl 10,
13	84122242	1	SPROCKET ASSY., Feeder Conveyor
14	1324294C1	3	LINK, CONNECTING,
15	NSS	1	NOT SERVICED SEPARATELY, CLUTCH, Feeder Conveyor Without Rock Trap, See Figure 09A-02A
16	87687030	2	ARM ASSY., Conveyor
17	87620467	2	BEARING ASSY,
18	87557066	1	SPACER, Clutch Hub
19	87688473	2	SPACER, Arm
20	87751613	1	SPACER, Spocket Cleanout, Right Hand
21	87751611	1	SPACER, Spocket Cleanout, Left Hand
22	87389815	2	SPACER, Feeder Drum Stop
23	84174008	1	SHAFT, Feeder Conveyor
24	87678514	1	SPACER, Spocket End
25	87619287	1	HOUSING,
26	87557056	1	DISC, NOTCHED, Feeder Speed Pickup
27	87620468	2	BUSHING, LARGE,
28	84147444	2	SPACER, Spring Tensioner
29	84128484	2	BRACKET, Indicator
30	84158123	2	EYEBOLT,
31	87691301	2	STRAP, Feeder Side
32	87030508	4	BOLT, Hex Flg, M12 x 30, 10.9, Full Thd,
33	84148135	2	BOLT,
34	84163827	2	BOLT,
35	495-82234	4	WASHER, 1 9/32" x 2" x .234",
36	392530	2	NUT, M16, Cl 10,
37	86512499	2	NUT, M20 x 2.5, Flg, Cl 10,
38	86512498	2	NUT, M16 x 2, Flg, Cl 10,

PDF created with pdfFactory trial version www.pdffactory.com

ссылка	Номер детали	Кол-во	Описание
39	86512497	2	NUT, M12 x 1.75, Flg, Cl 10,
40	325594	2	WASHER, M17 x 40 x 5 Thk,
41	87690483	AR	WASHER,
42	87690482	AR	WASHER,
43	495-81162	2	WASHER, 17/32" x 1 1/2" x .179",
44	492-11050	2	WASHER, LOCK, 1/2",
45	87016664	1	PIN, M12 x 70, Coiled,
46	84075179	2	SPRING,
47	1329837C2	6	PIN,
48	84192309	1	PACKAGE,SERVICE, Conveyor Feeder Hardware Service Pack, Inc. 426-616 Bolt Qty 100, 84184082 Nut Qty 100

PDF created with pdfFactory trial version www.pdffactory.com

09A-02A CLUTCH, FEEDER CONVEYOR, WITHOUT ROCK TRAP

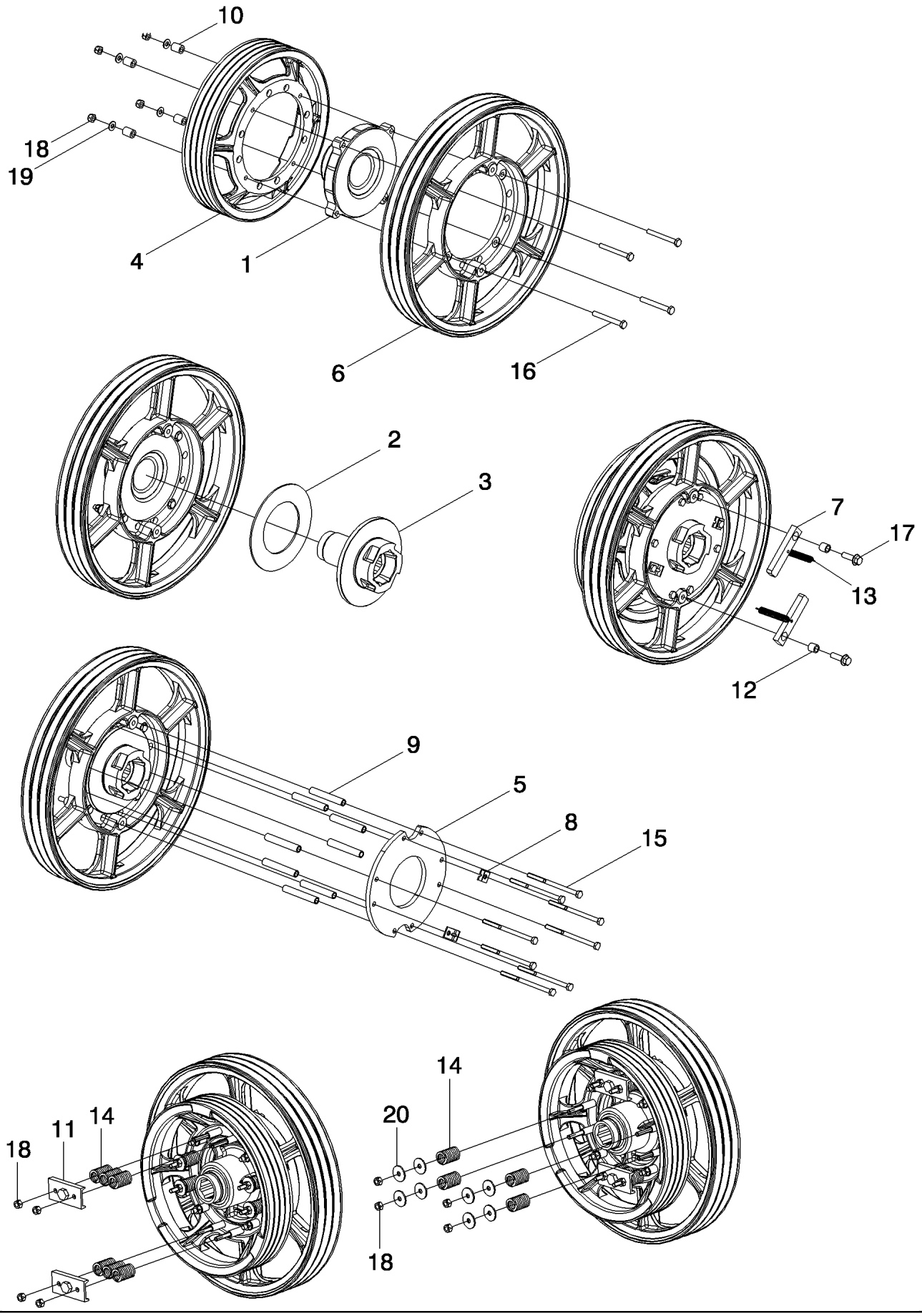

PDF created with pdfFactory trial version www.pdffactory.com

7088 AXIAL-FLOW COMBINE (EU) (4/08-)

09A-02A CLUTCH, FEEDER CONVEYOR, WITHOUT ROCK TRAP

ссылка	Номер детали	Кол-во	Описание
1	87543658	1	HOUSING ASSY., Friction Clutch, Outer
2	181579C1	2	LINING,
3	84124122	1	HOUSING, Clutch, Feeder Conveyor, Inner
4	87665207	1	PULLEY, Feeder Friction Clutch
5	87726043	1	PLATE ASSY., Outer, Feeder Reverser Clutch
6	87729260	1	PULLEY, Feeder Clutch Outer
7	87730813	2	BAR, Ratchet, Feeder Reverser Clutch
8	86988966	2	CLIP, Spring Mounting
9	87386411	8	SPACER, Feeder Friction Clutch
10	87374324	4	SPACER, Drive Lug
11	1315316C1	2	SUPPORT, Slip Clutch Spring Retainer
12	87752993	2	BUSHING, DRIVE, Reverser Ratchet
13	86989592	2	SPRING,
14	1305692C2	10	SPRING, Feeder Clutch
15	87665088	8	BOLT,
16	86508620	4	BOLT, Hex, M10 x 90, 10.9,
17	87695413	2	BOLT,
18	86512554	12	NUT, LOCK, M10 x 1.5, Cl 10,
19	140045	4	WASHER, SPRING, Belleville, M10,
20	495-81143	8	WASHER, 13/32" x 1 1/2" x .120",

PDF created with pdfFactory trial version www.pdffactory.com

09A-03 FEEDER, PIVOT IDLER

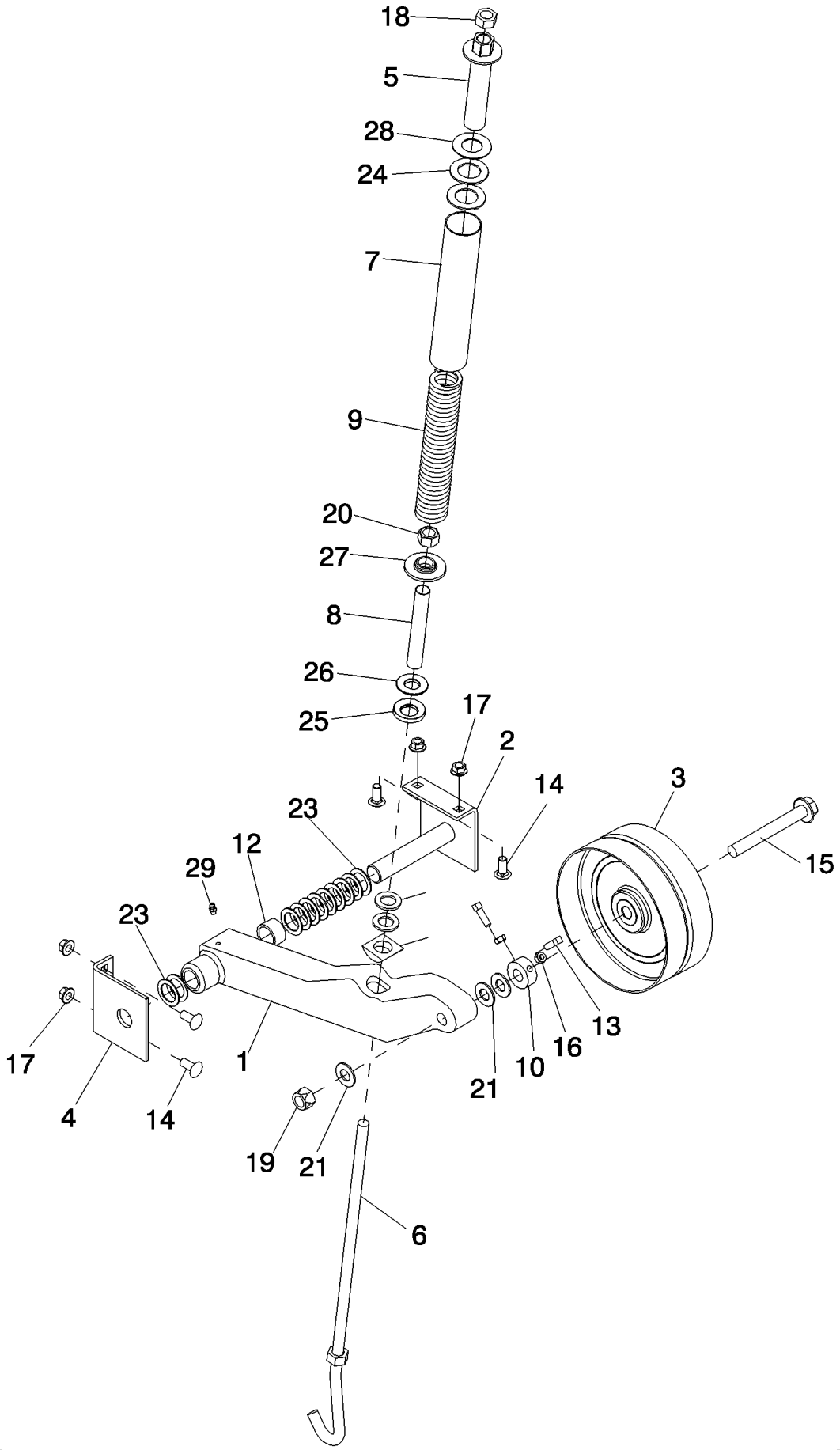

PDF created with pdfFactory trial version www.pdffactory.com

7088 AXIAL-FLOW COMBINE (EU) (4/08-)

09A-03 FEEDER, PIVOT IDLER

ссылка	Номер детали	Кол-во	Описание
1	87653936	1	ARM, Header Drive Idler
2	87653934	1	SHAFT ASSY., With Idler Pivot
3	176579C1	1	PULLEY, Idler
4	87653932	1	SUPPORT, Idler
5	87653940	1	HOUSING ASSY., Tensioner, Feeder Drive
6	87653938	1	HOOK, LATCH, Pulley Idler Tensioner
7	389973A2	1	TUBE, Pulley Idler
8	87706764	1	SLEEVE, Jackshaft Tensioner
9	389972A2	1	SPRING, Pulley Idler
10	87653930	1	BUSHING, DRIVE, Idler Pulley
11	413984A1	1	PIVOT, Rock Trap Idler Bolt
12	87036419	1	SPACER, 1" Pipe x 3/4",
13	87656135	2	SCREW,
14	87682391	4	BOLT, Short NK, M10 x 25, Cl 10.9,
15	87028051	1	BOLT,
16	824-1408	2	NUT, M8 x 1.25, Cl 10,
17	86050279	4	NUT, M10 x 1.5, Flg, Cl 10,
18	100020	1	NUT, M16, Cl 8,
19	86512555	1	NUT, LOCK, M16 x 2, Cl 10,
20	87653929	1	NUT,
21	495-11066	3	WASHER, 5/8", SAE,
22	87016606	2	WASHER, M18 x 34 x 3,
23	412568	11	WASHER, M27 x 37 x 1 Thk,
24	895-30105	2	WASHER, M27 x 50 x 2.5,
25	416749A1	1	WASHER,
26	416747A1	1	WASHER,
27	389974A1	1	WASHER,
28	413528A1	1	WASHER,
29	219-87	1	NIPPLE, LUBE, 1/4"-28 x .56" lg, Self-Tap,

PDF created with pdfFactory trial version www.pdffactory.com

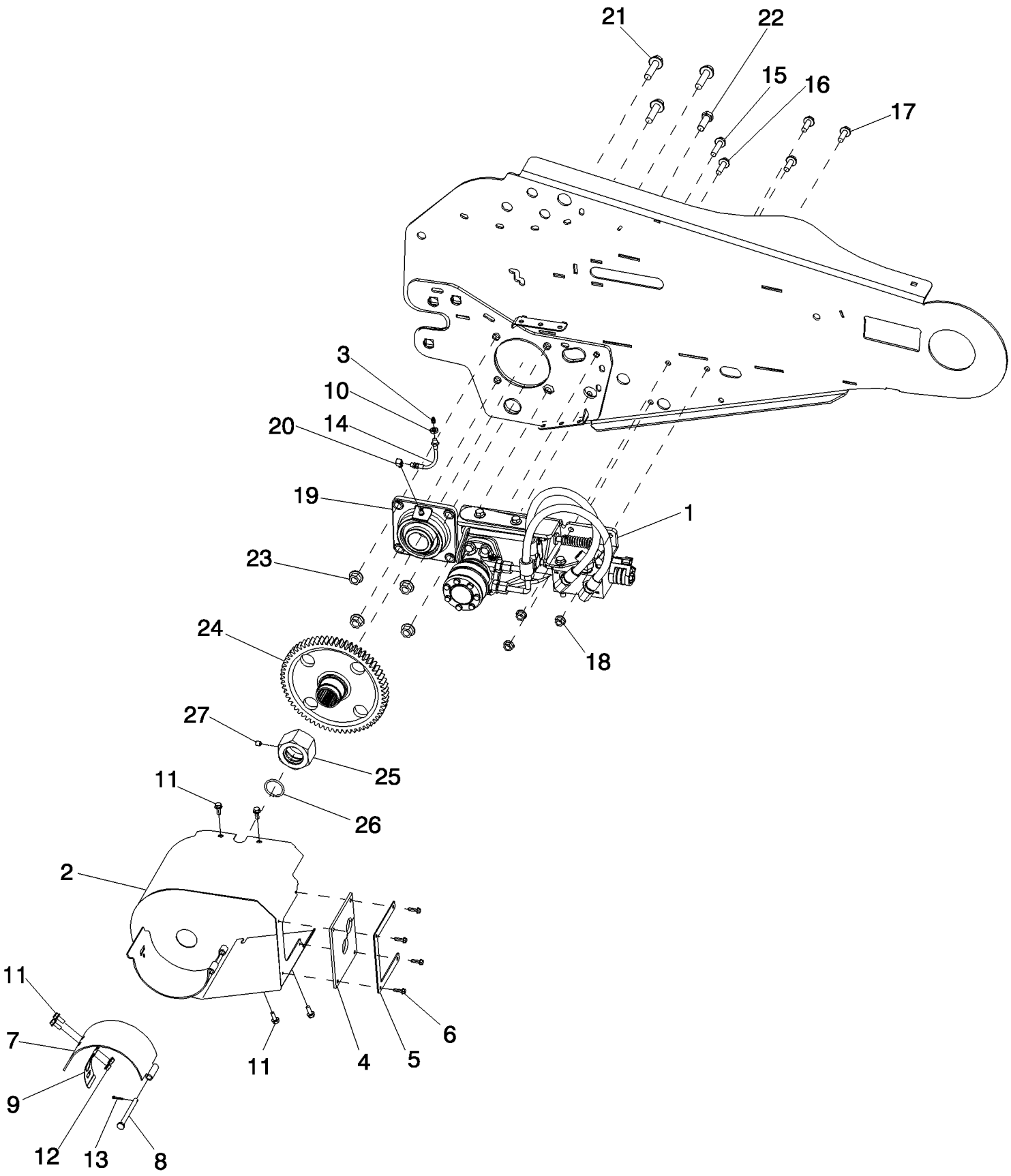

PDF created with pdfFactory trial version www.pdffactory.com

7088 AXIAL-FLOW COMBINE (EU) (4/08-)

09A-04 FEEDER, REVERSER

ссылка	Номер детали	Кол-во	Описание
1	REF	1	INSTRUCTION, REVERSER ASSY, See Figure 09A-05
2	87647057	1	SHIELD, Reverser
3	219-8	1	NIPPLE, LUBE, 1/4"-28 NPT x .54" lg,
4	87646191	1	CANVAS,
5	87357510	1	BRACKET, Reverser Shield
6	87010469	4	SCREW, SELF TAPPING, Hex Wash Hd, M6.3 x 25,
7	87338195	1	SHIELD, Jackshaft, Right Hand Upper
8	86605625	1	PIN, CLEVIS,
9	86638316	1	LATCH,
10	F53473	1	NUT,
11	87656137	6	BOLT, Hex Flg, M8 x 20, 10.9, Full Thd,
12	86507066	2	NUT, M8 x 1.25, Flg, Cl 10,
13	130003	1	PIN, SPLIT (COTTER), M3.2 x 20,
14	87358704	1	HOSE ASSY.,
15	87670764	1	BOLT,
16	86705431	1	BOLT,
17	86705430	3	BOLT,
18	86512497	3	NUT, M12 x 1.75, Flg, Cl 10,
19	241929A2	1	BEARING ASSY, Feeder Jackshaft
20	219-82	1	ELBOW, 90є, 1/8"-27,
21	87675533	3	BOLT,
22	86508624	1	BOLT, Hex, M16 x 45, 10.9,
23	86512498	4	NUT, M16 x 2, Flg, Cl 10,
24	87354295	1	GEAR, Reverser Driven, 65T
25	87354318	1	NUT, Jackshaft Retaining
26	87354319	1	RING,
27	300480	1	SET SCREW, Hex Soc, M10 x 12, Cup Pt,
28	REF	1	INSTRUCTION, FEEDER, Left Hand Side

PDF created with pdfFactory trial version www.pdffactory.com

09A-05 REVERSER ASSEMBLY, FEEDER/HEADER

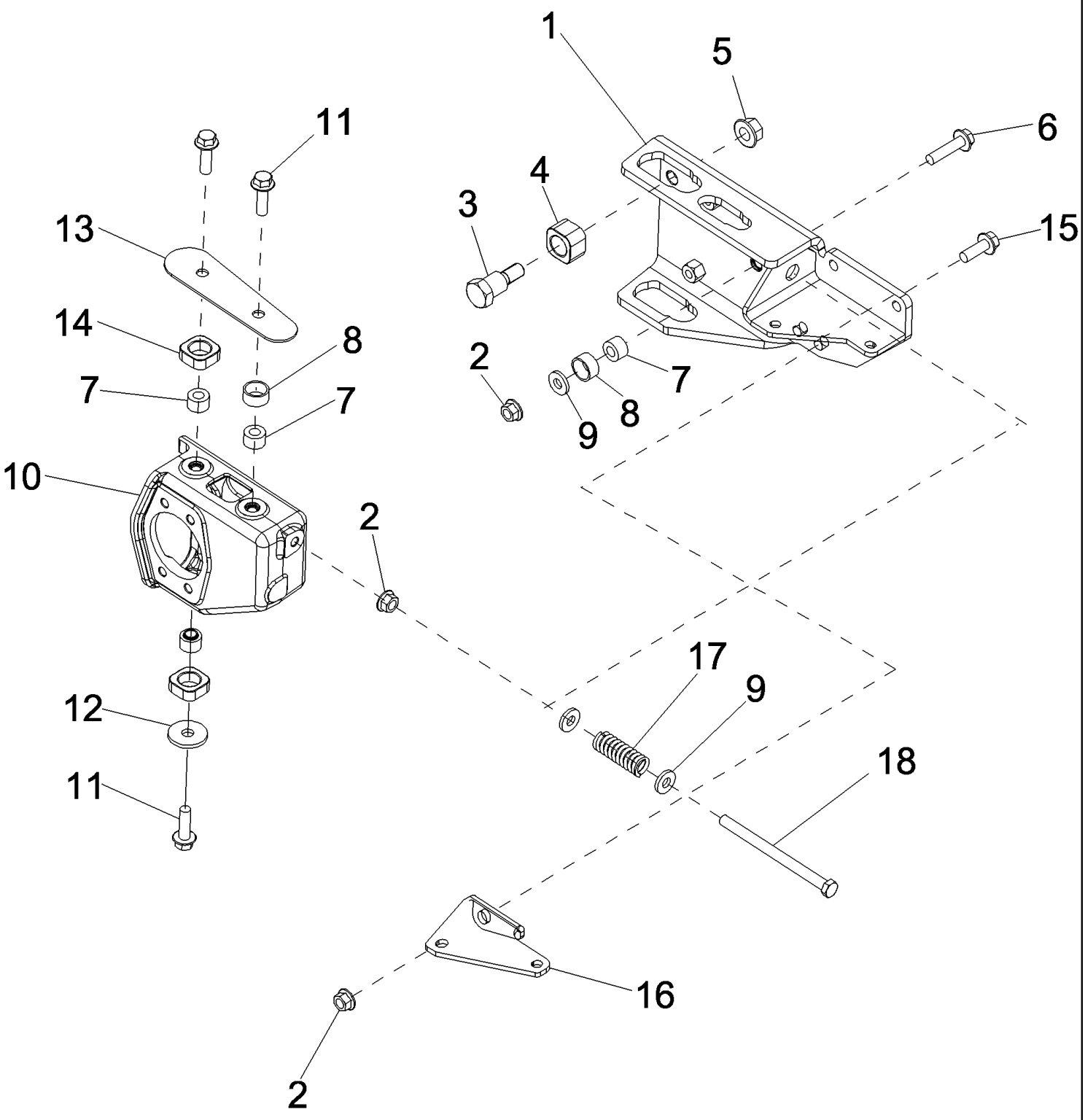

PDF created with pdfFactory trial version www.pdffactory.com

7088 AXIAL-FLOW COMBINE (EU) (4/08-)

09A-05 REVERSER ASSEMBLY, FEEDER/HEADER

ссылка	Номер детали	Кол-во	Описание
1	87654414	1	FRAME, Reverser Guide
2	86512497	3	NUT, M12 x 1.75, Flg, Cl 10,
3	87654418	1	BOLT,
4	87602198	1	BUSHING, LARGE, Guide
5	86512498	1	NUT, M16 x 2, Flg, Cl 10,
6	87670764	1	BOLT,
7	87602190	4	BUSHING, LARGE, Inner, Guide Support
8	87602186	2	BUSHING, LARGE, Guide
9	12648501	3	WASHER, M12 x 28 x 4,
10	87654417	1	CARRIER, Reverser Motor
11	87695413	3	BOLT,
12	9511052	1	WASHER, M12 x 44 x 4,
13	87611718	1	PLATE, Outer Guide Cover Upper
14	87602200	2	BUSHING, LARGE,
15	87695414	1	BOLT,
16	87657886	1	BRACKET, Cylinder Mounting Lower
17	87602201	1	SPRING, COIL, Return, Inner Frame
18	87354302	1	BOLT,

PDF created with pdfFactory trial version www.pdffactory.com

09A-06 FEEDER, TERRAIN TRACKER® ADAPTER, SINGLE SPEED

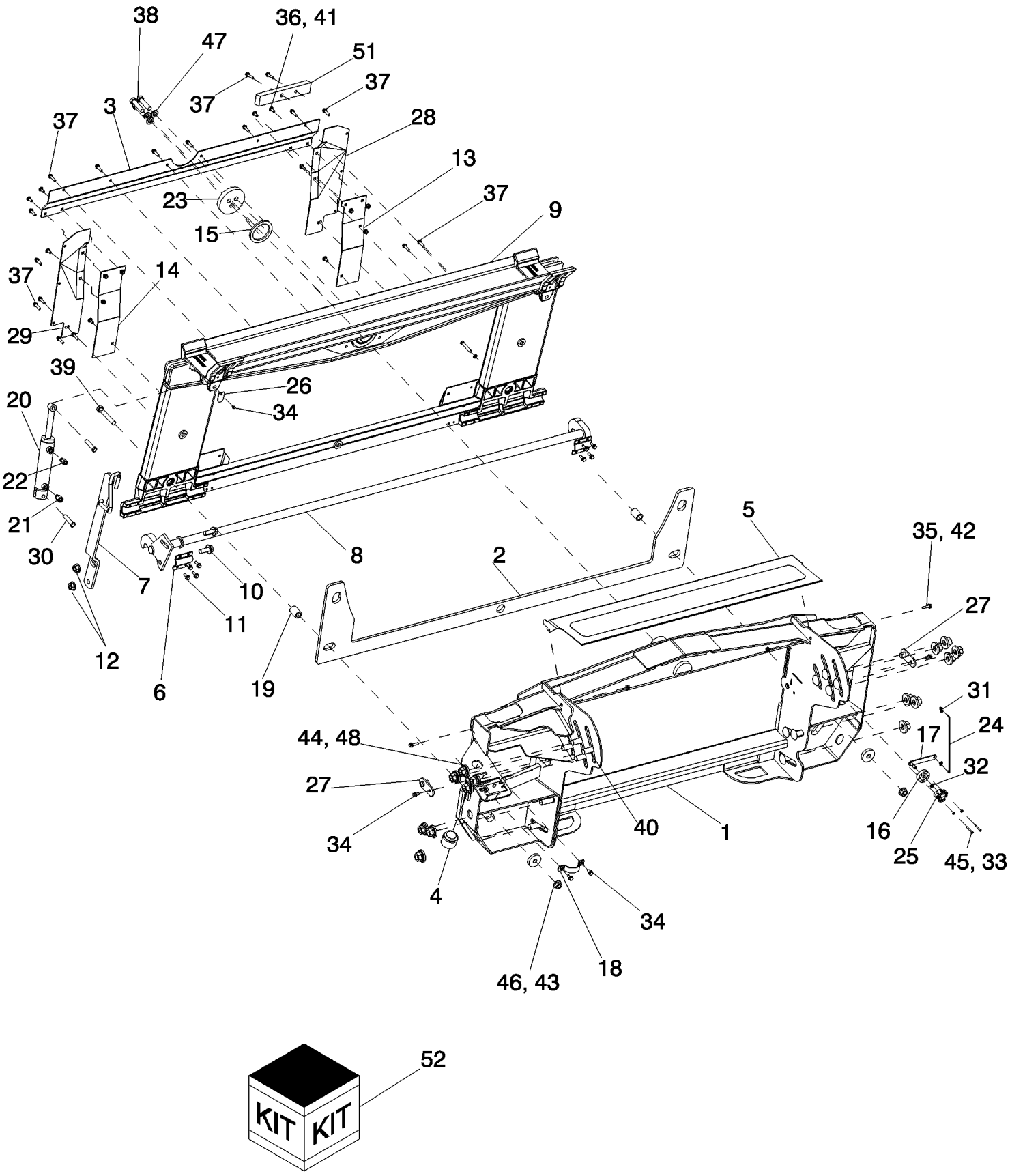

PDF created with pdfFactory trial version www.pdffactory.com

7088 AXIAL-FLOW COMBINE (EU) (4/08-)

09A-06 FEEDER, TERRAIN TRACKER® ADAPTER, SINGLE SPEED

ссылка	Номер детали	Кол-во	Описание
1	87538393	1	ADAPTER, Feeder Half, Lateral Tilt
2	NSS	1	NOT SERVICED SEPARATELY, FRONT SHEET
3	87658628	1	DEFLECTOR, Crop Front
4	87105683	1	CAP, Protection
5	87312135	1	SHEET ASSY., Top
6	NSS	2	NOT SERVICED SEPARATELY, CLAMP
7	87583643	1	LEVER ASSY., Front Frame
8	87583645	1	LATCH ASSY., Front Frame
9	87571654	1	FRAME ASSY, Front
10	87495304	2	BOLT,
11	87656137	8	BOLT, Hex Flg, M8 x 20, 10.9, Full Thd,
12	87016581	2	NUT, LOCK, M16 x 2, Flg, Cl 10,
13	84158878	1	DEFLECTOR, Crop Front, Right Hand
14	84158872	1	DEFLECTOR, Crop Front, Left Hand
15	NSS	1	NOT SERVICED SEPARATELY, WASHER, Thrust
16	87362420	1	MOUNT,
17	87643243	1	PLATE ASSY.,
18	NSS	1	NOT SERVICED SEPARATELY, U-BRACKET
19	87107672	2	SPACER,
20	87282646	1	CYLINDER, Hydraulic
21	87387849	1	CONNECTOR, HYD.,
22	87387848	1	CONNECTOR, HYD.,
23	NSS	1	NOT SERVICED SEPARATELY, PLATE, Retaining
24	87643245	1	LINK,
25	87330286	1	SENSOR,
26	87312141	1	PLATE,
27	NSS	2	NOT SERVICED SEPARATELY, BRACKET
28	87658627	1	DEFLECTOR, Crop Front, Right Hand
29	87658626	1	DEFLECTOR, Crop Front, Left Hand
30	87312143	2	PIN,
31	9821714	2	CLIP, Rod End
32	86000439	1	RING, SNAP, #37, Ext,
33	87384106	2	BOLT, Hex, M4 x 40, 8.8,
34	87681207	5	BOLT,
35	87030775	2	BOLT, Hex Flg, M8 x 30, 10.9, Full Thd,
36	86507486	8	BOLT, CARRIAGE, Short NK, M8 x 20, Cl8.8, Full Thd,
37	87673845	18	SCREW,
38	11119231	3	BOLT,
39	86541970	2	BOLT, Hex, M16 x 100, 10.9,
40	86981478	14	BOLT, CARRIAGE, Short NK, M20 x 60, Cl10.9,
41	86507066	8	NUT, M8 x 1.25, Flg, Cl 10,

PDF created with pdfFactory trial version www.pdffactory.com

ссылка	Номер детали	Кол-во	Описание
42	87681210	2	NUT, Hex, M8, Cl 10,
43	87016581	2	NUT, LOCK, M16 x 2, Flg, Cl 10,
44	86512499	14	NUT, M20 x 2.5, Flg, Cl 10,
45	322355	2	WASHER, Belleville, M4,
46	913347	2	WASHER, M17 x 56 x 11 Thk,
47	86625266	3	WASHER, M17.5 x 30 x 4, HT,
48	86592703	14	WASHER, M20 x 50 x 6, HT,
50	87742285	1	HARNESS, WIRE, Feeder Tilt Adapter (Not Shown)
51	87693080	2	PLATE, Strip Off
52	87727344	1	DIA KIT, HARVESTER, Terrain Tracker Lateral Tilt, 5088

PDF created with pdfFactory trial version www.pdffactory.com

09A-07 FEEDER DRIVE ASSEMBLY, WITHOUT ROCK TRAP

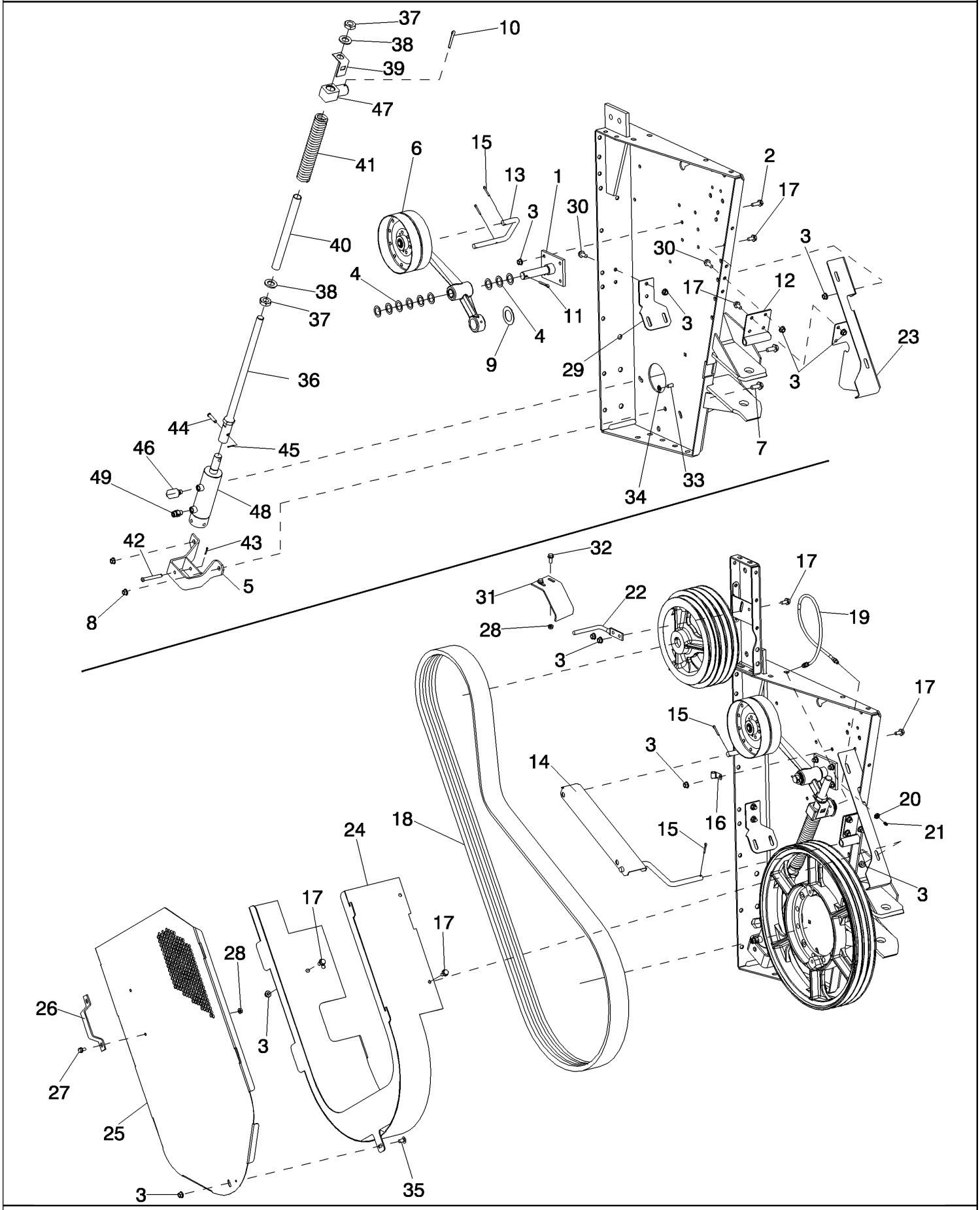

PDF created with pdfFactory trial version www.pdffactory.com

7088 AXIAL-FLOW COMBINE (EU) (4/08-)

09A-07 FEEDER DRIVE ASSEMBLY, WITHOUT ROCK TRAP

ссылка	Номер детали	Кол-во	Описание
1	87395750	1	SHAFT ASSY., Feeder Drive Idler Pivot
2	87698837	4	BOLT,
3	86050279	21	NUT, M10 x 1.5, Flg, Cl 10,
4	495-81069	9	WASHER, 1 1/32" x 1 1/2" x .060",
5	84170096	1	SUPPORT, Cylinder Anchor
6	87519419	1	Feeder Drive Idler
7	87030508	2	BOLT, Hex Flg, M12 x 30, 10.9, Full Thd,
8	86512497	2	NUT, M12 x 1.75, Flg, Cl 10,
9	495-81225	1	WASHER, 1 17/32" x 2 1/2" x .060",
10	432-1240	1	PIN, SPLIT (COTTER), 3/16" x 2 1/2",
11	432-1624	1	PIN, SPLIT (COTTER), 1/4" x 1 1/2",
12	87712042	1	BRACKET, Belt Guide Pivot
13	116032A1	1	HOOK, Belt Retainer
14	87377051	1	BRACKET, Feeder Belt Without Rock Trap
15	432-1216	4	PIN, SPLIT (COTTER), 3/16" x 1",
16	516-23127	1	CLAMP, J, 9/16" Insul, 3/8" Bolt,
17	87698835	9	BOLT,
18	87629602	1	BELT, Feeder Drive Without Rock Trap
19	937781R92	1	HOSE, Grease Line
20	F53473	1	NUT,
21	219-8	1	NIPPLE, LUBE, 1/4"-28 NPT x .54" lg,
22	87373945	1	ROD, Feeder Drive Belt
23	87712046	1	BRACKET, Feeder Belt Guide, 60 Inch
24	87712054	1	BRACKET, Feeder Drive Belt, 60 Inch
25	84133930	1	COVER ASSY, Feeder Drive Belt, 60 Inch
26	87735697	1	LATCH, Door
27	87681207	2	BOLT,
28	86507066	4	NUT, M8 x 1.25, Flg, Cl 10,
29	87712058	1	BRACKET, Feeder Belt Guide, Rear, 60 Inch
30	87698836	4	BOLT,
31	87742029	1	SUPPORT, Upper, Belt Guide
32	87656137	2	BOLT, Hex Flg, M8 x 20, 10.9, Full Thd,
33	87682391	3	BOLT, Short NK, M10 x 25, Cl 10.9,
34	87698854	3	SCREW,
35	87682390	1	BOLT,
36	87737845	1	ROD ASSY., Feeder Drive Tightener
37	87034489	2	NUT,
38	86511328	2	WASHER, M24 x 34 x 4,
39	87758240	1	BRACKET, Separator Belt Tensioning Guide
40	84122776	1	BUSHING, LARGE, Feeder Drive Tension Rod
41	87739619	1	SPRING, COIL, Feeder Belt Clutch

PDF created with pdfFactory trial version www.pdffactory.com

7088 AXIAL-FLOW COMBINE (EU) (4/08-)

09A-07 FEEDER DRIVE ASSEMBLY, WITHOUT ROCK TRAP

ссылка	Номер детали	Кол-во	Описание
42	439-1652	1	PIN, HEADED, 3/8" x 3 1/4",
43	432-812	1	PIN, SPLIT (COTTER), 1/8" x 3/4",
44	427-6156	1	PIN, CLEVIS, 3/8" x 1 9/16",
45	432-612	1	PIN, SPLIT (COTTER), 3/32" x 3/4",
46	87016877	1	ELBOW, 90є, 13/16"-16 x 9/16"-18, Adj, ORFS,
47	84121816	1	PIVOT, Feeder Drive Arm
48	87710335	1	CYLINDER, Feeder Clutch
49	134713A1	1	VALVE, CHECK,
	87364303	1	KIT, SEALS, Cylinder

PDF created with pdfFactory trial version www.pdffactory.com

09A-08 DRIVE, HEADER, TERRAIN TRACKER®, SINGLE SPEED

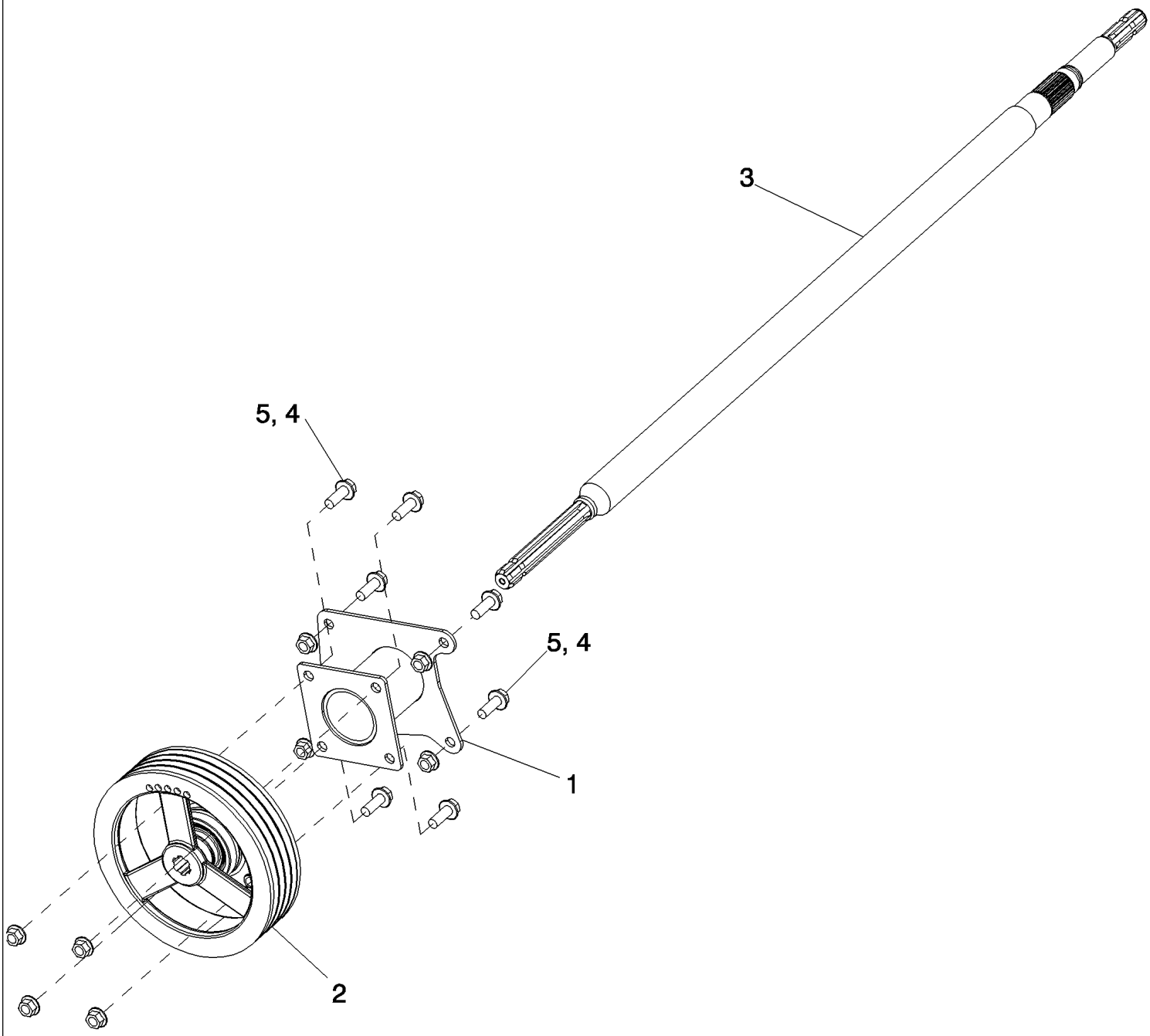

PDF created with pdfFactory trial version www.pdffactory.com

7088 AXIAL-FLOW COMBINE (EU) (4/08-)

09A-08 DRIVE, HEADER, TERRAIN TRACKER®, SINGLE SPEED

ссылка	Номер детали	Кол-во	Описание
1	87337216	1	SUPPORT ASSY., Bearing
2	391085A1	1	PULLEY, Feeder Jackshaft Driven
3	87354317	1	SHAFT, Header Drive
4	87698746	8	BOLT,
5	86512498	8	NUT, M16 x 2, Flg, Cl 10,

PDF created with pdfFactory trial version www.pdffactory.com

09A-09 SHIELDS, HEADER DRIVE,TERRAIN TRACKER®, SINGLE SPEED

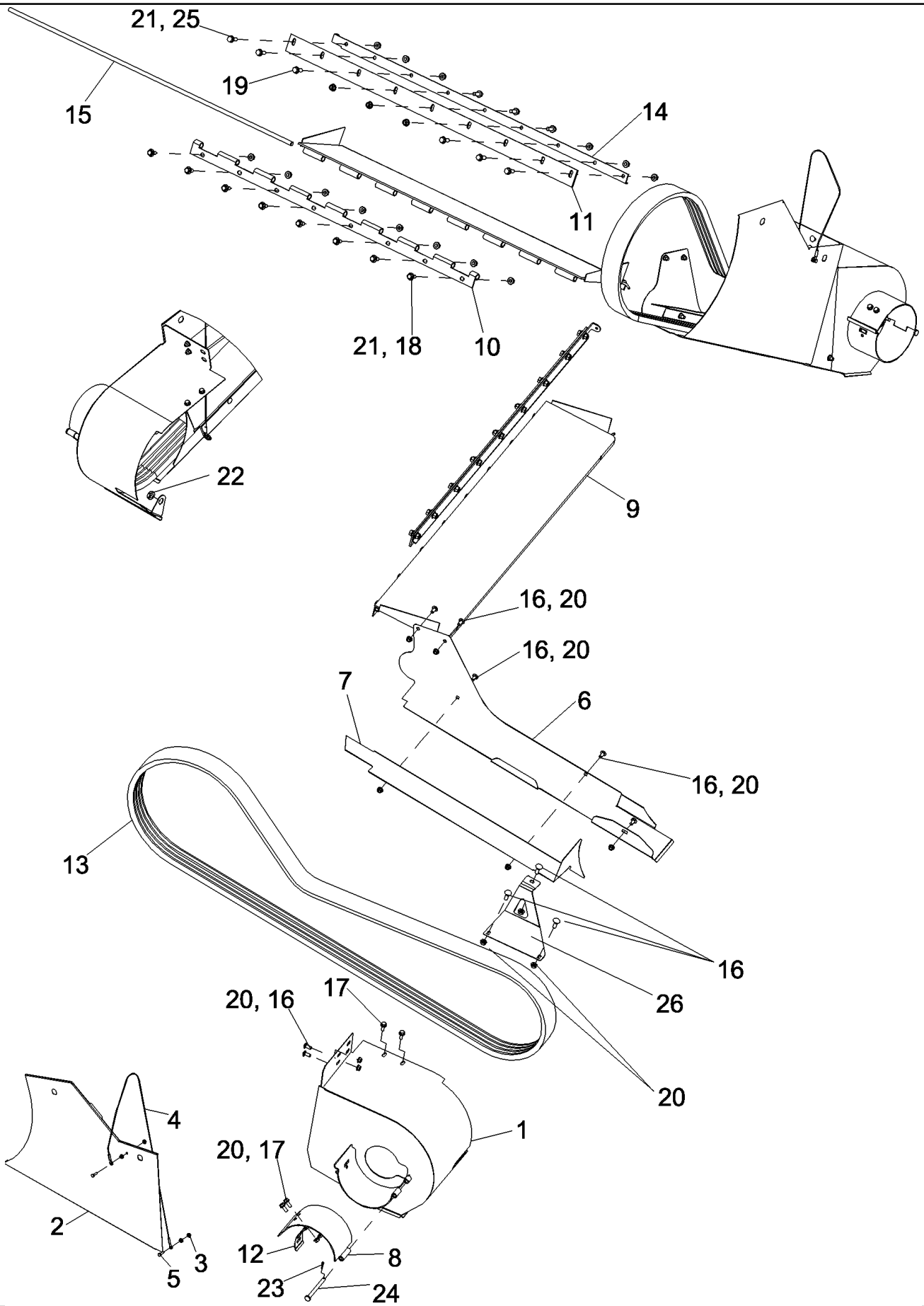

PDF created with pdfFactory trial version www.pdffactory.com

7088 AXIAL-FLOW COMBINE (EU) (4/08-)

09A-09 SHIELDS, HEADER DRIVE,TERRAIN TRACKER®, SINGLE SPEED

ссылка	Номер детали	Кол-во	Описание
1	87720933	1	SHIELD, Jackshaft, Single Speed
2	87754566	1	COVER ASSY, Feeder Drive, 60 Inch
3	9804276	4	NUT, M6 x 1, Flg, Cl 8,
4	132657A2	1	CABLE, Reverser Shield Tether
5	120100	2	BOLT, Hex, M6 x 20, 8.8,
6	84154697	1	COVER ASSY, Feeder Drive, 60 Inch
7	87720948	1	COVER ASSY, Belt, 60 Inch, Single Speed
8	87753756	1	SHIELD, Jackshaft, Right Hand Upper
9	87602131	1	DOOR, Feeder
10	193611C2	1	HINGE, Feed Plate
11	634248R2	1	SEAL, Feeder
12	86638316	1	LATCH,
13	87332161	1	BELT, Header Drive Without Rock Trap
14	87720413	1	SUPPORT, Feeder Top Seal Support
15	175931C1	1	ROD, Feed Door
16	87682383	10	BOLT,
17	87656137	4	BOLT, Hex Flg, M8 x 20, 10.9, Full Thd,
18	274249	8	BOLT, Hex Serr Flg, M10 x 20,
19	905-10025	7	BOLT, Hex Serr Flg, M10 x 25,
20	86507066	12	NUT, M8 x 1.25, Flg, Cl 10,
21	43435	14	NUT, M10, Flg Ser,
22	10717511	1	NUT, Thin, M16 x 2, Cl 04,
23	130003	1	PIN, SPLIT (COTTER), M3.2 x 20,
24	86605625	1	PIN, CLEVIS,
25	87698837	2	BOLT,
26	84154101	1	BRACKET, Header Drive, 60 Inch

PDF created with pdfFactory trial version www.pdffactory.com

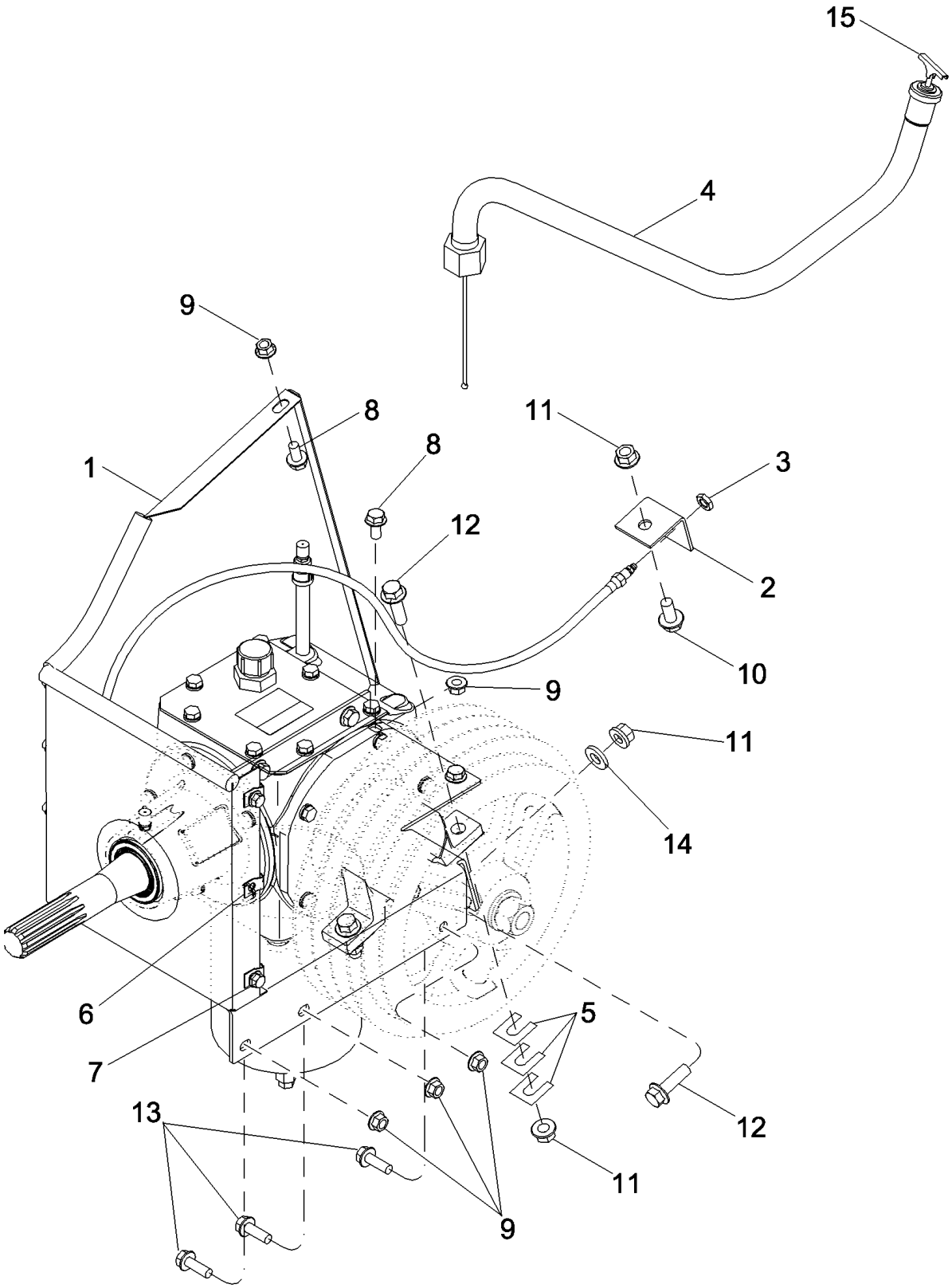

RI08C143

PDF created with pdfFactory trial version www.pdffactory.com

09A-10 GEAR CASE FEEDER AND CLEANING FAN DRIVE

ссылка	Номер детали	Кол-во	Описание
1	REF	1	INSTRUCTION, GEARBOX ASSEMBLY, Feeder Drive, See Figure 09A-11
2	87742027	1	BRACKET, Lube Hose
3	F53473	1	NUT,
4	87579601	1	TUBE ASSY., Feeder Gearbox Oil Fill
5	935915R1	AR	SHIM, Right Hand Bell Housing Support
6	86625074	3	NUT,
7	87656137	2	BOLT, Hex Flg, M8 x 20, 10.9, Full Thd,
8	87698835	3	BOLT,
9	86050279	7	NUT, M10 x 1.5, Flg, Cl 10,
10	87343550	1	BOLT,
11	86512497	4	NUT, M12 x 1.75, Flg, Cl 10,
12	87695413	3	BOLT,
13	87698837	4	BOLT,
14	86625256	1	WASHER, M12 x 28.5 x 4, HT,
15	87632904	1	GAUGE ASSY., Feeder Gearbox Oil Level

PDF created with pdfFactory trial version www.pdffactory.com

09A-11 GEARBOX ASSEMBLY, FEEDER DRIVE

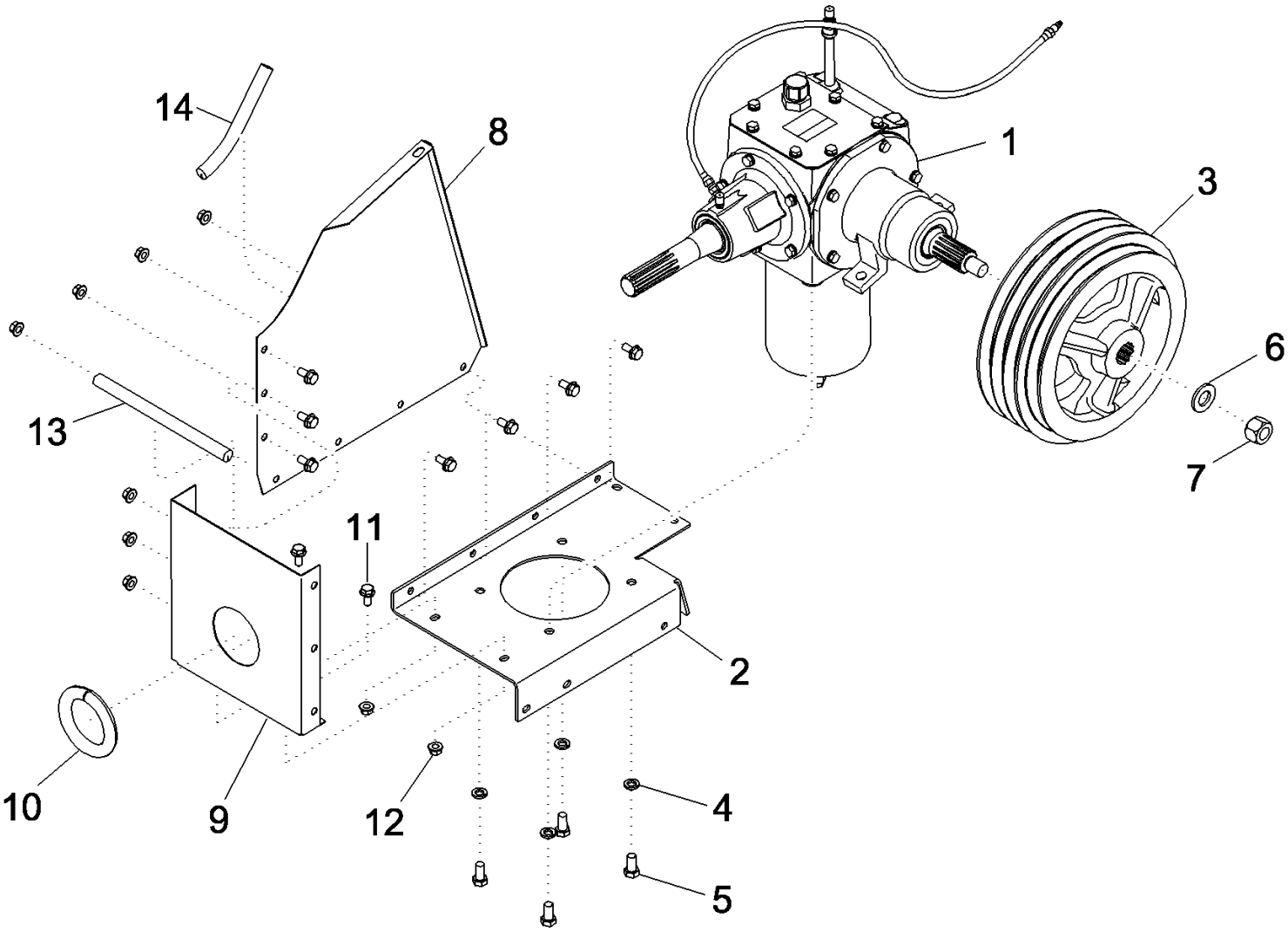

PDF created with pdfFactory trial version www.pdffactory.com

7088 AXIAL-FLOW COMBINE (EU) (4/08-)

09A-11 GEARBOX ASSEMBLY, FEEDER DRIVE

ссылка	Номер детали	Кол-во	Описание
1	REF	1	INSTRUCTION, GEAR CASE ASSEMBLY, Feeder Drive, See Figure 09A-12
2	87652873	1	SUPPORT ASSY., Forward Gearcase
3	87624862	1	PULLEY, Forward Drive
4	492-11050	4	WASHER, LOCK, 1/2",
5	413-816	4	BOLT, Hex, 1/2"-13 x 1", G5, Full Thd,
6	496-21094	1	WASHER, 15/16" x 1 3/4" x .179", HDN,
7	87301257	1	NUT, LOCK, 7/8"-14, GC,
8	87702575	1	SUPPORT ASSY., Forward Gearbox
9	87575615	1	SUPPORT ASSY., Forward Gearbox, Rear
10	191496C1	1	STRIP, Gearbox Support, 300 mm
11	87698835	9	BOLT,
12	86050279	9	NUT, M10 x 1.5, Flg, Cl 10,
13	191497C1	1	STRIP, Gearbox Support, 270 mm
14	87579999	1	SEAL, Gearbox Support, 190 mm

PDF created with pdfFactory trial version www.pdffactory.com

09A-12 GEAR CASE ASSEMBLY, FEEDER DRIVE

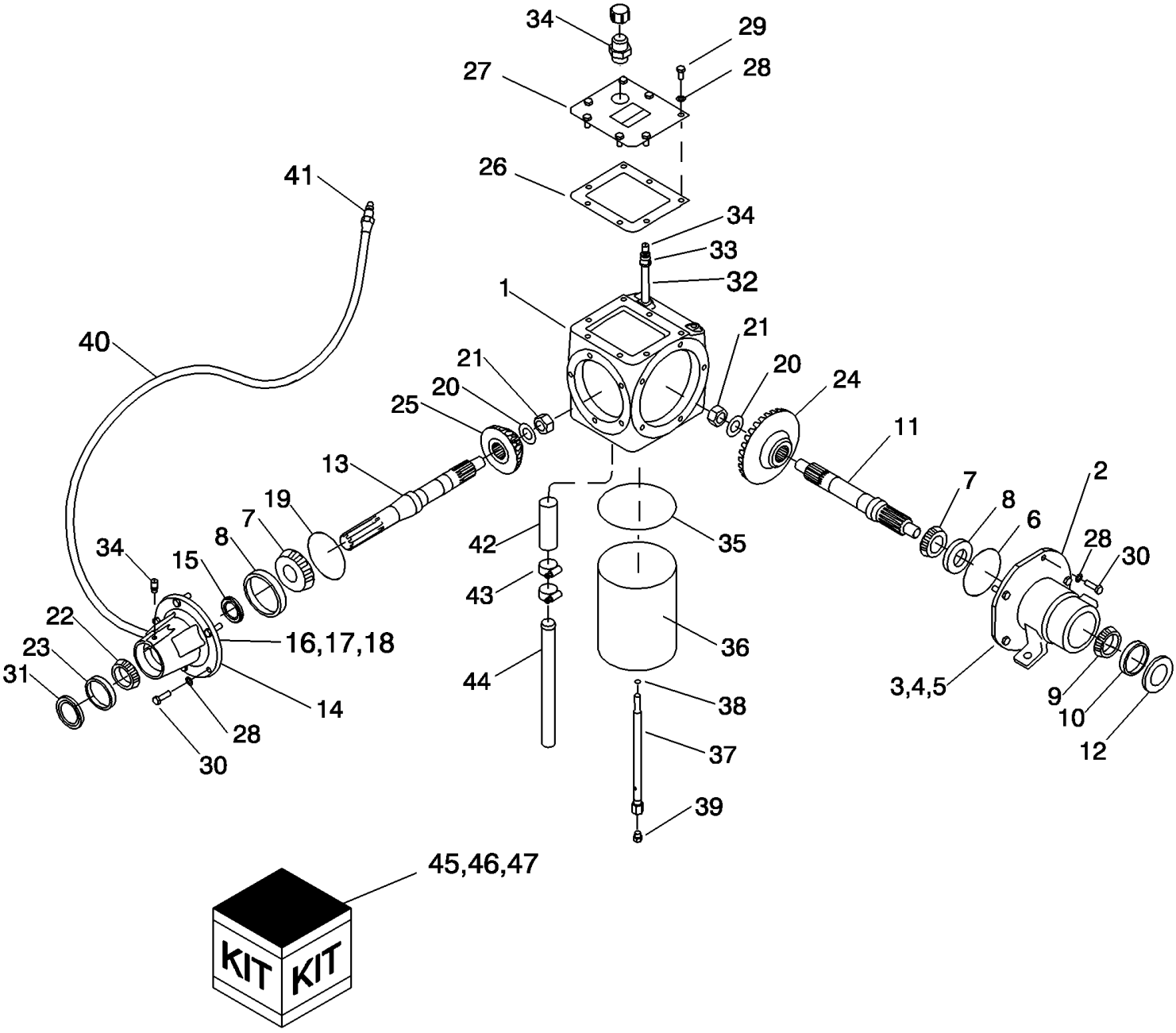

PDF created with pdfFactory trial version www.pdffactory.com

7088 AXIAL-FLOW COMBINE (EU) (4/08-)

09A-12 GEAR CASE ASSEMBLY, FEEDER DRIVE

ссылка	Номер детали	Кол-во	Описание
1	397128A1	1	HOUSING, Feeder Drive Gear
2	390549A1	1	HOUSING, Forward Drive Bell Right Hand
3	191366C1	AR	SHIM, 0.127 mm, Forward Drive Bell Right Hand
4	191367C1	AR	SHIM, 0.1778 mm, Forward Drive Bell Right Hand
5	191368C1	AR	SHIM, 0.508 mm, Forward Drive Bell Right Hand
6	238-5259	1	O-RING, -259, 70 Duro, 6.234" ID x .139" Thk,
7	57861H	2	BEARING, CUP,
8	390952A1	2	BEARING, CONE,
9	197608R1	1	BEARING, CUP,
10	197609R91	1	BEARING, CONE,
11	191384C2	1	SHAFT, Forward Drive Driven, Output
12	192528C1	1	SEAL, Oil Forward Gear Case Output
13	191396C1	1	SHAFT, Forward Gear Case Input
14	390547A1	1	HOUSING, Forward Drive Bell, Rear
15	938294R91	1	SEAL, Oil Forward Gear Case Input
16	194548C1	AR	SHIM, 0.005 mm, Forward Drive Rear Bell Housing
17	194549C1	AR	SHIM, 0.007 mm, Forward Drive Rear Bell Housing
18	194550C1	AR	SHIM, 0.020 mm, Forward Drive Rear Bell Housing
19	238-5250	1	O-RING, -250, 70 Duro, 4.984" ID x .139" Thk,
20	496-21094	2	WASHER, 15/16" x 1 3/4" x .179", HDN,
21	185413C1	2	NUT,
22	618024R1	1	BEARING, CUP,
23	618023R91	1	BEARING, CONE,
24	1315599C1	1	GEAR, Forward Driven, 31T
25	1315598C1	1	GEAR, Forward Driven, 18T
26	191397C2	1	GASKET, Forward Gear Case
27	416615A1	1	COVER, Oil Circulation
28	492-11038	17	WASHER, LOCK, 3/8",
29	413-612	7	BOLT, Hex, 3/8"-16 x 3/4", G5, Full Thd,
30	413-620	10	BOLT, Hex, 3/8"-16 x 1 1/4", G5, Full Thd,
31	192527C1	1	SEAL, Oil Forward Gear Case Input
32	221-1142	1	PIPE, Nipple, 1/4" NPT x 4 1/2",
33	221-1344	1	COUPLING,
34	219-434	2	BREATHER, 1/8"-27 NPT, Short, w/washer,
35	405462R1	1	GASKET, Oil Filter Case
36	242234A1	1	SHELL, Oil Filter Cover
37	398059A1	1	BOLT, SPECIAL, Center Drain
38	238-5013	1	O-RING, -013, 70 Duro, .426" ID x .070" Thk,
39	218-5153	1	PLUG, Hex Hd, 7/16"-20 ORB,
40	1339006C1	1	HOSE, Grease Line
41	219-8	1	NIPPLE, LUBE, 1/4"-28 NPT x .54" lg,

PDF created with pdfFactory trial version www.pdffactory.com

ссылка	Номер детали	Кол-во	Описание
42	426559A1	1	HOSE, Oil Circulation
43	214-3228	2	CLAMP, HOSE, 1.00/1.875 HD Worm, W/liner,
44	426552A1	1	TUBE, Forward Gear Case Circulation
45	195485C1	1	KIT, SHIM, Inc. 3 - 5
46	195484C2	1	KIT, SHIM, Inc. 16 - 18
47	1315597C1	1	GEAR SET, Inc. 24, 25

PDF created with pdfFactory trial version www.pdffactory.com

09A-13 DRIVESHAFT, SEPARATOR JACKSHAFT

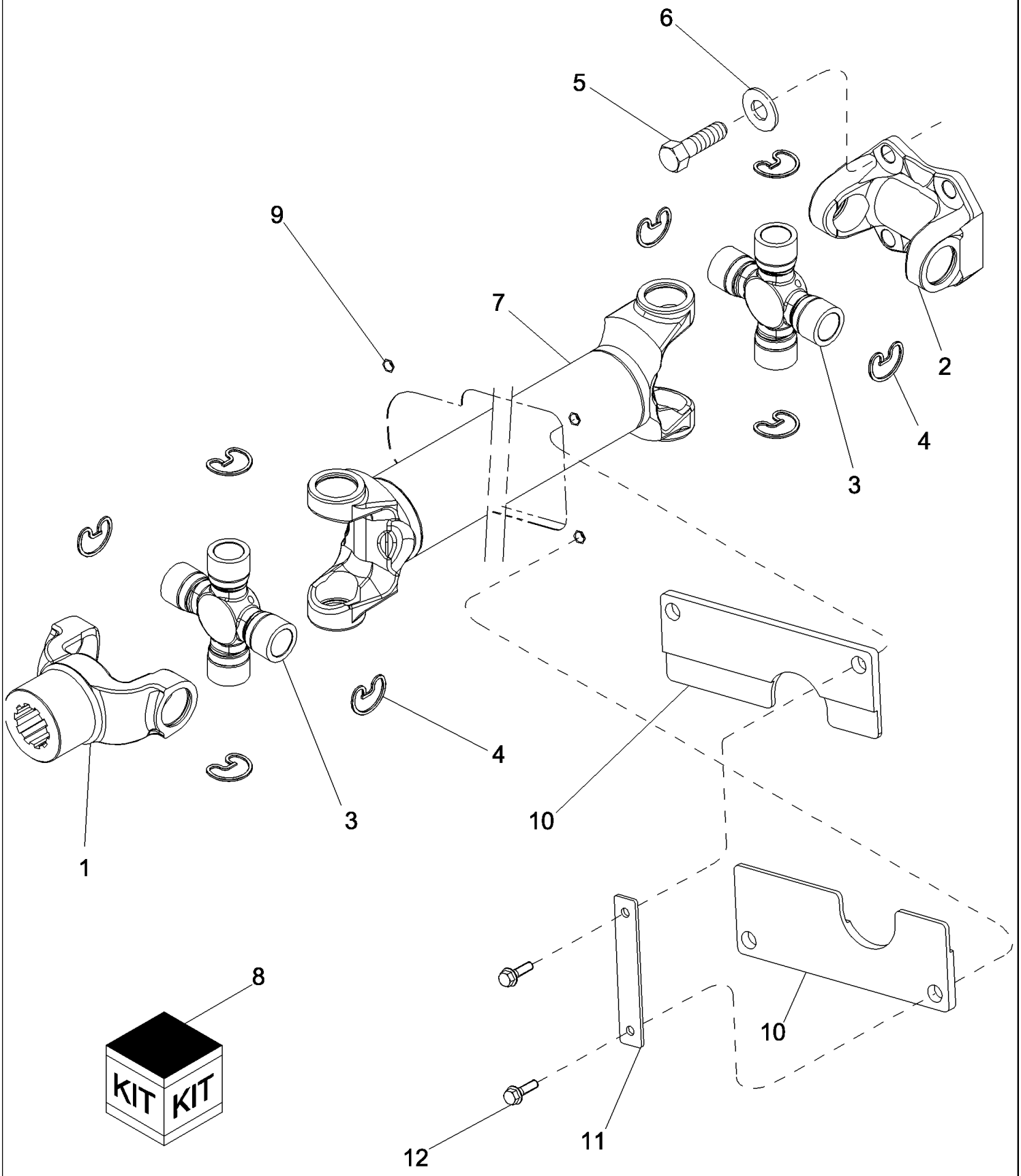

PDF created with pdfFactory trial version www.pdffactory.com

7088 AXIAL-FLOW COMBINE (EU) (4/08-)

09A-13 DRIVESHAFT, SEPARATOR JACKSHAFT

ссылка	Номер детали	Кол-во	Описание
1	87600701	1	YOKE,
2	87600700	1	FLANGE,
3	NSS	2	NOT SERVICED SEPARATELY, BEARING CROSS
4	87600698	8	RING, SNAP,
5	87035075	4	SCREW, 12 Pt Hd, M12 x 35, 12.9,
6	412123	4	WASHER, M12 x 21 x 2.6 Thk,
7	NSS	1	NOT SERVICED SEPARATELY, TUBE ASSEMBLY, Driveshaft
8	87597409	1	CROSSBAR, Cross Bearing, Inc. 3,4
9	87284531	4	NUT,
10	87584502	2	SEAL, COMPOSITE, Feeder Driveshaft
11	87624399	2	STRAP, Driveshaft Seal Retainer
12	87030775	4	BOLT, Hex Flg, M8 x 30, 10.9, Full Thd,

PDF created with pdfFactory trial version www.pdffactory.com

7088 AXIAL-FLOW COMBINE (EU) (4/08-)

09A-14 HOUSING ASSEMBLY SEPARATOR JACKSHAFT WITH PULLEYS AND SUPPORT

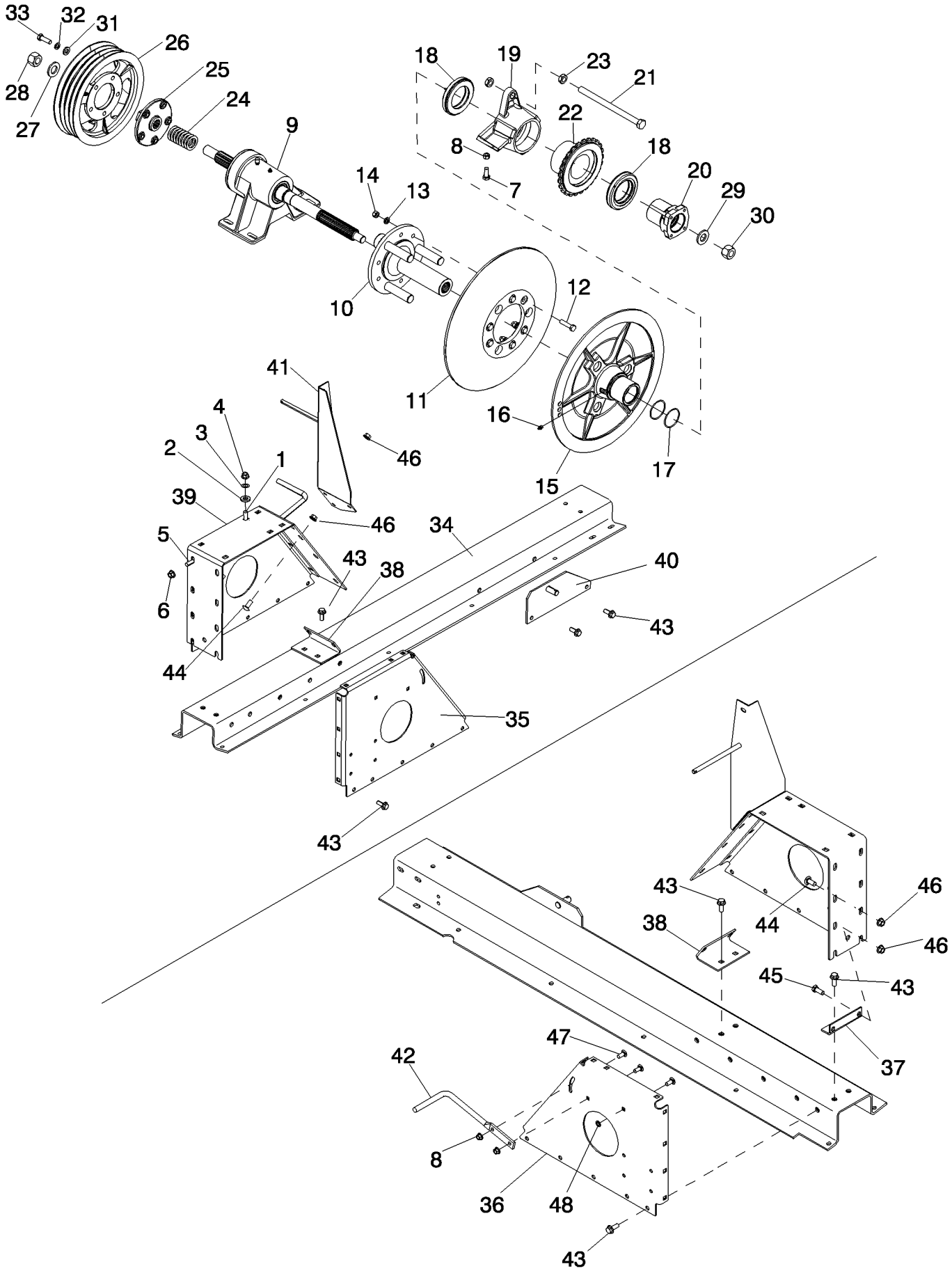

PDF created with pdfFactory trial version www.pdffactory.com

7088 AXIAL-FLOW COMBINE (EU) (4/08-)

09A-14 HOUSING ASSEMBLY SEPARATOR JACKSHAFT WITH PULLEYS AND SUPPORT

ссылка	Номер детали	Кол-во	Описание
1	87495307	6	BOLT,
2	86592701	6	WASHER, M12 x 35 x 5, HT,
3	412123	6	WASHER, M12 x 21 x 2.6 Thk,
4	337475	6	NUT, M12, Cl 10,
5	87695427	4	SCREW,
6	87698855	4	SCREW,
7	87698836	2	BOLT,
8	86050279	4	NUT, M10 x 1.5, Flg, Cl 10,
9	87744680	1	HOUSING, Separator Jackshaft, 5088
9	87609224	1	HOUSING ASSY., Separator Jackshaft, 6088, 7088
10	87307489	1	HUB CAP, Stationary, Rotor Drive, 6088, 7088
10	87481453	1	HUB, Rotor Drive Variator, 5088
11	87602134	1	PULLEY, Rotor Drive Fixed, 6088, 7088
11	87529708	1	PULLEY ASSY., Rotor Drive Fixed, 5088
12	426-832	6	BOLT, Hex, 1/2"-13 x 2", G8,
13	492-21050	6	WASHER, LOCK, 1/2",
14	429-108	6	NUT, 1/2"-13, G8,
15	87307503	1	PULLEY ASSY., Rotor Drive Variable, 6088, 7088
15	413164A1	1	PULLEY, Rotor Drive Variable, 5088
16	219-86	1	NIPPLE, LUBE, 1/8" x .62" lg, Drive,
17	238-5230	2	O-RING, -230, 70 Duro, 2.484" ID x .139" Thk, , 6088, 7088
17	238-5226	2	O-RING, -226, 70 Duro, 1.984" ID x .139" Thk, , 5088
18	87307506	2	BEARING, BALL, , 6088, 7088
18	278927A1	2	BEARING, THRUST, , 5088
19	87307508	1	SLEEVE, Variator Pulley, Female, 6088, 7088
19	194394C1	1	HUB, Variator Pulley, Female, 5088
20	87307510	1	COUPLING, Universal Joint, 6088, 7088
20	87733473	1	COUPLING, Universal Joint, 5088
21	413-12176	1	BOLT, Hex, 3/4"-10 x 11", G5,
22	87307512	1	SLEEVE, Variator Pulley, Male, 6088, 7088
22	87678413	1	SPROCKET, Variator Pulley, Male, 5088
23	425-1412	2	NUT, Jam, 3/4"-10, G5,
24	87313981	8	WASHER,
25	87677098	1	PULLEY ASSY., Hub Separator Driven
26	87677105	1	PULLEY ASSY., Separator Driven
27	87301675	1	WASHER, 1 3/8" x 2 1/2" x 1/4", HDN,
28	231-41120	1	NUT, LOCK, 1 1/4"-7, GB,
29	496-21106	1	WASHER, 1 1/16" x 2" x .209", Hardened
30	232-41316	1	NUT, LOCK, 1"-8, GC,
31	86639326	5	WASHER, M17.5 x 34 x 5, HT,
32	87016618	5	WASHER, LOCK, M16,

PDF created with pdfFactory trial version www.pdffactory.com

09A-14 HOUSING ASSEMBLY SEPARATOR JACKSHAFT WITH PULLEYS AND SUPPORT

ссылка	Номер детали	Кол-во	Описание
33	412398	5	BOLT, Hex, M16 x 50, 10.9,
34	87549534	1	CHANNEL, Separator Jackshaft Support
35	87393437	1	SUPPORT, Separator Jackshaft, Right Hand
36	87393438	1	SUPPORT, Separator Jackshaft, Left Hand
37	87757057	1	SUPPORT, Separator Jackshaft
38	87757061	1	SUPPORT, Separator Jackshaft
39	87393439	1	SUPPORT, Separator Jackshaft Top
40	87757085	1	GUIDE, Auxiliary Shift Handle
41	87677575	1	SUPPORT ASSY., Separator Belt Channel
42	87331545	1	ROD, Separator Belt Guide
43	87030508	16	BOLT, Hex Flg, M12 x 30, 10.9, Full Thd,
44	87695426	10	SCREW,
45	43260	2	BOLT, Hex, M12 x 30, 10.9,
46	86512497	12	NUT, M12 x 1.75, Flg, Cl 10,
47	87682391	3	BOLT, Short NK, M10 x 25, Cl 10.9,
48	87698854	1	SCREW,

PDF created with pdfFactory trial version www.pdffactory.com

09A-15 SEPARATOR DRIVE SHIELD

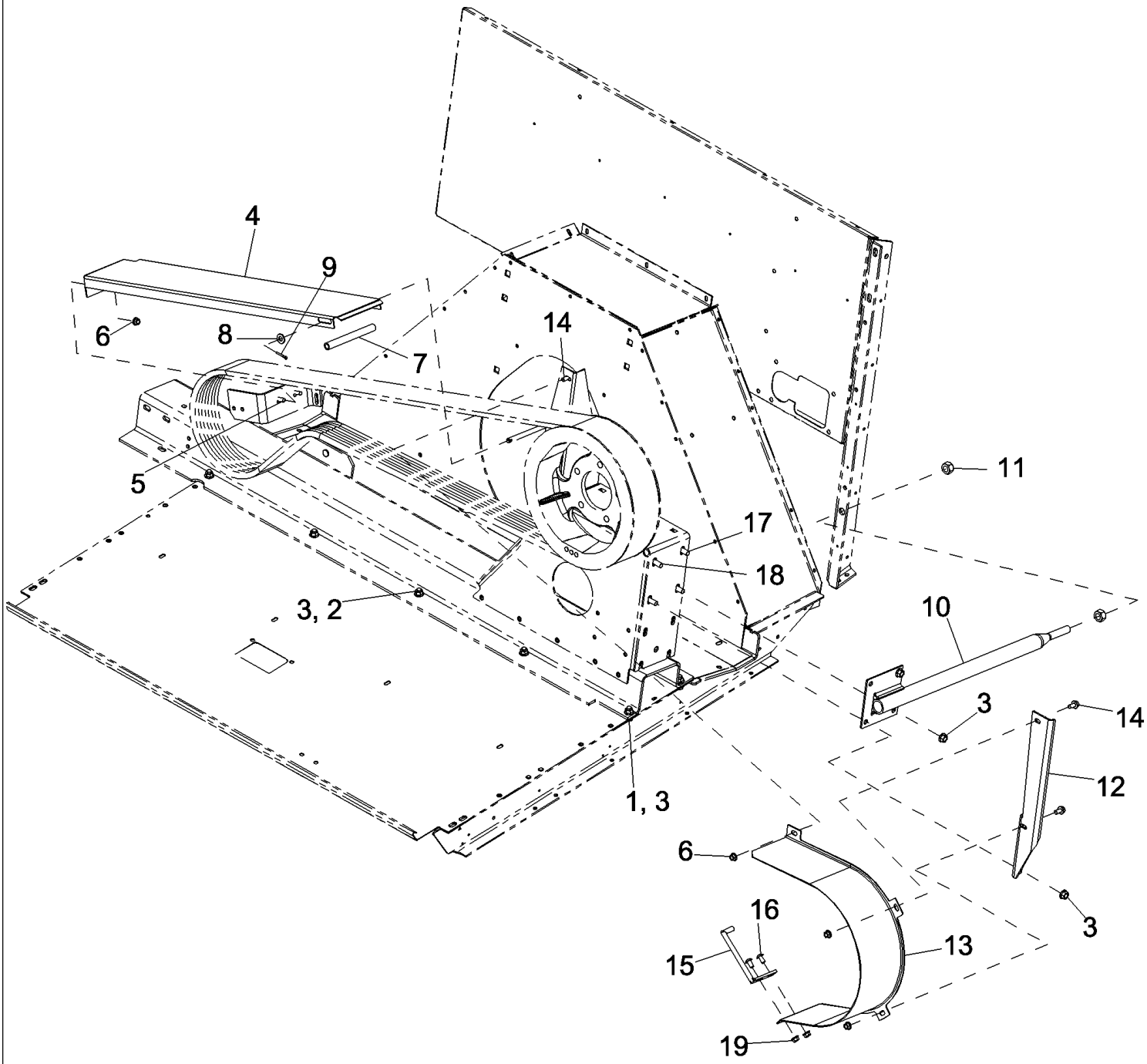

PDF created with pdfFactory trial version www.pdffactory.com

7088 AXIAL-FLOW COMBINE (EU) (4/08-)

09A-15 SEPARATOR DRIVE SHIELD

ссылка	Номер детали	Кол-во	Описание
1	87030508	4	BOLT, Hex Flg, M12 x 30, 10.9, Full Thd,
2	87343550	6	BOLT,
3	86512497	14	NUT, M12 x 1.75, Flg, Cl 10,
4	87724598	1	CHANNEL, Separator Belt Support
5	87698836	2	BOLT,
6	86050279	6	NUT, M10 x 1.5, Flg, Cl 10,
7	87677576	1	HOSE, Separator Belt Channel
8	495-11053	1	WASHER, 1/2", SAE,
9	432-1216	1	PIN, SPLIT (COTTER), 3/16" x 1",
10	87395015	1	TUBE, Separator Jackshaft Support
11	425-1112	2	NUT, 3/4"-16, G5,
12	84129118	1	SUPPORT, Separator Belt Trap
13	87393441	1	SHIELD, Separator Belt, Driven Pulley
14	87698835	3	BOLT,
15	293817A1	1	GUIDE, Separator Belt
16	847-3820	2	SCREW, Sltd Tr Hd, M8 x 20, 10.9, Serr,
17	87695426	2	SCREW,
18	87695427	2	SCREW,
19	86507066	2	NUT, M8 x 1.25, Flg, Cl 10,

PDF created with pdfFactory trial version www.pdffactory.com

09B-01 ROTOR GEARCASE MOUNTING AND ASSEMBLY

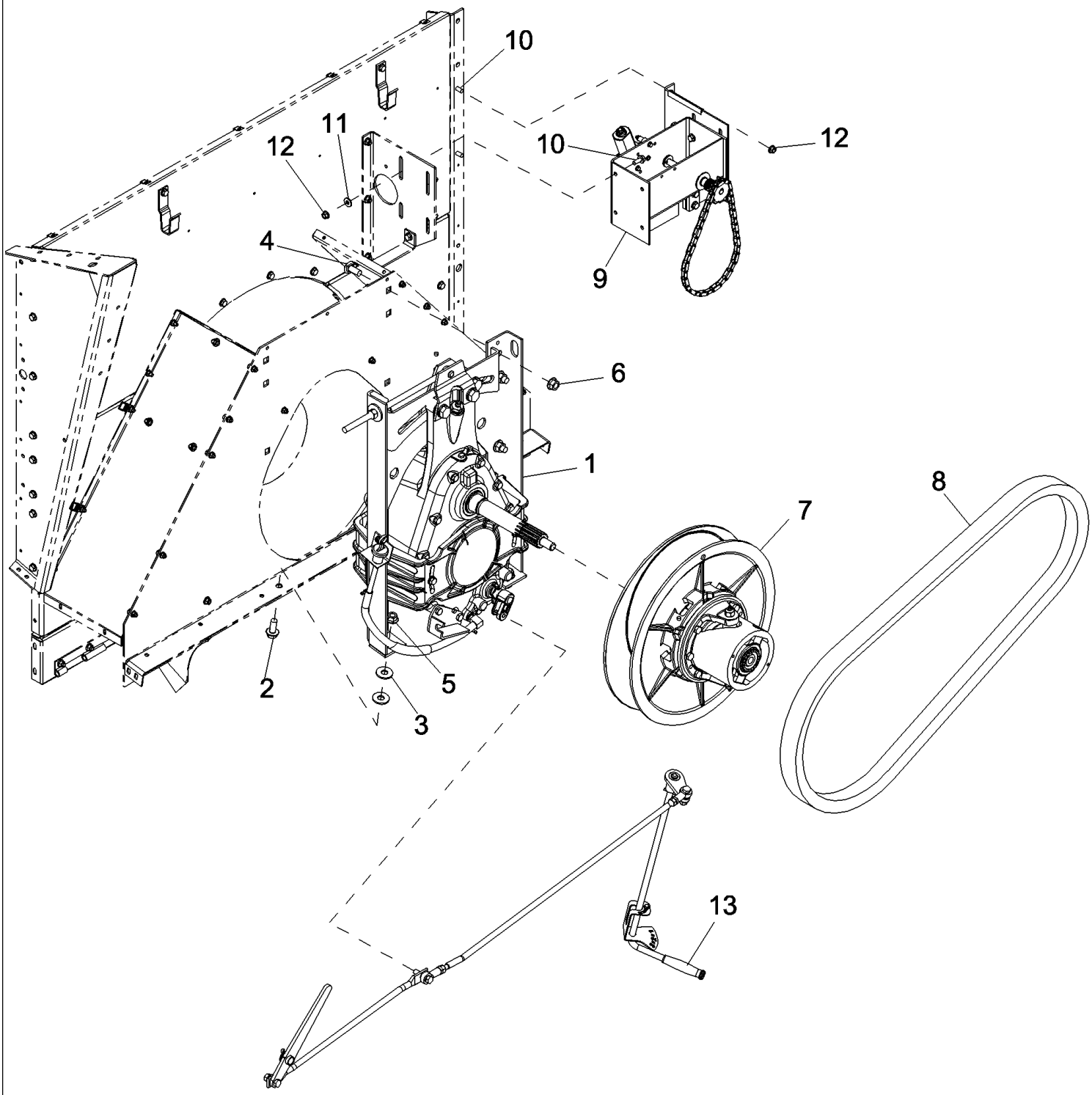

PDF created with pdfFactory trial version www.pdffactory.com

09B-01 ROTOR GEARCASE MOUNTING AND ASSEMBLY

ссылка	Номер детали	Кол-во	Описание
1	NSS	1	NOT SERVICED SEPARATELY, DRIVER ASSEMBLY ROTOR GEARBOX, Mounting, See Figure 09B-02
2	86978772	2	BOLT,
3	87317689	4	WASHER,
4	86595832	6	BOLT, CARRIAGE, Short NK, M16 x 40, Cl8.8, Full Thd,
5	87016581	2	NUT, LOCK, M16 x 2, Flg, Cl 10,
6	86512498	6	NUT, M16 x 2, Flg, Cl 10,
7	NSS	1	NOT SERVICED SEPARATELY, PULLEY ASSEMBLY, Torque Sensing Unit, See Figure 09B-05
8	87301455	1	BELT, Rotor Drive, 5088
8	87615553	1	BELT, Rotor Drive, 6088, 7088
9	NSS	1	NOT SERVICED SEPARATELY, SUPPORT ASSEMBLY, Rotor Speed Adjustment Motor, See Figure 09B-04
10	87698836	6	BOLT,
11	495-81135	4	WASHER, 13/32" x 1" x .120",
12	86050279	6	NUT, M10 x 1.5, Flg, Cl 10,
13	NSS	1	NOT SERVICED SEPARATELY, LINKAGE ASSEMBLY, 3-Speed Rotor Shifter, See Figure 09B-07

PDF created with pdfFactory trial version www.pdffactory.com

09B-02 DRIVER ASSEMBLY ROTOR GEARBOX, MOUNTING

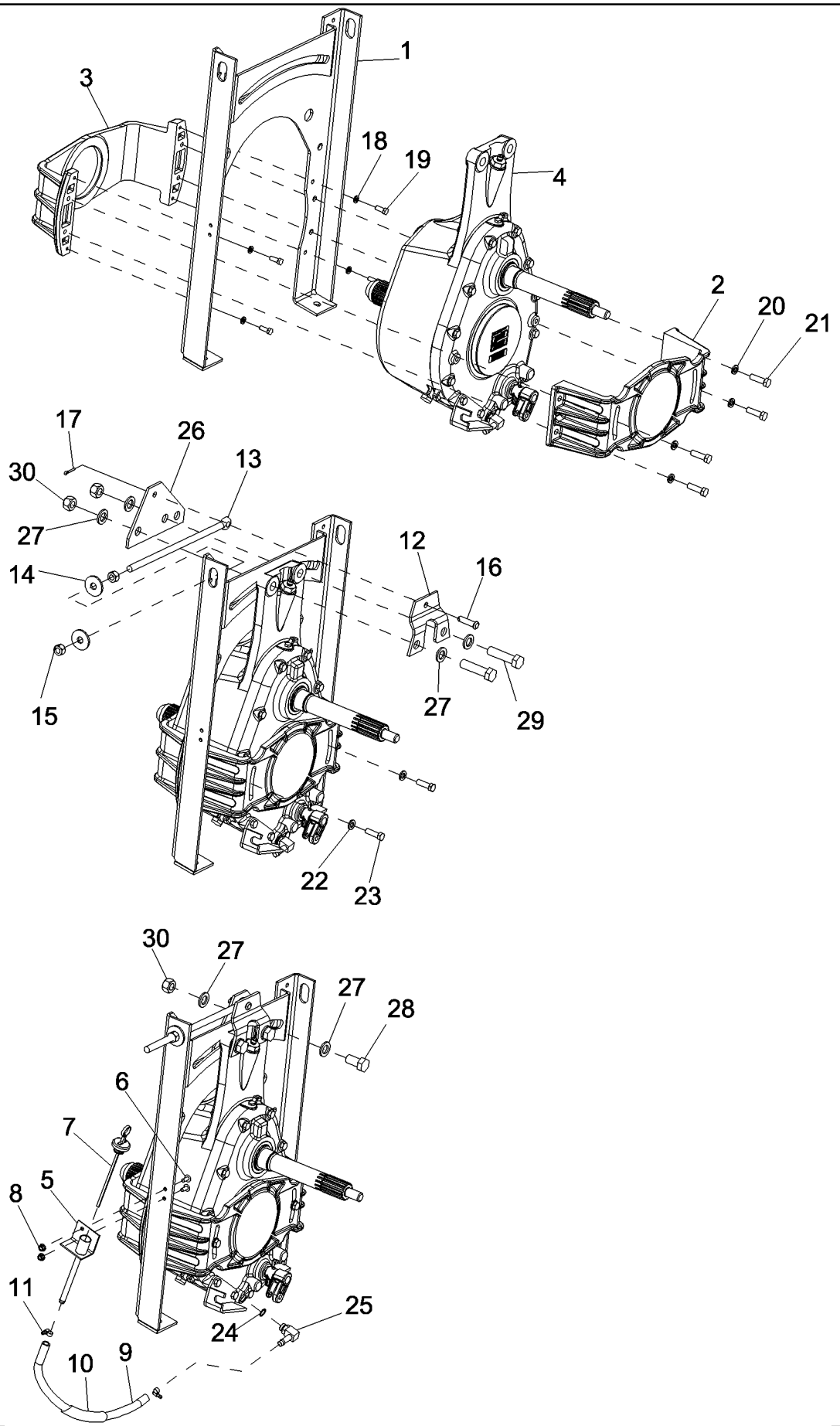

PDF created with pdfFactory trial version www.pdffactory.com

7088 AXIAL-FLOW COMBINE (EU) (4/08-)

09B-02 DRIVER ASSEMBLY ROTOR GEARBOX, MOUNTING

ссылка	Номер детали	Кол-во	Описание
1	87757215	1	SUPPORT ASSY., Rotor Gearbox
2	87406698	1	SUPPORT, Rotor Gearbox, Rear
3	87406699	1	SUPPORT, Rotor Gearbox, Front
4	REF	1	INSTRUCTION, GEAR CASE ASSEMBLY, Three Speed Rotor Drive, See Figure 09B-06
5	193946C1	1	TUBE, Dipstick
6	477-73112	2	BOLT, Slotted Tr Hd, 5/16"-18 x 3/4",
7	194066C91	1	DIPSTICK, Rotor Drive
8	231-5145	2	NUT, Flg, USR, 5/16"-18,
9	194043C1	1	HOSE, Fill and Drain
10	163493C1	1	STRIP,
11	214-1706	2	CLAMP, HOSE, #6, 0.44/0.78 Type M Worm,
12	87406696	1	BRACKET, Rotor Gearbox Support
13	188143C1	1	EYEBOLT, Gear Housing
14	495-81030	2	WASHER, 21/32" x 2" x .179",
15	425-1010	2	NUT, 5/8"-11, G5,
16	439-5832	1	PIN, HEADED, 1/2" x 2",
17	432-1216	1	PIN, SPLIT (COTTER), 3/16" x 1",
18	492-11038	4	WASHER, LOCK, 3/8",
19	413-616	4	BOLT, Hex, 3/8"-16 x 1", G5, Full Thd,
20	492-11050	4	WASHER, LOCK, 1/2",
21	413-828	4	BOLT, Hex, 1/2"-13 x 1 3/4", G5,
22	896-11012	2	WASHER, M13.5 x 24.5 x 3, HT,
23	614-12040	2	BOLT, Hex, M12 x 40, 8.8, Full Thd,
24	237-6008	1	O-RING, 8-1, 90 Duro, .644" ID x .087" Thk,
25	217-348	1	FITTING, 90є, 1/2" Hose x 3/4"-16 ORB Beaded,
26	87406697	1	PLATE, Rotor Gearbox Support
27	87529307	6	WASHER,
28	87342019	1	BOLT,
29	87024335	2	BOLT, Hex, M20 x 80, 10.9, Full Thd,
30	87619751	3	NUT,

PDF created with pdfFactory trial version www.pdffactory.com

09B-03 LINKAGE ASSEMBLY, 3-SPEED ROTOR SHIFTER

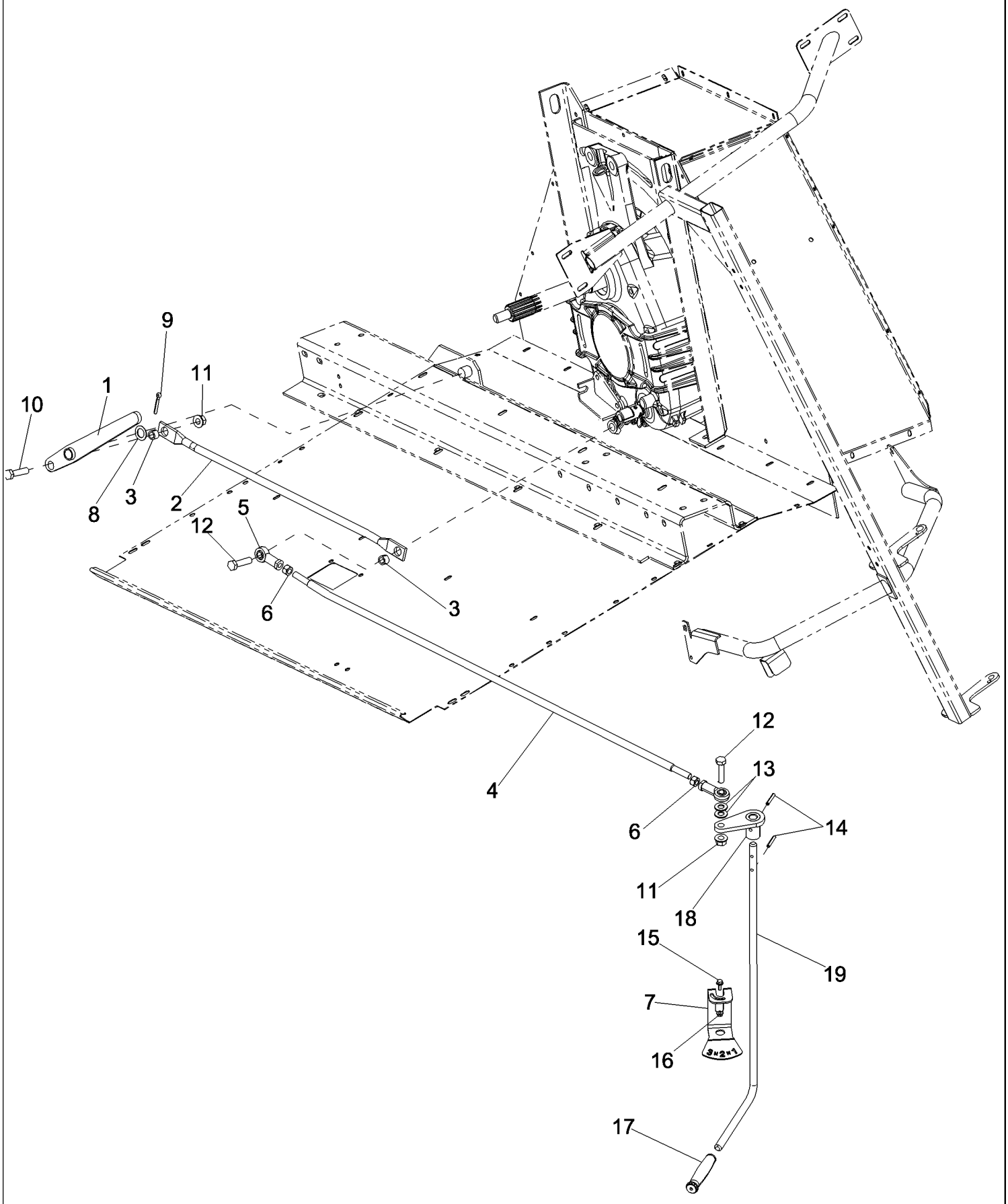

PDF created with pdfFactory trial version www.pdffactory.com

7088 AXIAL-FLOW COMBINE (EU) (4/08-)

09B-03 LINKAGE ASSEMBLY, 3-SPEED ROTOR SHIFTER

ссылка	Номер детали	Кол-во	Описание
1	87528912	1	HANDLE, Auxiliary Shift 3-Speed Rotor
2	84134672	1	ROD ASSY., 3-Speed Rotor Auxiliary Shifter
3	87387107	2	BUSHING, LARGE,
4	84135525	1	ROD ASSY., 3-Speed Rotor Shifter, Inc. 5, 6
5	86582884	2	END, 3-Speed Rotor Shifter Rod
6	425-118	2	NUT, 1/2"-20, G5, 3-Speed Rotor Shifter Rod
7	84135556	1	BRACKET, 3-Speed Rotor Shifter
8	495-81037	1	WASHER, 25/32" x 1 1/4" x .060",
9	432-1620	1	PIN, SPLIT (COTTER), 1/4" x 1 1/4",
10	413-824	1	BOLT, Hex, 1/2"-13 x 1 1/2", G5, Full Thd,
11	86521610	2	NUT, LOCK, Flg, 1/2"-13,
12	413-832	2	BOLT, Hex, 1/2"-13 x 2", G5,
13	495-11053	2	WASHER, 1/2", SAE,
14	838-3636	2	PIN, M6 x 36, Coiled,
15	87695418	1	BOLT,
16	86050300	1	NUT, M6 x 1, Flg, Cl10,
17	283524A1	1	GRIP, Control Lever
18	84134693	1	PLATE ASSY., 3-Speed Rotor Shifter
19	84134547	1	ROD, 3-Speed Rotor Gearbox Shifter

PDF created with pdfFactory trial version www.pdffactory.com

09B-04 SUPPORT ASSEMBLY, ROTOR SPEED ADJUSTMENT MOTOR

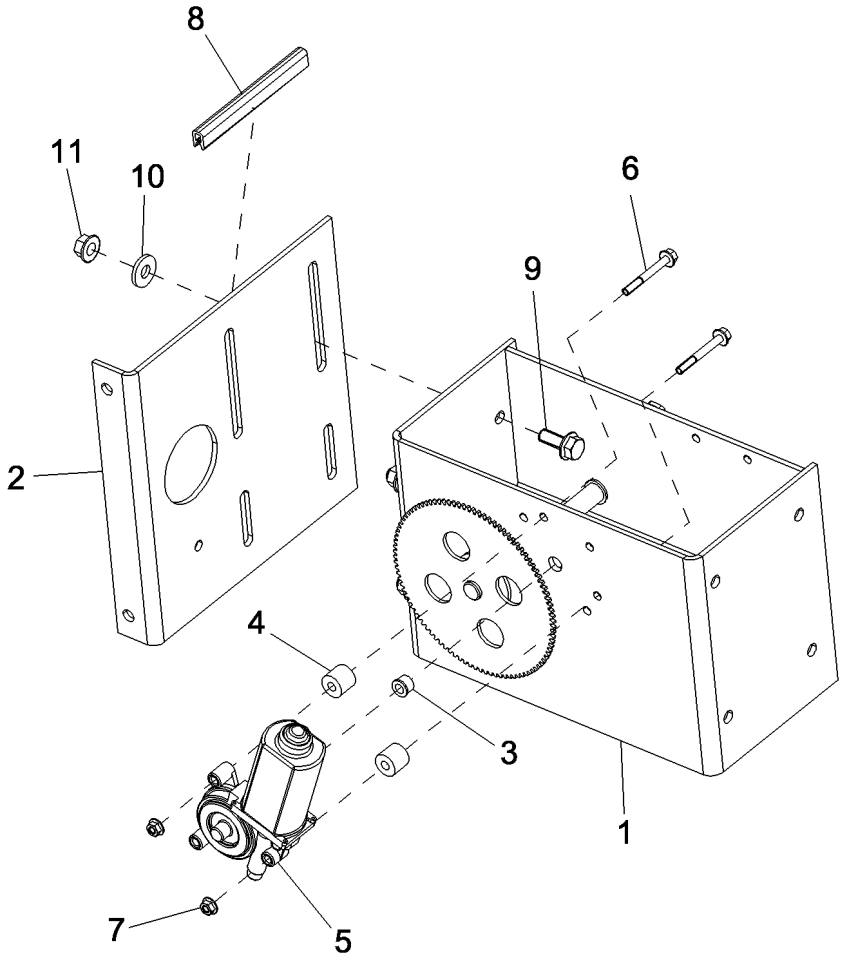

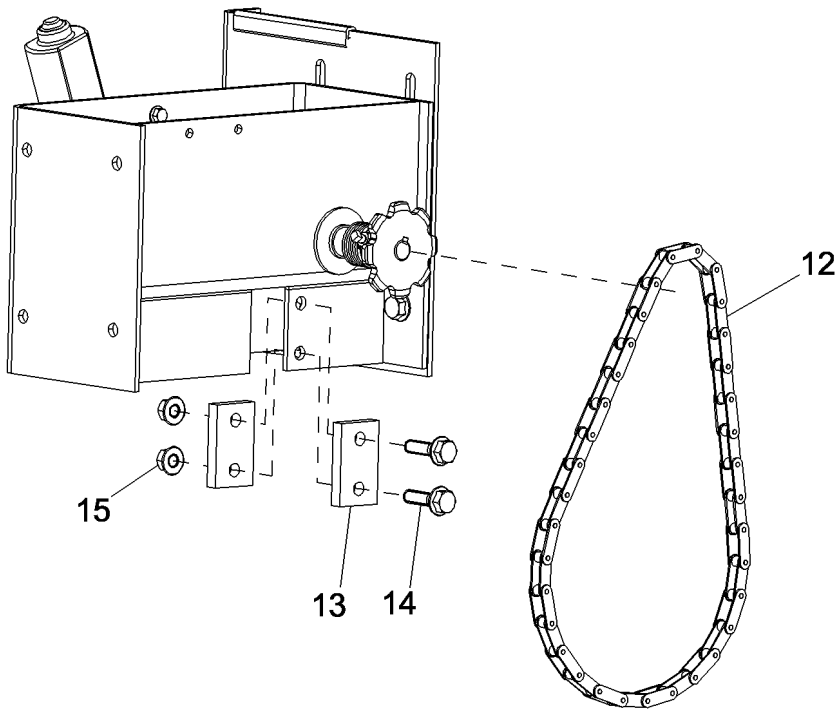

PDF created with pdfFactory trial version www.pdffactory.com

7088 AXIAL-FLOW COMBINE (EU) (4/08-)

09B-04 SUPPORT ASSEMBLY, ROTOR SPEED ADJUSTMENT MOTOR

ссылка	Номер детали	Кол-во	Описание
1	NSS	1	NOT SERVICED SEPARATELY, SUPPORT ASSEMBLY, Rotor Speed Adjustment Shaft
2	194336C2	1	SUPPORT, Rotor Adjustment Motor, Right
3	55825C1	1	BUSHING,
4	113485A1	2	SPACER, Motor
5	87693674	1	MOTOR, ELECTRIC, Fan And Rotor Speed
6	87670760	2	BOLT,
7	87301498	2	NUT,
8	1545944C1	1	SEAL,
9	87698836	4	BOLT,
10	495-81135	4	WASHER, 13/32" x 1" x .120",
11	86050279	4	NUT, M10 x 1.5, Flg, Cl 10,
12	617107R91	1	CHAIN, Rotor Drive Variator
13	1302173C1	2	PAD, Motor Bracket
14	87698838	2	BOLT,
15	87547587	2	NUT,

PDF created with pdfFactory trial version www.pdffactory.com

09B-05 PULLEY ASSEMBLY TORQUE SENSING UNIT

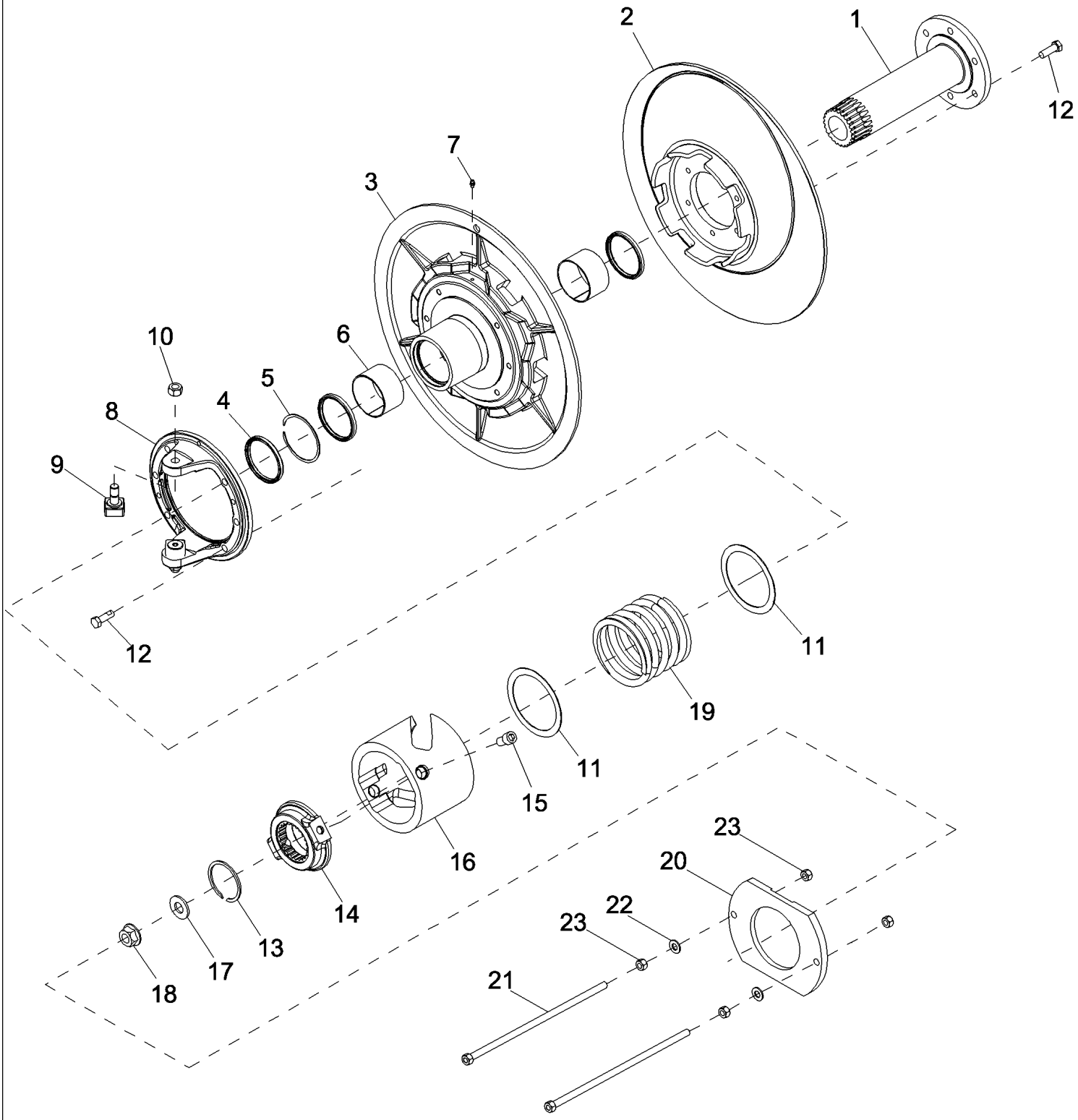

PDF created with pdfFactory trial version www.pdffactory.com

7088 AXIAL-FLOW COMBINE (EU) (4/08-)

09B-05 PULLEY ASSEMBLY TORQUE SENSING UNIT

ссылка	Номер детали	Кол-во	Описание
1	87308245	1	HUB CAP, Half Pulley, 6088, 7088
1	184489C1	1	HUB, Half Pulley, 5088
2	87373385	1	PULLEY, Rotor Driven Fixed, 6088, 7088
2	87369115	1	PULLEY, Rotor Driven Fixed, 5088
3	87308253	1	PULLEY ASSY., Rotor Driven Variable, 6088, 7088
3	450621A1	1	PULLEY, Rotor Driven Variable, 5088
4	87477369	3	SEAL, , 6088, 7088
4	193965C92	3	SEAL, , 5088
5	87309921	1	RING, , 6088, 7088
5	537602R1	1	RING, , 5088
6	87394078	2	PACKAGE,SERVICE, Bushing, Variable Pulley, Inc. 4, 6088, 7088
6	87400246	2	KIT, Bushing, Variable Pulley, Inc. 4, 5088
7	219-87	1	NIPPLE, LUBE, 1/4"-28 x .56" lg, Self-Tap,
8	87308254	1	HUB CAP, Cam Follower, 6088, 7088
8	411411A1	1	HUB, Cam Follower, 5088
9	87554227	2	FOLLOWER, CAM, , 6088, 7088
9	86582880	2	FOLLOWER, CAM, , 5088
10	425-1110	2	NUT, 5/8"-18, G5,
11	87310702	2	WASHER, THRUST, , 6088, 7088
11	188210C91	1	FOLLOWER, CAM, , 5088
12	310-1824	12	BOLT, Locking, 1/2"-13 x 1 1/2", G8,
13	87309922	1	RING, , 6088, 7088
13	360171R1	1	RING, , 5088
14	87308257	1	HUB CAP, Cam Rotor Drive, 6088, 7088
14	411410A1	1	HUB, Cam Rotor Drive, 5088
15	194167C1	2	SCREW,
16	87313007	1	CAM, Torque Sensing (45 Degree), 6088, 7088
16	87436839	1	CAM, Torque Sensing (45 Degree), 5088
17	370255R2	1	WASHER,
18	1315288C1	1	NUT,
19	87308258	1	SPRING, COIL, Rotor Drive Torque Sensing, 6088, 7088
19	413160A1	1	SPRING, Rotor Drive Torque Sensing, 5088
20	86992943	1	PLATE, Torque Sensing Unit Spring Compressor, 5088
20	84128607	1	PLATE, Torque Sensing Unit Spring Compressor, 6088, 7088
21	86992947	2	ROD, Torque Sensing Spring
22	495-11053	2	WASHER, 1/2", SAE,
23	429-108	4	NUT, 1/2"-13, G8,

PDF created with pdfFactory trial version www.pdffactory.com

09B-06 GEAR CASE ASSEMBLY, 3 - SPEED ROTOR DRIVE

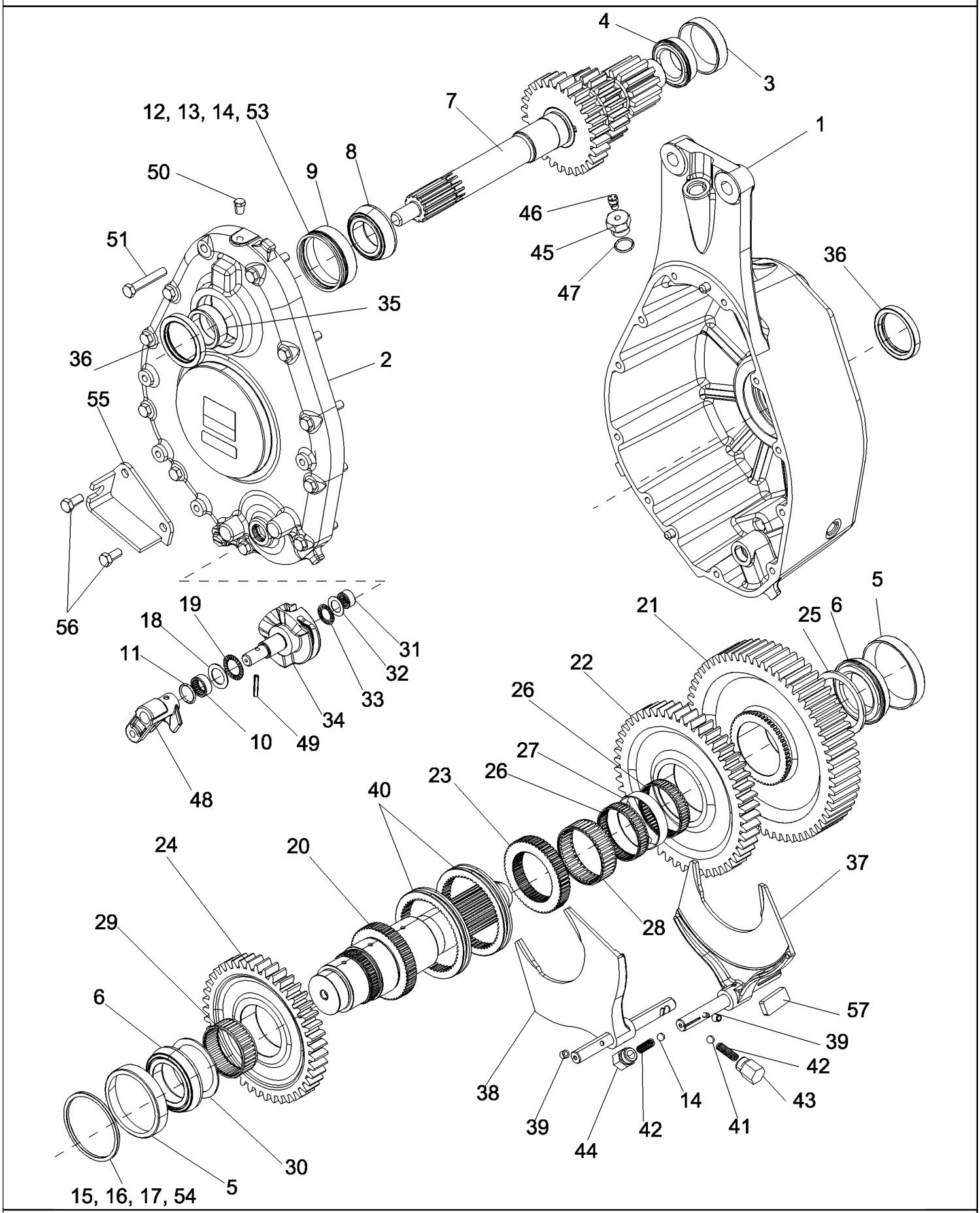

PDF created with pdfFactory trial version www.pdffactory.com

7088 AXIAL-FLOW COMBINE (EU) (4/08-)

09B-06 GEAR CASE ASSEMBLY, 3 - SPEED ROTOR DRIVE

ссылка	Номер детали	Кол-во	Описание
	87331237	1	GEARBOX, Rotor Drive
	87330126C	1	CORE, Gearbox, Rotor Drive
	84171991C	1	CORE-HOUSING, Gearbox, Rotor Drive
	84171911R	1	REMAN, Rotor Drive
1	87330128	1	HOUSING, Rotor Drive Gear Case
2	87330131	1	COVER, Rotor Drive Gear Case
3	130503H	1	BEARING, CUP,
4	300426R91	1	BEARING, CONE,
5	29214H	2	BEARING, CUP,
6	80572270	2	BEARING, CONE,
7	451231A2	1	SHAFT, Rotor Drive Input
8	87326176	1	BEARING, ROLLER, TAPERED,
9	114979H	1	BEARING, CUP,
10	96423C1	1	BEARING, NEEDLE,
11	238-5214	1	O-RING, -214, 70 Duro, .984" ID x .139" Thk,
12	253178A1	AR	SHIM, Input Shaft, 0.381 mm
13	253177A1	AR	SHIM, Input Shaft, 0.254 mm
14	337374A1	AR	SHIM, Input Shaft, 0.203 mm
15	258819A1	AR	SHIM, Output Shaft, 0.381 mm
16	258818A1	AR	SHIM, Output Shaft, 0.254 mm
17	337375A1	AR	SHIM, Output Shaft, 0.203 mm
18	T40066	1	WASHER,
19	G13609	1	BEARING, THRUST,
20	87367599	1	SHAFT, Rotor Drive Output
21	87330133	1	GEAR, Low Driven, 61T
22	87326186	1	GEAR, Mid Driven, 51T
23	451244A1	1	RING, SPLINED,
24	87326187	1	GEAR, High Driven, 43T
25	451245A2	1	WASHER, THRUST,
26	235584A1	2	BEARING, NEEDLE,
27	451255A1	1	SPACER, Low Driven Gear Bearing
28	235591A1	1	BEARING, NEEDLE,
29	235594A1	1	BEARING, NEEDLE,
30	235595A2	1	WASHER, THRUST,
31	A27999	1	BEARING, NEEDLE,
32	396795R1	1	WASHER, THRUST,
33	324105R91	1	BEARING, THRUST,
34	307483A3	1	CAM, Gear Shift, Rotor Gearbox
35	194047C2	1	BUSHING, Input Shaft
36	194051C1	2	SEAL, Rotor Gear Case
37	451249A1	1	SHIFT RAIL, Low/Mid

PDF created with pdfFactory trial version www.pdffactory.com

ссылка	Номер детали	Кол-во	Описание
38	451253A1	1	SHIFT RAIL, High
39	236851A1	2	ROLLER, Cam Rotor Drive
40	87491816	2	COLLAR, Shift
41	211-1014	2	BALL, 7/16" Dia,
42	295537A1	2	SPRING, Detent Ball
43	307410A1	1	PLUG,
44	451237A1	1	PLUG,
45	87326175	1	PLUG, Vent
46	219-434	1	BREATHER, 1/8"-27 NPT, Short, w/washer, Vent
47	237-6012	1	O-RING, 12-1, 90 Duro, .924 ID x .118" Thk,
48	87402650	1	ARM, Cam Shift Rotor Gearbox
49	38-21622	1	PIN, 1/4" x 1 3/8", Coiled,
50	129998	1	PLUG, Hex Hd, 1/2"-20 ORB,
51	828-12070	11	BOLT, Hex, M12 x 70, 10.9,
52	353-779	1	PLUG, Sltd Hd, 3/4"-16, w/O-Ring,
53	87525964	AR	SHIM, 0.076 mm
54	87525965	AR	SHIM, 0.076 mm
55	451241A2	1	BRACKET, Shift Cable
56	628-12025	2	BOLT, Hex, M12 x 25, 10.9, Full Thd,
57	9840491	1	MAGNET,

PDF created with pdfFactory trial version www.pdffactory.com

09B-07 LINKAGE ASSEMBLY, 3-SPEED ROTOR SHIFTER

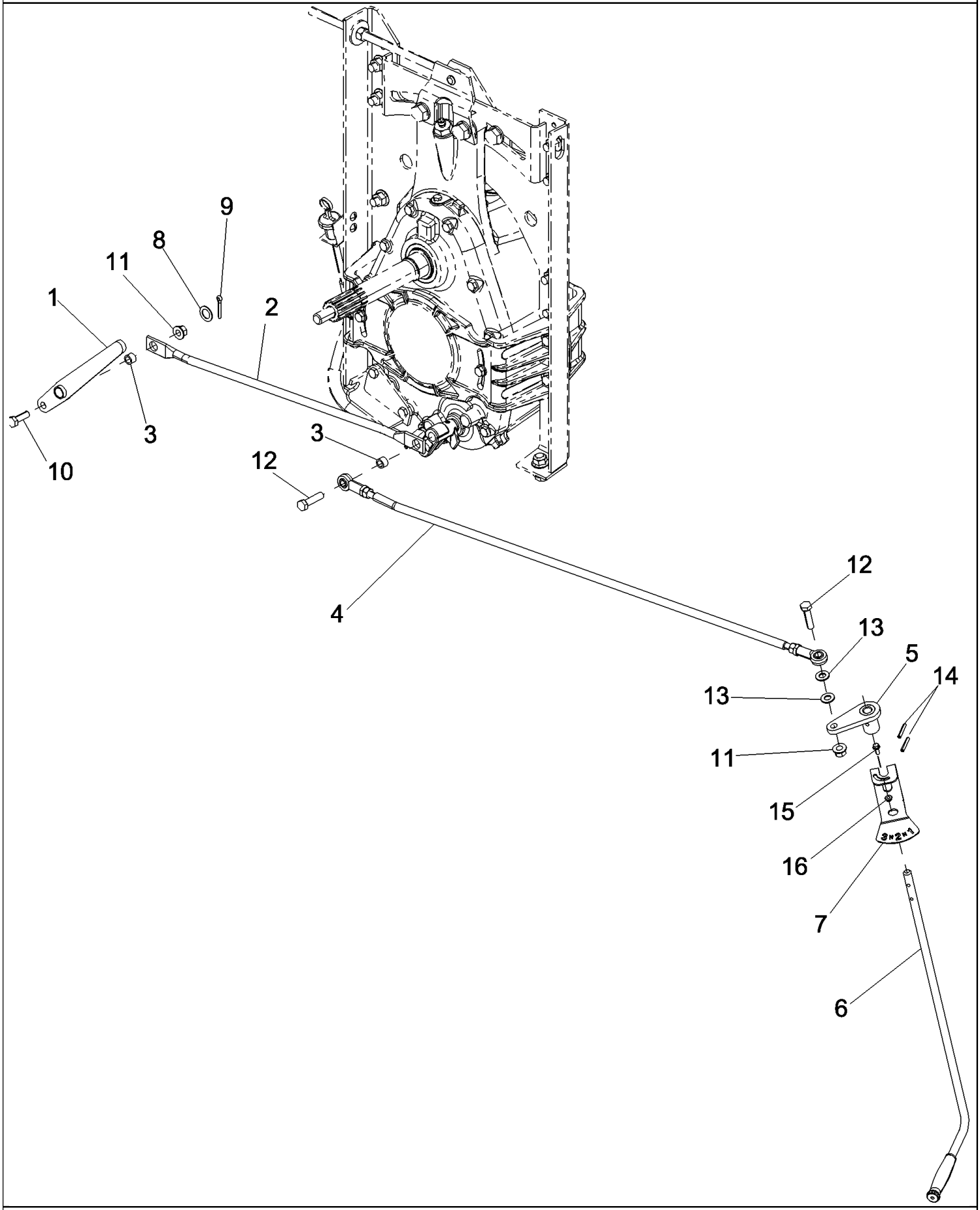

PDF created with pdfFactory trial version www.pdffactory.com

7088 AXIAL-FLOW COMBINE (EU) (4/08-)

09B-07 LINKAGE ASSEMBLY, 3-SPEED ROTOR SHIFTER

ссылка	Номер детали	Кол-во	Описание
1	87528912	1	HANDLE, Auxiliary Shift 3-Speed Rotor
2	84134672	1	ROD ASSY., 3-Speed Rotor Auxiliary Shifter
3	87387107	2	BUSHING, LARGE,
4	84135525	1	ROD ASSY., 3-Speed Rotor Shifter
5	84134693	1	PLATE ASSY., 3-Speed Rotor Shifter
6	84134547	1	ROD, 3-Speed Rotor Gearbox Shifter
7	84135556	1	BRACKET, 3-Speed Rotor Shifter
8	495-81037	1	WASHER, 25/32" x 1 1/4" x .060",
9	432-1620	1	PIN, SPLIT (COTTER), 1/4" x 1 1/4",
10	413-824	1	BOLT, Hex, 1/2"-13 x 1 1/2", G5, Full Thd,
11	86521610	2	NUT, LOCK, Flg, 1/2"-13,
12	413-832	2	BOLT, Hex, 1/2"-13 x 2", G5,
13	495-11053	2	WASHER, 1/2", SAE,
14	838-3636	2	PIN, M6 x 36, Coiled,
15	87695418	1	BOLT,
16	86050300	1	NUT, M6 x 1, Flg, Cl10,

PDF created with pdfFactory trial version www.pdffactory.com

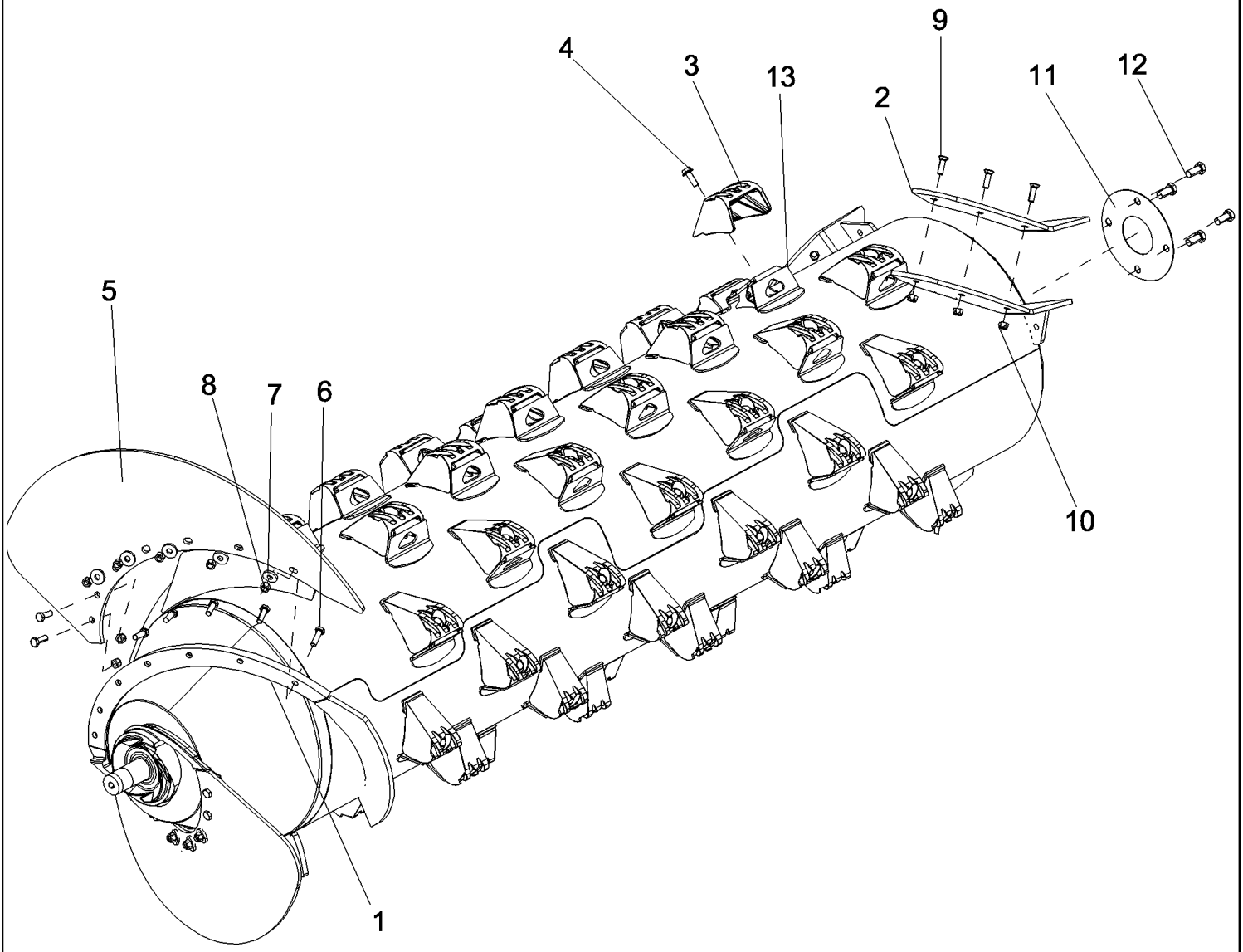

PDF created with pdfFactory trial version www.pdffactory.com

7088 AXIAL-FLOW COMBINE (EU) (4/08-)

09B-08 ROTOR ASSEMBLY GEN II

ссылка	Номер детали	Кол-во	Описание
	87620275	1	ROTOR ASSY., GEN II Corn And Grain
	87620273	1	ROTOR ASSY., GEN II Rice
1	NSS	1	NOT SERVICED SEPARATELY, ROTOR, With Supports
2	87544176	3	FLIGHT, STEEL, Rear Kicker
3	87333869	57	RASP BAR, 23 in. Rotor Tube, Corn And Grain
3	87368806	57	RASP BAR, Spiked, Hardened, Rice, 7088
4	86981487	57	BOLT, Hex Flg, M12 x 35, 10.9, Full Thd,
5	87532511	2	IMPELLER, Rotor Inlet
6	337563	14	BOLT, Hex, M12 x 40, 10.9, Full Thd,
7	86592701	14	WASHER, M12 x 35 x 5, HT,
8	87533547	14	NUT,
9	87314103	9	BOLT, PLOW,
10	412672	9	NUT, LOCK, M12 x 1.75, Cl 10,
11	NSS	1	NOT SERVICED SEPARATELY, PLATE, Rotor Cover
12	86508583	4	BOLT, Hex, M16 x 35, 8.8,
13	87601297	57	SUPPORT ASSY., Rasp Bar

PDF created with pdfFactory trial version www.pdffactory.com

09B-09 ROTOR ASSEMBLY WITH SPECIALTY BARS

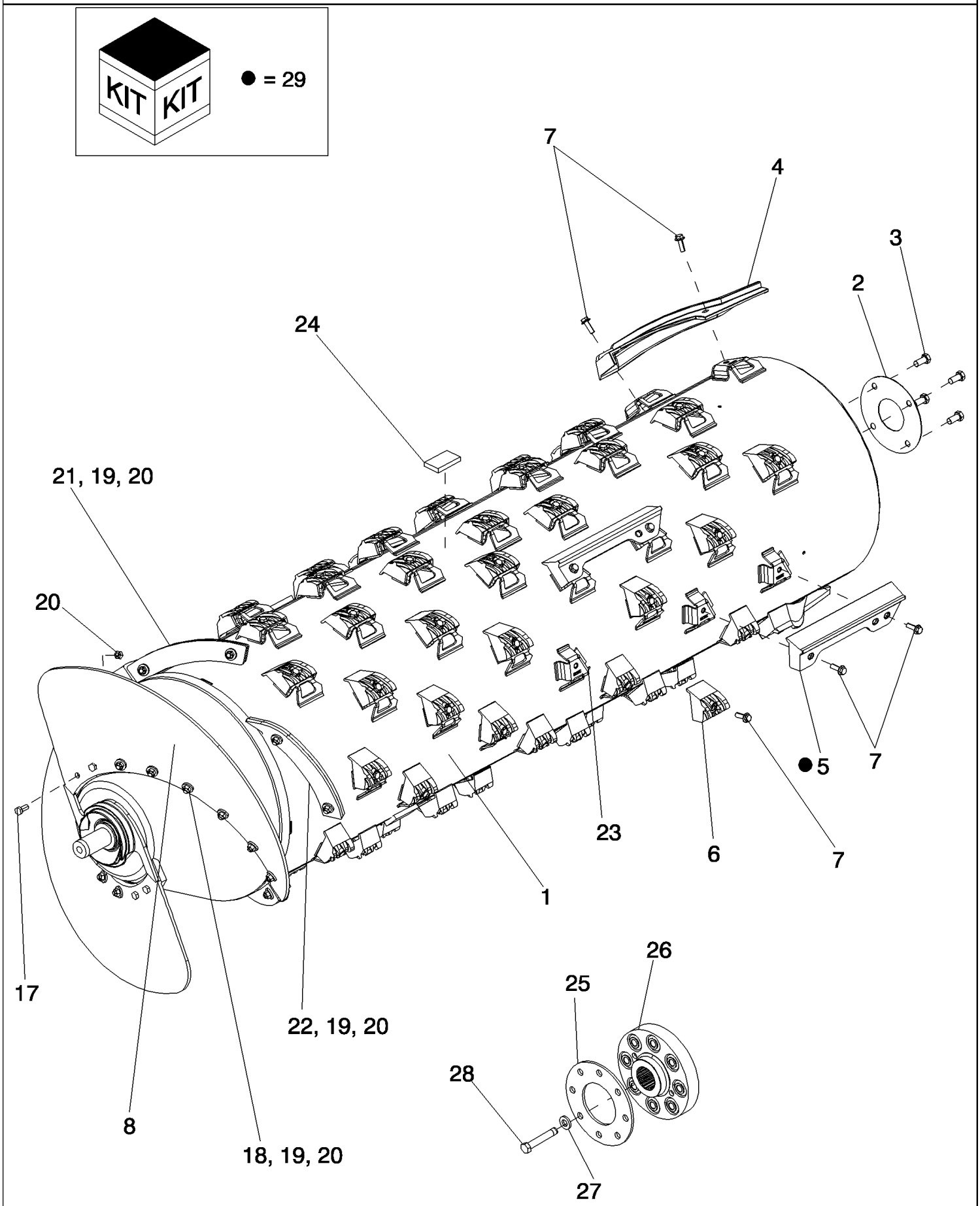

PDF created with pdfFactory trial version www.pdffactory.com

7088 AXIAL-FLOW COMBINE (EU) (4/08-)

09B-09 ROTOR ASSEMBLY WITH SPECIALTY BARS

ссылка	Номер детали	Кол-во	Описание
	87636590	1	ROTOR ASSY., AFX Grain Service, Inc. 1 - 28
1	NSS	1	NOT SERVICED SEPARATELY, ROTOR, AFX With Metric Supports
2	NSS	1	NOT SERVICED SEPARATELY, PLATE, Rotor Cover
3	86508583	4	BOLT, Hex, M16 x 35, 8.8,
4	1327676C1	2	BAR, Helical Kicker, Standard Wear
4	86992048	2	BAR, RFC CADI, Extended Wear
5	1318976C2	4	BAR, Straight Separator, Standard Wear
5	86992047	4	BAR, Straight Separator CADI, Extended Wear
6	1309336C2	66	RASP BAR, Without Rear Spike, Standard Wear
6	278821A2	66	RASP BAR, Without Rear Spike, Extended Wear
7	86981487	78	BOLT, Hex Flg, M12 x 35, 10.9, Full Thd,
8	434525A3	1	KIT, Flight, AFX Rotor Inlet, Inc. 9 - 16
9	NSS	2	NOT SERVICED SEPARATELY, FLIGHT, Standard Wear Rotor Inlet
10	326-820	16	BOLT, Hex, 1/2"-13 x 1 1/4", G8, Full Thd,
11	396-41053	12	WASHER, 17/32" x 1 1/4" x .188", HDN,
12	326-824	12	BOLT, Hex, 1/2"-13 x 1 1/2", G8, Full Thd,
13	199528A1	16	NUT,
14	86989978	1	ROD, Installation Guide
15	425-108	1	NUT, 1/2"-13, G5,
16	446451A2	2	PLATE, Inlet Flight Extension
17	326-820	4	BOLT, Hex, 1/2"-13 x 1 1/4", G8, Full Thd,
18	326-824	12	BOLT, Hex, 1/2"-13 x 1 1/2", G8, Full Thd,
19	396-41053	20	WASHER, 17/32" x 1 1/4" x .188", HDN,
20	199528A1	24	NUT,
21	87386465	2	FLIGHT, STEEL, Inlet Extension
22	87386468	2	FLIGHT, STEEL, Intermediate
23	87281664	78	SUPPORT, Rasp Bar With Metric Nut
24	203960H1	4	WEIGHT, COUNTER, Rotor Balance
25	87619363	1	PLATE, Rotor Load Ring
26	87619364	1	COUPLING, Rotor Drive
27	86639326	16	WASHER, M17.5 x 34 x 5, HT,
28	87550181	8	BOLT,
29	2358001R93	1	DIA, Separator Bars, Set Of 4, Inc. 5

PDF created with pdfFactory trial version www.pdffactory.com

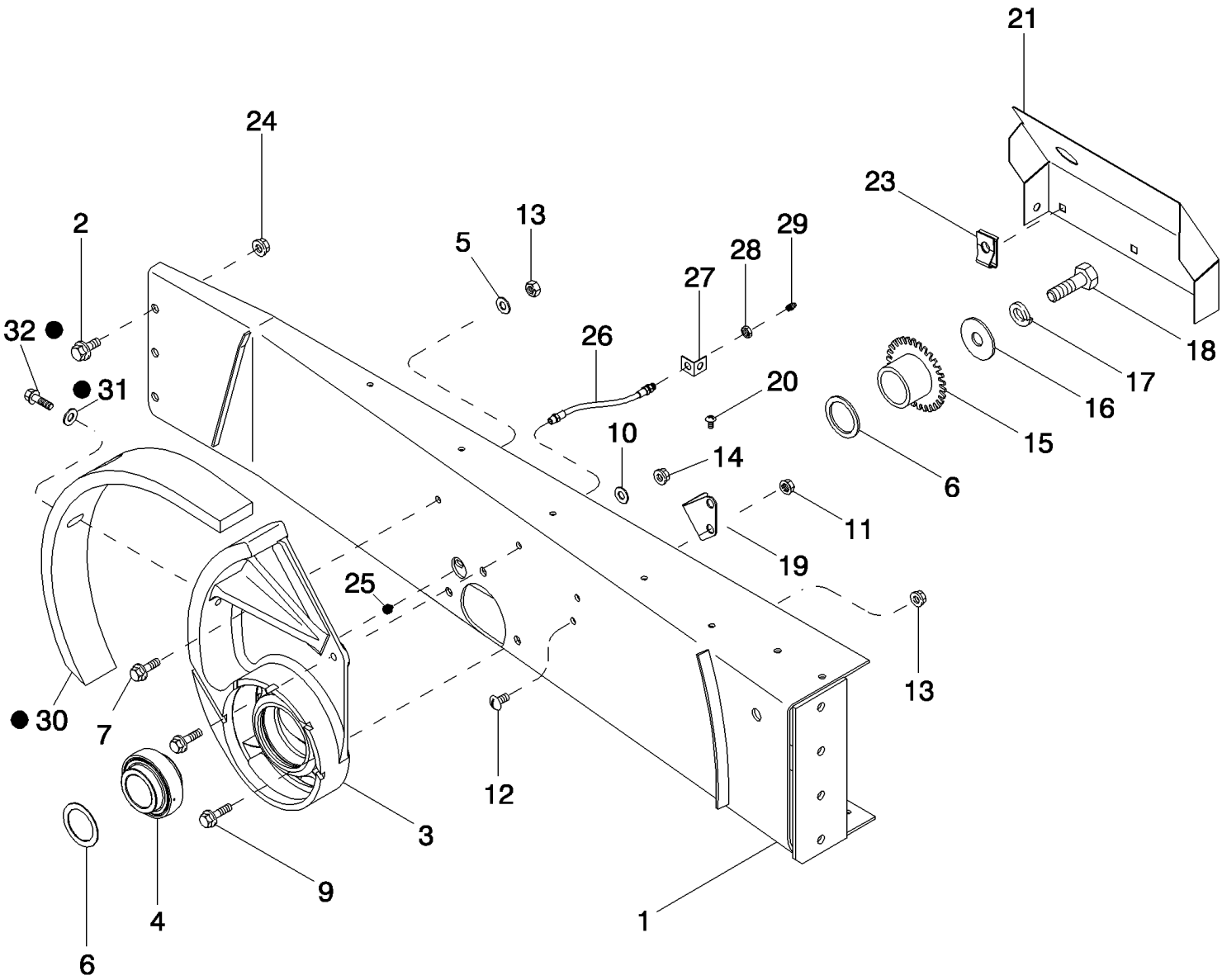

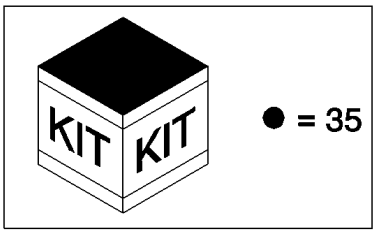

● = 35

PDF created with pdfFactory trial version www.pdffactory.com

7088 AXIAL-FLOW COMBINE (EU) (4/08-)

09B-10 ROTOR INSTALLATION PARTS

ссылка	Номер детали	Кол-во	Описание
1	87613390	1	SUPPORT ASSY., Front Bearing, Extended Wear
2	409-7820	4	BOLT, Hex Flg, 1/2"-13 x 1 1/4", Serr,
3	87680175	1	ROTOR ASSY., With Front Bearing, Inc. 4
4	193282C91	1	BEARING, BALL, Rotor Front
5	86625256	2	WASHER, M12 x 28.5 x 4, HT,
6	495-81097	5	WASHER, 2 1/32" x 2 3/4" x .075",
7	86705431	2	BOLT,
8	86590413	4	CLAMP, (Not Shown)
9	374835	3	BOLT, Hex, M16 x 40, 10.9,
10	86639326	3	WASHER, M17.5 x 34 x 5, HT,
11	9804277	2	NUT, M8 x 1.25, Flg, Cl 8,
12	9671714	2	BOLT, Hex Flg, M8 x 25, 8.8,
13	86512497	2	NUT, M12 x 1.75, Flg, Cl 10,
14	86512498	3	NUT, M16 x 2, Flg, Cl 10,
15	1979965C1	1	ROTOR, Magnetic Speed Pickup
16	70330C1	1	WASHER, Rotor, Front Shaft
17	492-11075	1	WASHER, LOCK, 3/4",
18	424-1228	1	BOLT, Hex, 3/4"-10 x 1 3/4", G2,
19	87648025	1	SUPPORT, Rotor Speed Sensor
20	1310675C1	2	SCREW, LOCK, Sltd Truss Hd, #10-24 x 3/4", w/nylon LW,
21	87681895	1	BRACKET, SUPPORTING, RPM Sensor
23	833-40310	3	NUT, M10, U,
24	231-5145	8	NUT, Flg, USR, 5/16"-18, 1/2
25	219-418	1	ADAPTER, 1/4"-1/8 NPTF, Hose
26	937781R92	1	HOSE, 686 mm (27")
27	87742027	1	BRACKET,
28	F53473	1	NUT, 1/8
29	219-8	1	NIPPLE, LUBE, 1/4"-28 NPT x .54" lg,
30	87416663	1	PLATE, Anti-Wind Extension
31	495-81097	2	WASHER, 2 1/32" x 2 3/4" x .075",
32	337563	2	BOLT, Hex, M12 x 40, 10.9, Full Thd,
33	445395	4	RIVET, Pop, M4.8 x 18.1, (Not Shown)
34	86566989	4	STRAP, CABLE, M4.75 x 190.5 L, (Not Shown)
35	87377347	1	PACKAGE, DIA, Anti-Wind Extension, Inc. 30-32, 5088

PDF created with pdfFactory trial version www.pdffactory.com

09B-11 CONE

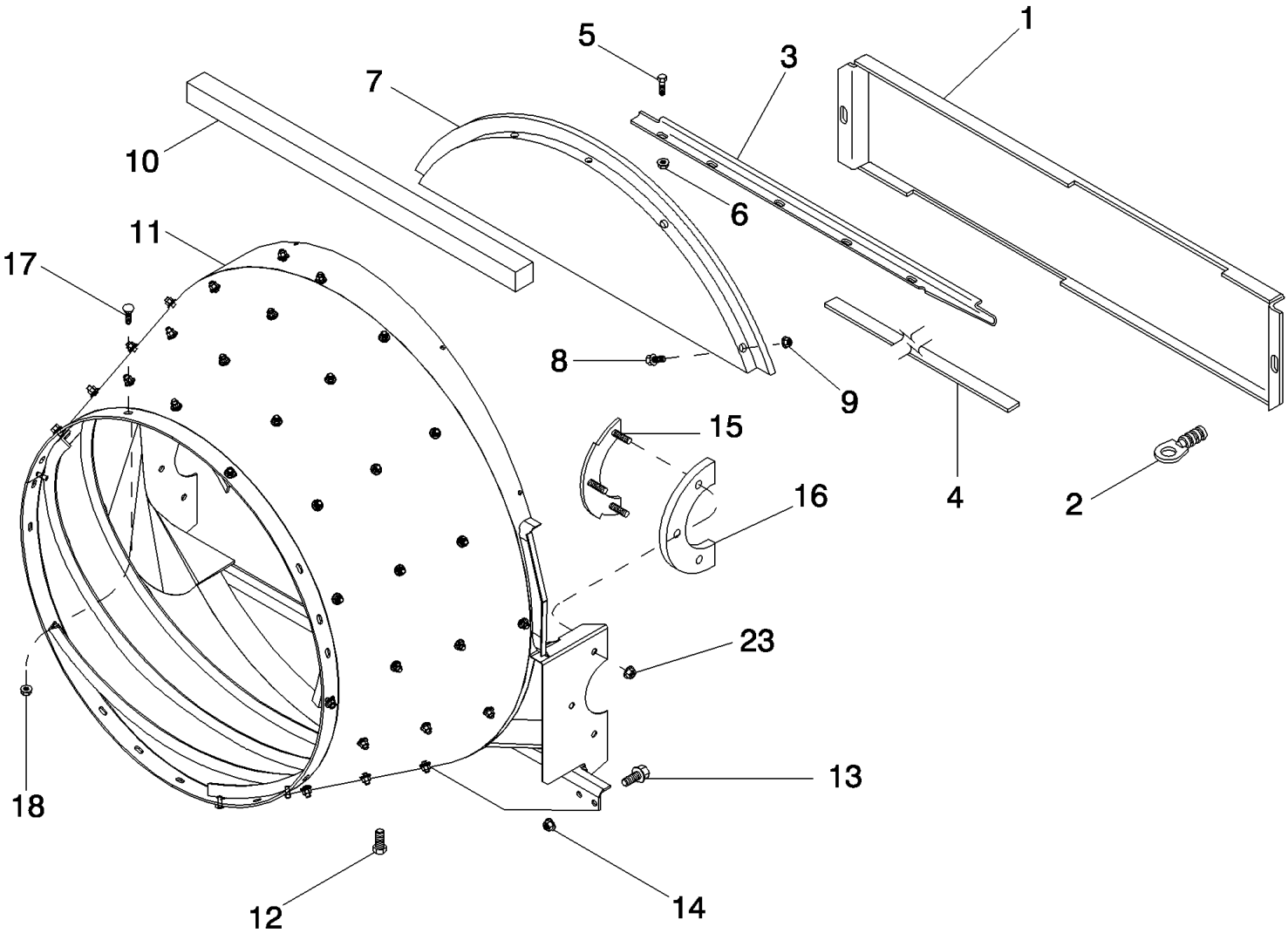

PDF created with pdfFactory trial version www.pdffactory.com

7088 AXIAL-FLOW COMBINE (EU) (4/08-)

09B-11 CONE

ссылка	Номер детали	Кол-во	Описание
1	87721351	1	SHEET, Rotor Front Door
2	188029C1	2	LATCH,
3	231848A1	1	RETAINER, Front Door Lower Seal Retainer
4	231849A2	1	GASKET, Front Door Lower Seal
5	409-7516	5	BOLT, Hex Flg, 5/16"-18 x 1", Serr,
6	231-5145	11	NUT, Flg, USR, 5/16"-18,
7	193607C3	1	SUPPORT, Rotor Front, Standard Wear
7	291127A1	1	GUARD, Rotor Front, Extended Wear, Rice Combine
8	145913	4	BOLT, Hex Flg, 5/16"-18 x 3/4", Serr,
9	145458	10	NUT, Flg, USR, 5/16"-18,
10	233482A1	2	SEAL,
11	443123A1	1	KIT, Extended Wear With Standard Vanes
11	428245A2	1	PACKAGE, Extended Wear With Stainless Steel Vanes
11	428247A2	1	CONE, Standard Wear With Stainless Steel Vanes, Rice Combine
12	413-88	1	BOLT, Hex, 1/2"-13 x 1/2", G5, Full Thd,
13	409-7820	4	BOLT, Hex Flg, 1/2"-13 x 1 1/4", Serr,
14	231-5148	4	NUT, Flg, USR, 1/2"-13,
15	87476880	2	PLATE ASSY., Three Stud
16	195202C1	2	SEAL,
17	135320A1	2	SCREW, 3/8 x 1-1/4
17	139727A1	23	SCREW, 3/8 x 1
18	231-5146	25	NUT, Flg, USR, 3/8"-16,
19	419957A1	1	STRIP, Seal, Rear Service Deck Connection, Cut 1260 mm From 195917C2 (Not Shown)
20	477-73120	1	SCREW, Sltd Serr Truss Hd, 5/16"-18 x 1 1/4", (Not Shown)
21	495-81116	1	WASHER, .344" x 1" x .060", (Not Shown)
22	231-1445	1	NUT, LOCK, 5/16"-18, GB, (Not Shown)
23	86507066	3	NUT, M8 x 1.25, Flg, Cl 10,

PDF created with pdfFactory trial version www.pdffactory.com

09B-12 VANE - EXTENDED WEAR/STANDARD WEAR

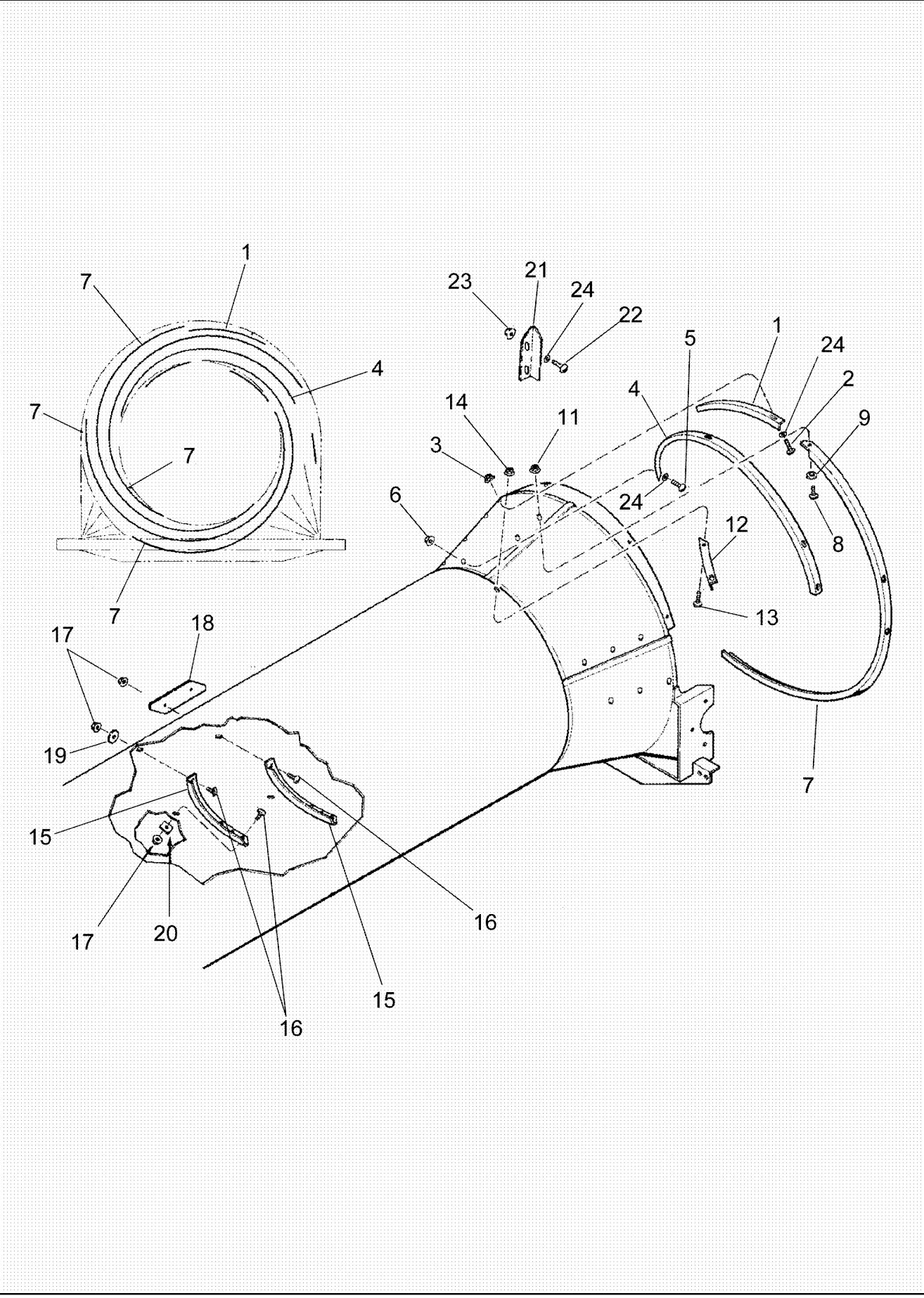

PDF created with pdfFactory trial version www.pdffactory.com

7088 AXIAL-FLOW COMBINE (EU) (4/08-)

09B-12 VANE - EXTENDED WEAR/STANDARD WEAR

ссылка	Номер детали	Кол-во	Описание
1	347913A1	1	STIFFENER, VANE, Cone Top Ring, Extended Wear
1	428281A1	1	STIFFENER, VANE, Cone Top Ring, Standard Wear
2	433734A1	2	BOLT, T-Type, Extended Wear
2	1324105C1	2	BOLT, T-Type, Standard Wear
3	86521609	2	NUT, LOCK, Flg, 3/8"-16, , Extended Wear
3	231-5146	2	NUT, Flg, USR, 3/8"-16, , Standard Wear
4	418655A2	1	STIFFENER, VANE, Cone Short, Extended Wear
4	428280A2	1	STIFFENER, VANE, Cone Short, Standard Wear
5	433734A1	8	BOLT, T-Type
6	86521609	8	NUT, LOCK, Flg, 3/8"-16,
7	418654A2	4	STIFFENER, VANE, Cone Long, Extended Wear
7	428279A2	4	STIFFENER, VANE, Cone Long, Standard Wear
8	433734A1	40	BOLT, T-Type
9	140045	40	WASHER, SPRING, Belleville, M10,
11	86521609	40	NUT, LOCK, Flg, 3/8"-16,
12	411518A2	3	STIFFENER, VANE, Short Front, Extended Wear
12	411517A2	3	STIFFENER, VANE, Short Front, Standard Wear
13	433734A1	6	BOLT, T-Type
14	231-5146	6	NUT, Flg, USR, 3/8"-16,
15	347917A1	13	STIFFENER, VANE, Transport
16	1324105C1	39	BOLT, T-Type
17	231-5146	39	NUT, Flg, USR, 3/8"-16,
18	1318581C1	6	PLATE,
19	55805C1	10	WASHER, 13/32 x 2-1/2 x 5/32
20	570052R1	2	WASHER, 13/32 x 1-1/2 x 3/16
21	347918A1	1	STIFFENER, Vane, Cone Pocket, Extended Wear
21	433282A1	1	VANE, Cone Pocket, Standard Wear
22	433734A1	2	BOLT, T-Type, Extended Wear
22	1324105C1	2	BOLT, T-Type, Standard Wear
23	86521609	2	NUT, LOCK, Flg, 3/8"-16, , Extended Wear
23	231-5146	2	NUT, Flg, USR, 3/8"-16, , Standard Wear
24	140045	12	WASHER, SPRING, Belleville, M10,

PDF created with pdfFactory trial version www.pdffactory.com

7088 AXIAL-FLOW COMBINE (EU) (4/08-)

09B-13 CAGE - FRONT

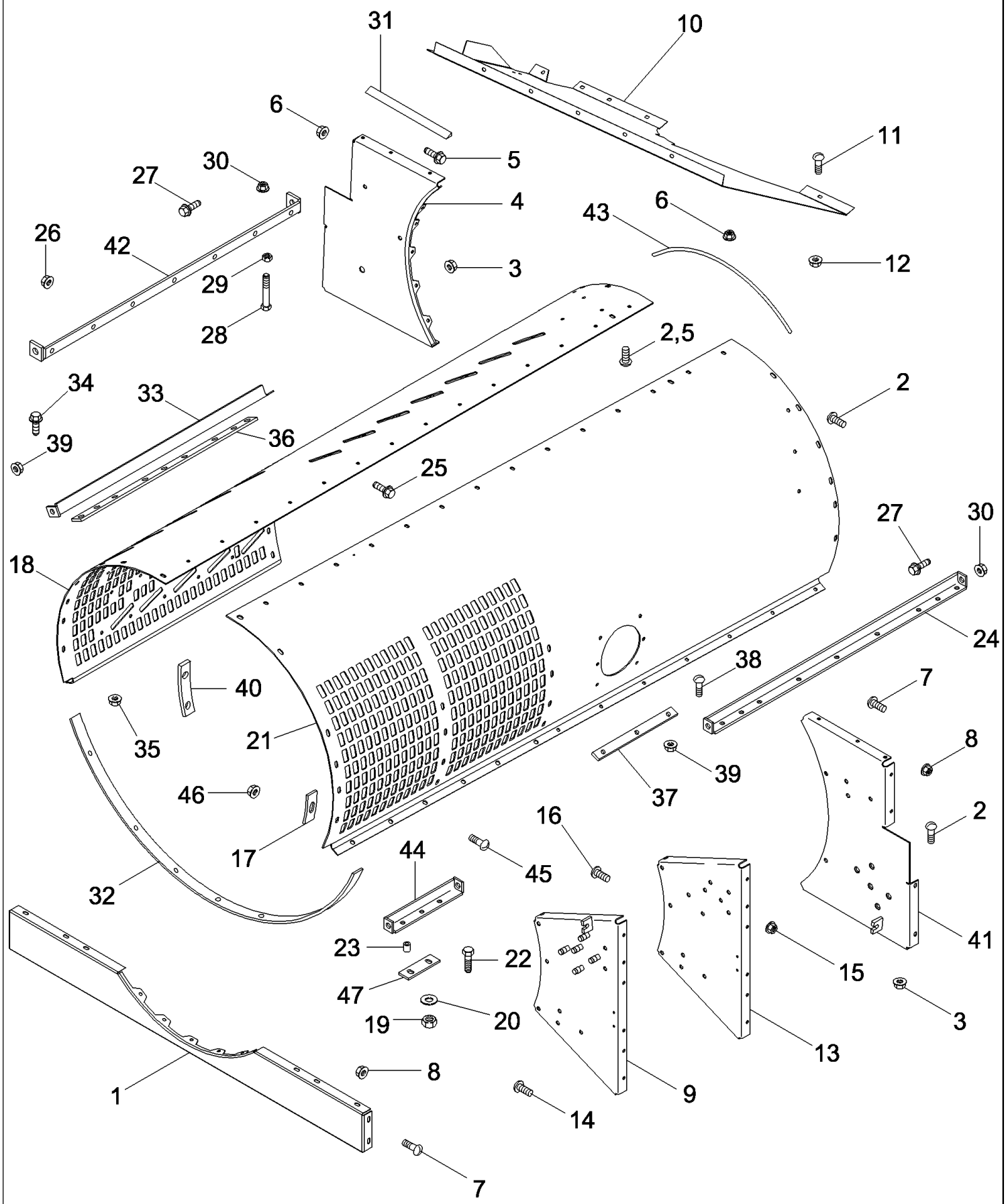

PDF created with pdfFactory trial version www.pdffactory.com

7088 AXIAL-FLOW COMBINE (EU) (4/08-)

09B-13 CAGE - FRONT

ссылка	Номер детали	Кол-во	Описание
1	192385C1	1	SUPPORT,
2	477-73812	22	SCREW, Sltd Serr Truss Hd, 3/8" x 3/4",
2	477-73816	14	SCREW, Sltd Serr Truss Hd, 3/8" x 1",
3	231-5146	34	NUT, Flg, USR, 3/8"-16,
4	1338053C3	1	SUPPORT, Left Hand Front
5	409-7820	4	BOLT, Hex Flg, 1/2"-13 x 1 1/4", Serr,
5	477-73812	8	SCREW, Sltd Serr Truss Hd, 3/8" x 3/4",
5	477-73120	2	SCREW, Sltd Serr Truss Hd, 5/16"-18 x 1 1/4",
6	231-5148	4	NUT, Flg, USR, 1/2"-13,
7	477-73112	22	BOLT, Slotted Tr Hd, 5/16"-18 x 3/4",
8	231-5145	22	NUT, Flg, USR, 5/16"-18,
9	1338057C1	2	SUPPORT, Right and Left Hand, Intermediate
10	87685417	1	SHEET, Front
11	477-73112	8	BOLT, Slotted Tr Hd, 5/16"-18 x 3/4",
11	477-73120	1	SCREW, Sltd Serr Truss Hd, 5/16"-18 x 1 1/4",
12	231-5145	9	NUT, Flg, USR, 5/16"-18,
13	1338042C1	1	SUPPORT, Right Hand, Middle
14	1302160C1	12	SCREW, LOCK, Sltd Truss Hd, 3/8"-16 x 3/4",
15	231-5146	17	NUT, Flg, USR, 3/8"-16,
16	410-7620	9	BOLT, Hex Flg, 3/8"-16 x 1 1/4", Serr,
17	186797C2	1	SUPPORT,
18	1318729C5	1	CAGE, Rotor, Left Hand
19	232-4118	6	NUT, LOCK, 1/2"-13, GC,
20	495-11053	6	WASHER, 1/2", SAE,
21	1321661C3	1	CAGE, Rotor, Right Hand
22	426-832	6	BOLT, Hex, 1/2"-13 x 2", G8,
23	600179R1	6	SPACER, 1/2" X-Strng Pipe x 9/16",
24	188333C1	1	SUPPORT, Right Hand
25	477-73812	8	SCREW, Sltd Serr Truss Hd, 3/8" x 3/4",
25	139727A1	6	SCREW, 3/8 x 1
25	477-73816	1	SCREW, Sltd Serr Truss Hd, 3/8" x 1",
26	231-5146	14	NUT, Flg, USR, 3/8"-16,
27	1302143C1	2	BOLT, 1/2 x 1
28	931008R1	2	BOLT, 1/2 x 3-1/2
29	425-148	2	NUT, Jam, 1/2"-13, G5,
30	231-5148	2	NUT, Flg, USR, 1/2"-13,
31	NSS	2	NOT SERVICED SEPARATELY, SEAL, Cut From 73220C1
32	186750C1	1	SUPPORT,
33	185386C1	1	SUPPORT, Left Hand
34	1319250C1	15	SCREW, 3/8 x 1
35	231-5146	AR	NUT, Flg, USR, 3/8"-16,

PDF created with pdfFactory trial version www.pdffactory.com

ссылка	Номер детали	Кол-во	Описание
36	183323C1	1	STRAP,
37	186785C2	1	REINFORCEMENT, Right Hand, Front
38	135320A1	5	SCREW,
39	231-5146	5	NUT, Flg, USR, 3/8"-16,
40	1318900C1	1	SUPPORT, Left Hand, Front
41	1338043C4	1	SUPPORT, Right Hand, Front
42	1309191C2	1	SUPPORT, Left Hand
43	1309111C1	1	SEAL, 725 mm (28-9/1")
44	182634C3	1	SUPPORT, Right Hand, Front
45	1302143C1	2	BOLT,
46	231-5148	2	NUT, Flg, USR, 1/2"-13,
47	186784C2	3	BAR, Right Hand

PDF created with pdfFactory trial version www.pdffactory.com

09B-14 SUPPORT ASSEMBLY, ROTOR CAGE, REAR

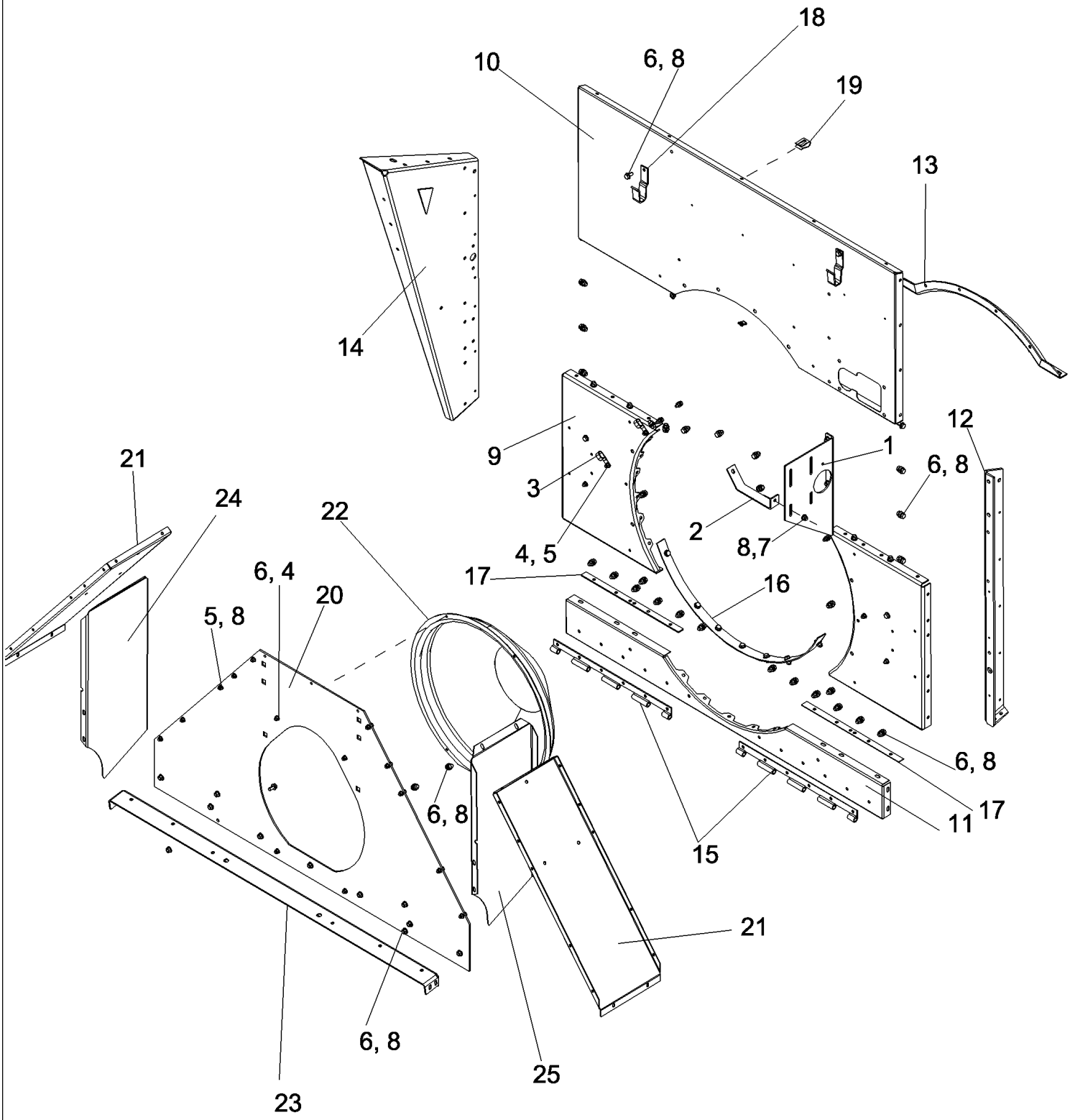

PDF created with pdfFactory trial version www.pdffactory.com

7088 AXIAL-FLOW COMBINE (EU) (4/08-)

09B-14 SUPPORT ASSEMBLY, ROTOR CAGE, REAR

ссылка	Номер детали	Кол-во	Описание
1	87393443	1	SUPPORT ASSY., Speed Adjustment Rotor Drive, Left Hand
2	87393444	1	SUPPORT ASSY., Rotor Speed Adjustment Motor, Left Hand
3	362666R1	2	CLIP, Wire Harness
4	87656137	26	BOLT, Hex Flg, M8 x 20, 10.9, Full Thd,
5	86507066	26	NUT, M8 x 1.25, Flg, Cl 10,
6	87698835	77	BOLT,
7	87698836	1	BOLT,
8	86050279	78	NUT, M10 x 1.5, Flg, Cl 10,
9	191269C4	2	SUPPORT, Rotor Cage, Rear
10	87704305	1	PANEL, Rotor Rear Upper
11	182931C1	1	SUPPORT, Rear Lower Cage
12	84128710	1	BRACKET, Rear Vertical Grain Tank, Right Hand
13	1308696C1	1	SUPPORT, Rear Upper Cage
14	87668629	1	SUPPORT ASSY., Rear Vertical, Grain Tank, Left Hand
15	182893C1	2	HINGE, Bottom
16	182950C1	1	SUPPORT, Cage Filler
17	182895C1	2	FILLER, Rear
18	84138793	2	CLIP, Rocking Wrench
19	86625074	5	NUT,
20	87704303	1	PLATE, Rear Rotor Discharge
21	193393C1	2	SUPPORT, Discharge, Side
22	87619898	1	COVER, Rotor Gear Case 8 Bolt Coupler
23	87757151	1	ANGLE, Engine Deck Support, Front
24	1347215C1	1	SUPPORT, Deflector Discharge, Right Hand, For Machines Equipped With European (Rekord) Chopper
24	182949C2	1	DEFLECTOR, Discharge, Right Hand, For Machines Equipped With Standard Chopper Or Discharge Beater
25	1347214C1	1	SUPPORT, Deflector Discharge, Left Hand, For Machines Equipped With European (Rekord) Chopper
25	182948C2	1	DEFLECTOR, Discharge, Left Hand, For Machines Equipped With Standard Chopper Or Discharge Beater

PDF created with pdfFactory trial version www.pdffactory.com

09B-15 CONCAVES AND GRATES

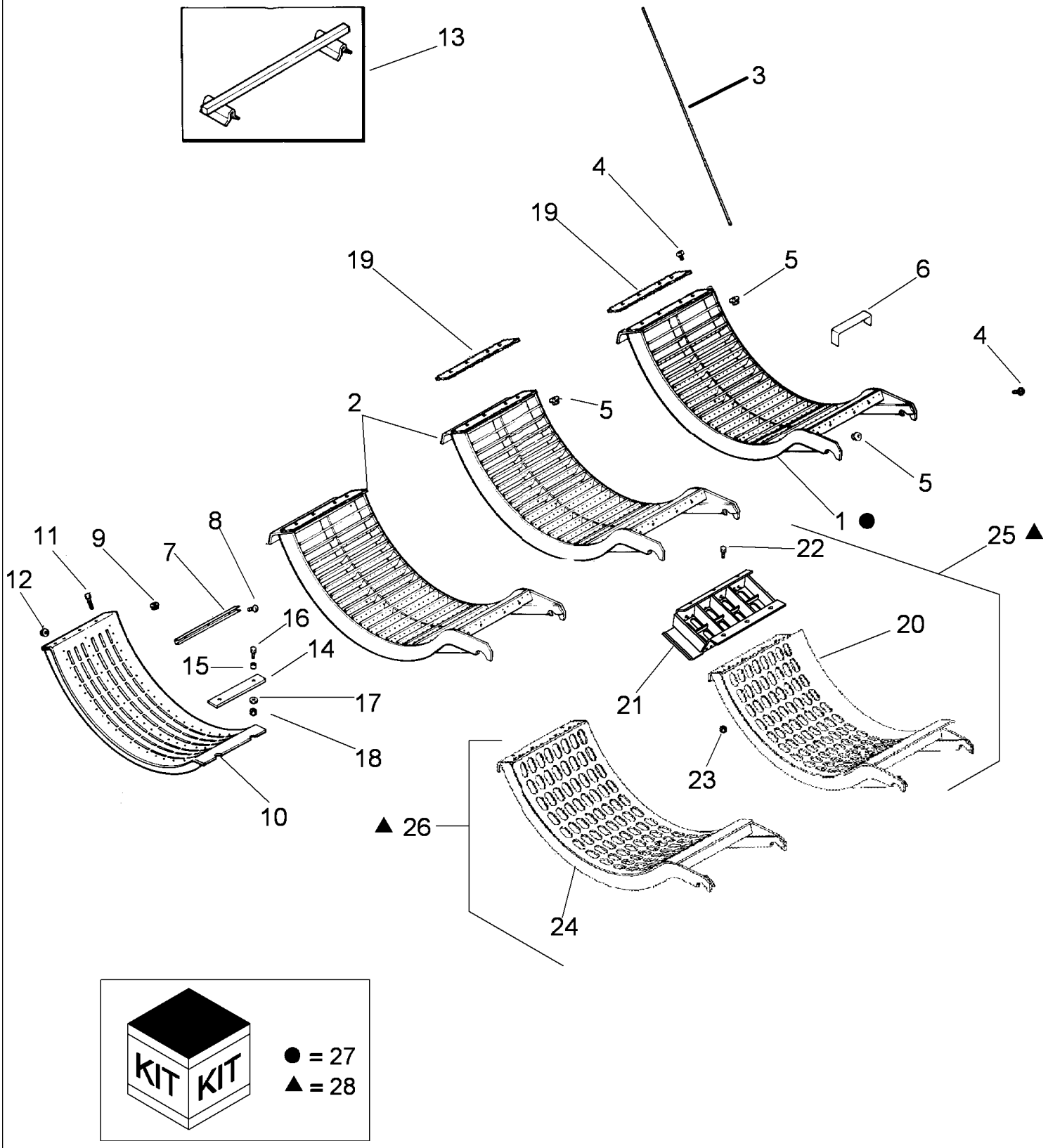

PDF created with pdfFactory trial version www.pdffactory.com

7088 AXIAL-FLOW COMBINE (EU) (4/08-)

09B-15 CONCAVES AND GRATES

ссылка	Номер детали	Кол-во	Описание
1	418647A1	1	CONCAVE, Front, Small Wire, Inc. 3 - 5, 19
1	386188A1	1	CONCAVE, Front, Large Wire, Inc. 3 - 5
1	418645A1	1	CONCAVE, Front, Large Wire, Inc. 3 - 5, 19
1	87456655	1	CONCAVE, Round Bar, Front, Inc. 3 - 5, 19
1	412395A1	2	CONCAVE, No. 2 And 3, Round Bar With Removable Wire, Inc. 3 - 5
2	386189A1	1-2	CONCAVE, No. 2 and 3, Large Wire, Inc. 3 - 5
2	418646A1	2	CONCAVE, No. 2 and 3, Large Wire, Inc. 3 - 5, 19
2	418648A1	1-2	CONCAVE, No. 2 and 3, Small Wire, Inc. 3 - 5, 19
3	386352A1	14	WIRE, Concave, Large Wire
3	418158A1	30	WIRE, Concave, Small Wire
3	412400A1	10	WIRE, Concave, Smooth
4	450-73816	8	SCREW, CrossSerr Truss Hd, 3/8"-16 x 1",
5	231-5146	8	NUT, Flg, USR, 3/8"-16,
6	1309425C1	AR	CHANNEL, Small Wire
6	1309424C1	AR	CHANNEL, Large Wire
7	191536C1	9	CHANNEL, Grate Adjusting, Corn, Used With 191535C2, REF 10
8	477-73112	27	BOLT, Slotted Tr Hd, 5/16"-18 x 3/4",
9	231-5145	27	NUT, Flg, USR, 5/16"-18,
10	442714A1	3	GRILLE, Slotted, Grain
10	1302563C1	3	GRATE, Keystock
11	410-7620	10	BOLT, Hex Flg, 3/8"-16 x 1 1/4", Serr,
11	410-7616	2	BOLT, Hex Flg, 3/8"-16 x 1", Serr, G8,
12	231-5146	12	NUT, Flg, USR, 3/8"-16,
13	87379142	AR	BAR, Small Wire
14	186784C2	3	BAR,
15	600179R1	6	SPACER, 1/2" X-Strng Pipe x 9/16",
16	281058	6	BOLT, Hex, 1/2"-13 x 2", G8,
17	495-11053	6	WASHER, 1/2", SAE,
18	232-4118	6	NUT, LOCK, 1/2"-13, GC,
19	193859C1	2	PLATE, Concave
19	87456656	2	RETAINER, Concave
20	316772A1	1	CONCAVE, Front Smooth Slotted, No. 1
21	316773A1	1	EXTENSION, Concave, Front Smooth, No. 1
21	316774A1	2	EXTENSION, Concave, Front Smooth, No. 2 and 3
22	410-7616	4	BOLT, Hex Flg, 3/8"-16 x 1", Serr, G8,
23	231-5146	4	NUT, Flg, USR, 3/8"-16,
24	316778A1	2	CONCAVE, Front Smooth Slotted, No. 2 and 3
25	352729A1	1	CONCAVE, Slotted Front With Extension, Inc. 20-23
26	352730A1	2	CONCAVE, Slotted 2 And 3 With Extension, Inc. 21-24
27	87360523	1	PACKAGE,SERVICE, DIA, Round Bar Concaves, Inc. 1, 5088
28	348505A1	1	PACKAGE, DIA, Slotted Concave With Extension, Inc. 25, 26

PDF created with pdfFactory trial version www.pdffactory.com

09B-16 CONCAVES - ANCHOR SUPPORTS

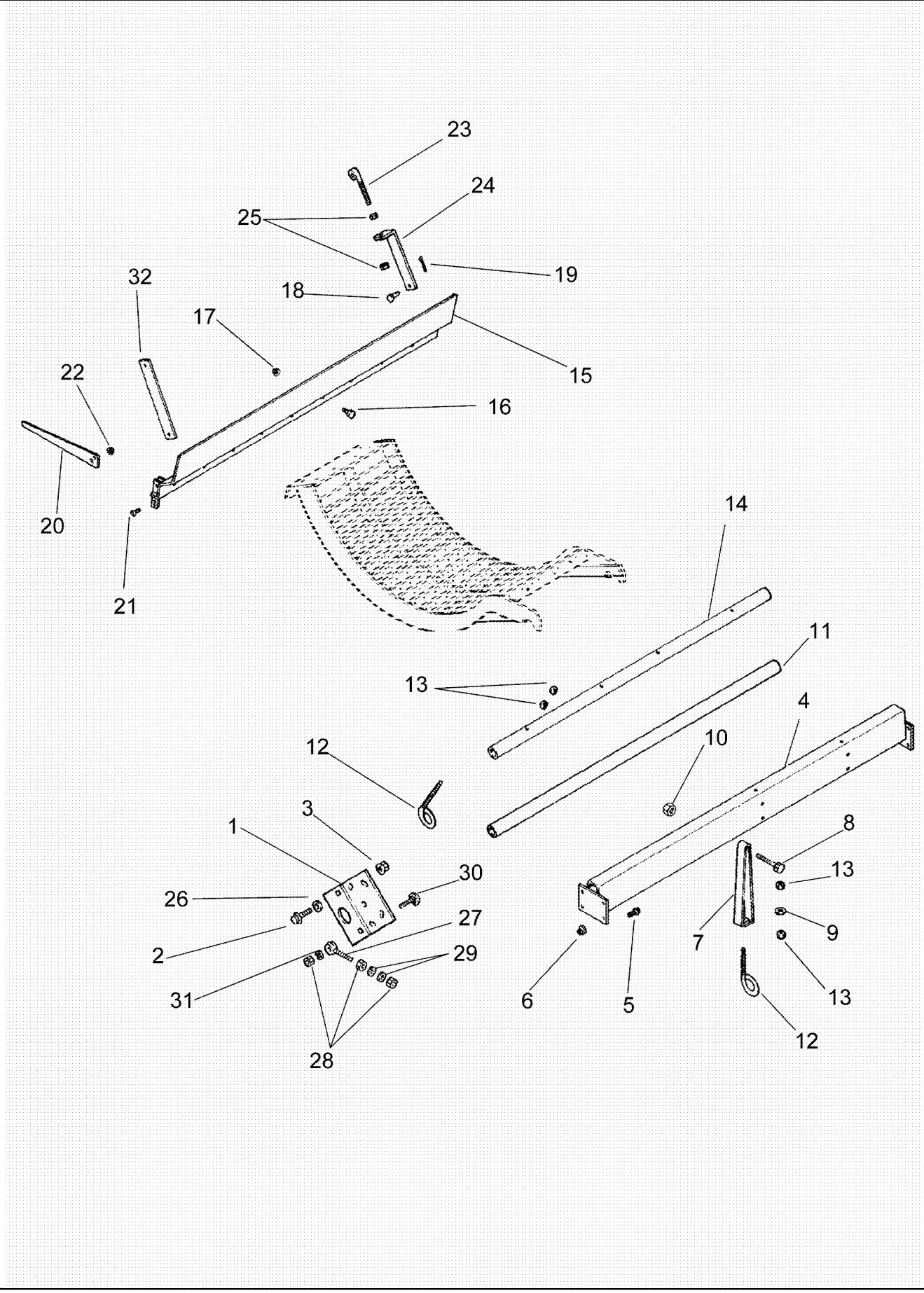

PDF created with pdfFactory trial version www.pdffactory.com

7088 AXIAL-FLOW COMBINE (EU) (4/08-)

09B-16 CONCAVES - ANCHOR SUPPORTS

ссылка	Номер детали	Кол-во	Описание
1	1338041C2	2	SUPPORT,
2	1338052C1	5	SCREW, 5/8 x 1-1/2
3	87301493	5	NUT, Flg, USR, 5/8"-11, G8,
3	1338079C1	5	NUT, 5/8
4	1317229C1	1	SUPPORT, Right Hand
5	1302142C1	6	SCREW, 1/2 x 1-1/4
6	231-5148	6	NUT, Flg, USR, 1/2"-13,
7	1317233C1	2	SUPPORT,
8	426-848	2	BOLT, Hex, 1/2"-13 x 3", G8,
9	496-41053	2	WASHER, 17/32" x 1 1/4" x 3/16",
10	232-4118	2	NUT, LOCK, 1/2"-13, GC,
11	282766A1	1	SUPPORT,
12	87691372	6	EYEBOLT,
13	425-108	12	NUT, 1/2"-13, G5,
14	279086A1	1	SHAFT,
15	87627461	1	SUPPORT ASSY.,
16	410-7616	15	BOLT, Hex Flg, 3/8"-16 x 1", Serr, G8,
17	231-5146	15	NUT, Flg, USR, 3/8"-16,
18	439-1823	2	PIN, HEADED, 1/2" x 1 7/16",
19	432-1216	2	PIN, SPLIT (COTTER), 3/16" x 1",
20	1318880C1	1	SUPPORT,
21	477-82512	2	SCREW, Sltd Serr Truss Hd, 1/4"-20 x 3/4",
22	231-5144	2	NUT, Flg, USR, 1/4"-20,
23	1317348C1	1	BOLT,
24	1318894C2	1	SUPPORT,
25	425-108	2	NUT, 1/2"-13, G5,
26	496-41066	10	WASHER, 21/32" x 1 1/2" x .188", HDN,
27	177662C2	2	EYEBOLT,
28	425-108	6	NUT, 1/2"-13, G5,
29	496-21053	4	WASHER, 17/32" x 1 1/16" x .134",
30	434-824	2	BOLT, CARRIAGE, Short NK, 1/2"-13 x 1 1/2", G5, Full Thd,
31	80679	2	WASHER, LOCK, 1/2",
32	1318893C2	1	BAR,

PDF created with pdfFactory trial version www.pdffactory.com

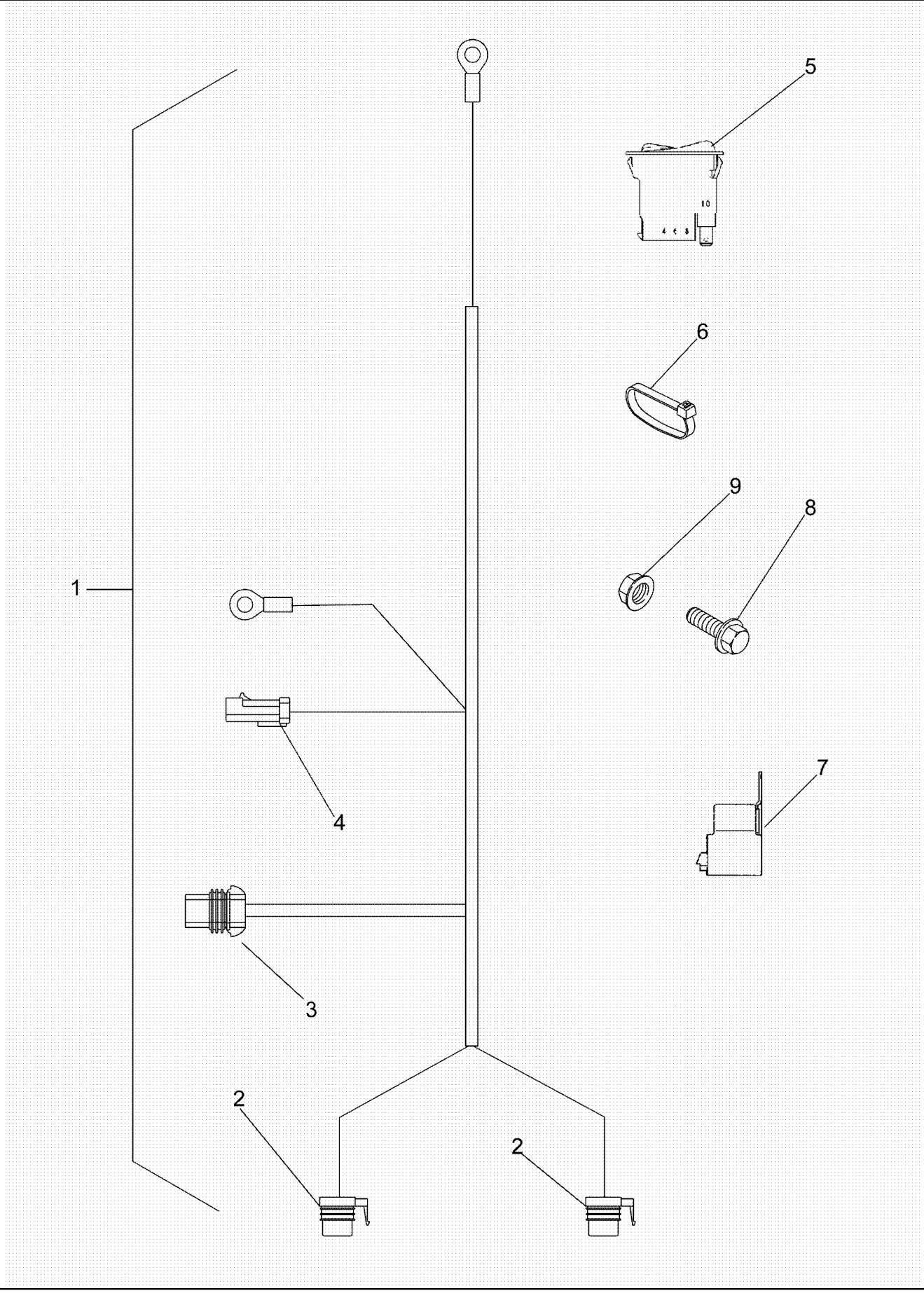

PDF created with pdfFactory trial version www.pdffactory.com

7088 AXIAL-FLOW COMBINE (EU) (4/08-)

09B-17 CONCAVES - CONTROL

ссылка	Номер детали	Кол-во	Описание
1	142607A2	1	HOUSING, Inc. 2, 3
2	551068R1	2	BUSHING,
3	568921R1	1	BUSHING,
4	409-7620	2	BOLT, Hex Flg, 3/8"-16 x 1 1/4", Serr,
4	409-7624	2	BOLT, Hex Flg, 3/8"-16 x 1 1/2", Serr,
5	231-5146	4	NUT, Flg, USR, 3/8"-16,
6	185779A2	1	SUPPORT,
7	409-7616	1	BOLT, Hex Flg, 3/8"-16 x 1", Serr,
8	231-5146	1	NUT, Flg, USR, 3/8"-16,
9	131436A2	1	SHAFT,
10	232-41110	1	NUT, LOCK, 5/8"-11, GC,
11	496-11066	2	WASHER, 21/32" x 1 5/16" x .095", HDN,
12	143239A2	1	MOTOR, ELECTRIC, Concave Control
13	413-880	1	BOLT, Hex, 1/2"-13 x 5", G5,
14	231-1448	1	NUT, 1/2"-13, GB,
15	135406A2	1	GEAR, 20T, Driver
16	413-428	1	BOLT, Hex, 1/4"-20 x 1 3/4", G5,
17	230-4214	1	NUT, LOCK, 1/4"-20, GA,
18	135410A2	1	GEAR, 70T, Driven
19	413-436	1	BOLT, Hex, 1/4"-20 x 2 1/4", G5,
20	230-4214	1	NUT, LOCK, 1/4"-20, GA,
21	144528A1	1	SHIELD,
22	214-1540	1	CLAMP, HOSE, #40, 2.06/3.00 Type F Worm, W/liner,
23	192886C1	1	NUT,
24	192888C1	2	PLATE, Concave Control
25	188168C1	1	PLATE, Concave Indicator
26	276-1458	2	SCREW, SELF TAPPING, Hex Hd, #10 x 1/2",
27	439-1848	1	PIN, HEADED, 1/2" x 3",
28	439-1838	1	PIN, HEADED, 1/2" x 2 3/8",
29	432-1216	2	PIN, SPLIT (COTTER), 3/16" x 1",
30	191422C2	1	LEVER,
31	439-1823	2	PIN, HEADED, 1/2" x 1 7/16",
32	432-1216	2	PIN, SPLIT (COTTER), 3/16" x 1",
33	188351C1	1	HUB,
34	192890C2	1	HUB,
35	413-824	4	BOLT, Hex, 1/2"-13 x 1 1/2", G5, Full Thd,
36	231-5148	4	NUT, Flg, USR, 1/2"-13,
37	87036416	2	SPACER, 3/4" Pipe x 1 1/16",

PDF created with pdfFactory trial version www.pdffactory.com

09B-18 AUGER BED ASSEMBLY

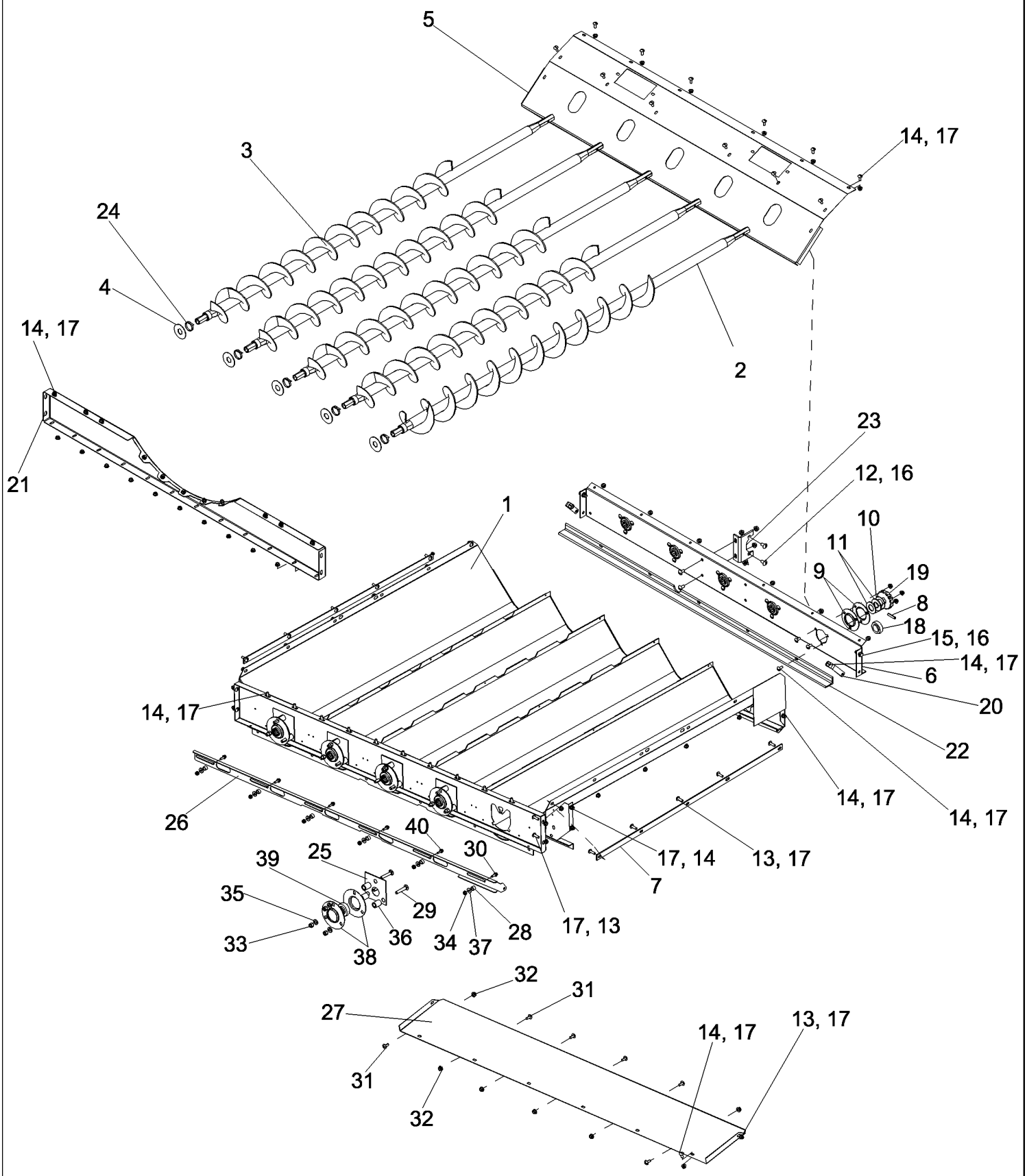

PDF created with pdfFactory trial version www.pdffactory.com

7088 AXIAL-FLOW COMBINE (EU) (4/08-)

09B-18 AUGER BED ASSEMBLY

ссылка	Номер детали	Кол-во	Описание
1	87594299	1	TROUGH ASSY., Auger
2	87649712	1	AUGER, Auger Bed, Rice, Left Hand
3	87649711	4	AUGER, Auger Bed, Rice, Right Hand
4	87643385	5	WASHER, Dust Shield, Auger Bed
5	87379132	1	SHEET, Rotor to Auger Drive Support
6	87379131	1	SUPPORT, Auger Drive Gears
7	87313058	2	STRAP, Auger Trough
8	87040910	5	RETAINER,
9	86603075	10	FLANGE, 3 Bolt
10	495-81191	5	WASHER, 1 5/32" x 2" x .060",
11	495-11106	10	WASHER, 1", SAE,
12	477-73812	4	SCREW, Sltd Serr Truss Hd, 3/8" x 3/4",
13	477-73116	16	SCREW, Sltd Serr Truss Hd, 5/16"-18 x 1",
14	477-73112	64	BOLT, Slotted Tr Hd, 5/16"-18 x 3/4",
15	409-7616	2	BOLT, Hex Flg, 3/8"-16 x 1", Serr,
16	231-5146	6	NUT, Flg, USR, 3/8"-16,
17	231-5145	80	NUT, Flg, USR, 5/16"-18,
18	195293C91	5	BEARING, BALL,
19	194194C1	5	GEAR, Bevel, Spreader Drive
20	87744771	2	SUPPORT, Angle, Pan
21	192385C1	1	SUPPORT, Front and Rear Lower Cage
22	87744775	1	STIFFENER, Angle, Auger Support
23	87744773	1	SUPPORT, Auger Drive Center Bearing
24	306132C1	5	STRAP, CABLE, .30" x 14.5",
25	87649714	5	COVER ASSY, Auger Bed
26	87665145	1	COVER, Auger Trough Clean Out
27	87386833	1	SHEET, Chaffer Front Seal
28	87387134	6	SPACER, Auger Bed Clean Out Door
29	433-636	15	BOLT, CARRIAGE, Short NK, 3/8"-16 x 2 1/4", G5,
30	86521550	5	BOLT, Hex Flg, 1/4"-20 x 3/4", G5, Full Thd,
31	477-73112	6	BOLT, Slotted Tr Hd, 5/16"-18 x 3/4",
32	231-5145	6	NUT, Flg, USR, 5/16"-18,
33	231-4116	15	NUT, LOCK, 3/8"-16, GB,
34	231-5344	6	NUT, LOCK, Flg, 1/4"-20,
35	495-11041	15	WASHER, 3/8", SAE,
36	384257A1	15	SPACER,
37	495-81006	6	WASHER, .266" x 3/4" x .060",
38	380288A1	10	FLANGE, Auger Bed Bearing, 52 mm
39	87650438	5	BEARING, Auger Shaft, Lower
40	86544366	1	BOLT, Hex Flg, 1/4"-20 x 1", G5, Full Thd,

PDF created with pdfFactory trial version www.pdffactory.com

09B-19 SHAKER SHAFT DRIVE

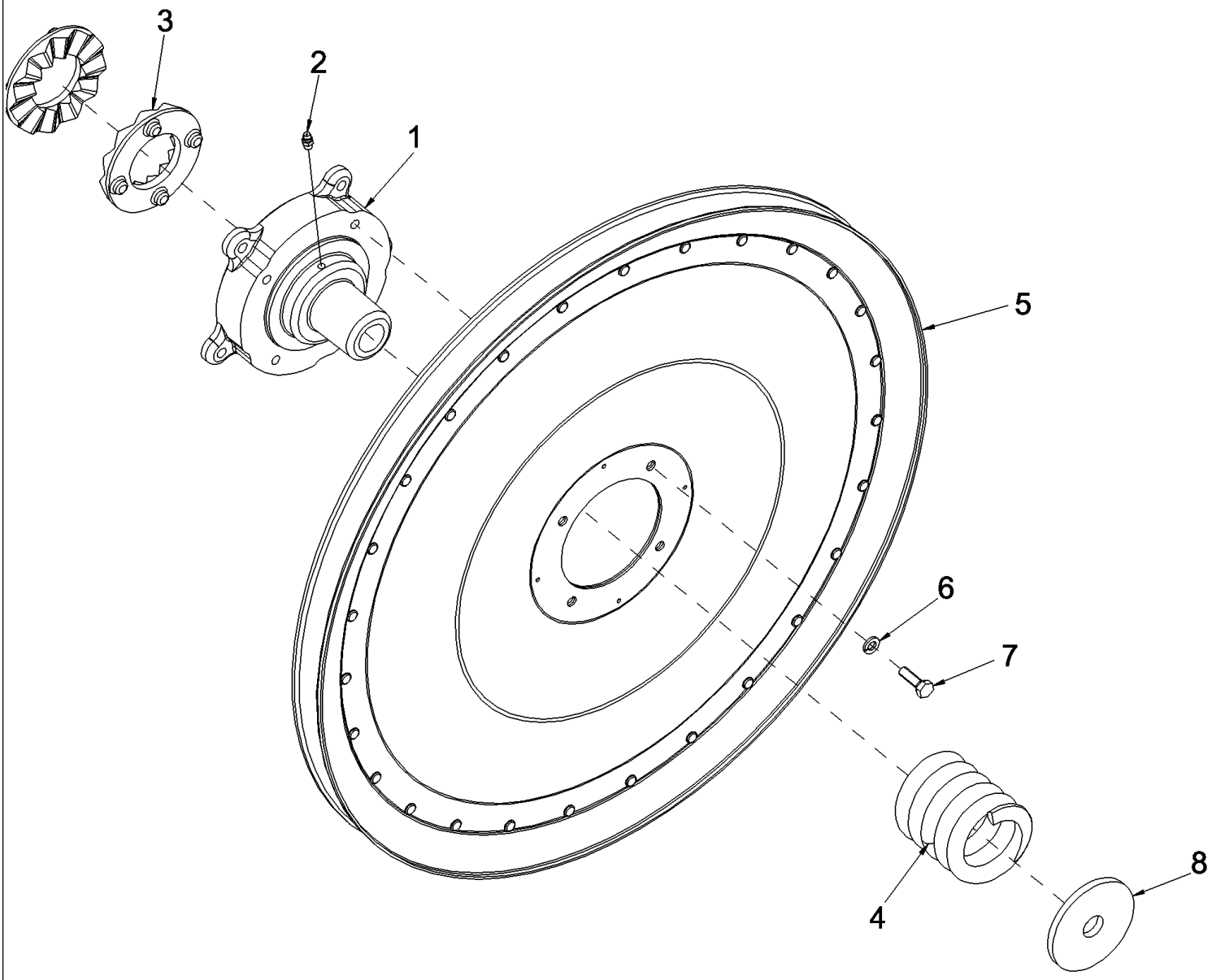

PDF created with pdfFactory trial version www.pdffactory.com

7088 AXIAL-FLOW COMBINE (EU) (4/08-)

09B-19 SHAKER SHAFT DRIVE

ссылка	Номер детали	Кол-во	Описание
1	1303136C2	1	HUB, Shaker Drive
2	219-87	1	NIPPLE, LUBE, 1/4"-28 x .56" lg, Self-Tap,
3	B12170	2	RATCHET, Slip Clutch
4	19302K	1	SPRING, Shaker Shaft Drive
5	87735279	1	PULLEY, Shaker Shaft Driven
6	492-11031	4	WASHER, LOCK, 5/16",
7	413-512	4	BOLT, Hex, 5/16"-18 x 3/4", G5, Full Thd,
8	167521H1	1	WASHER,

PDF created with pdfFactory trial version www.pdffactory.com

09B-20 SHAKER DRIVE SHIELD, LEFT HAND

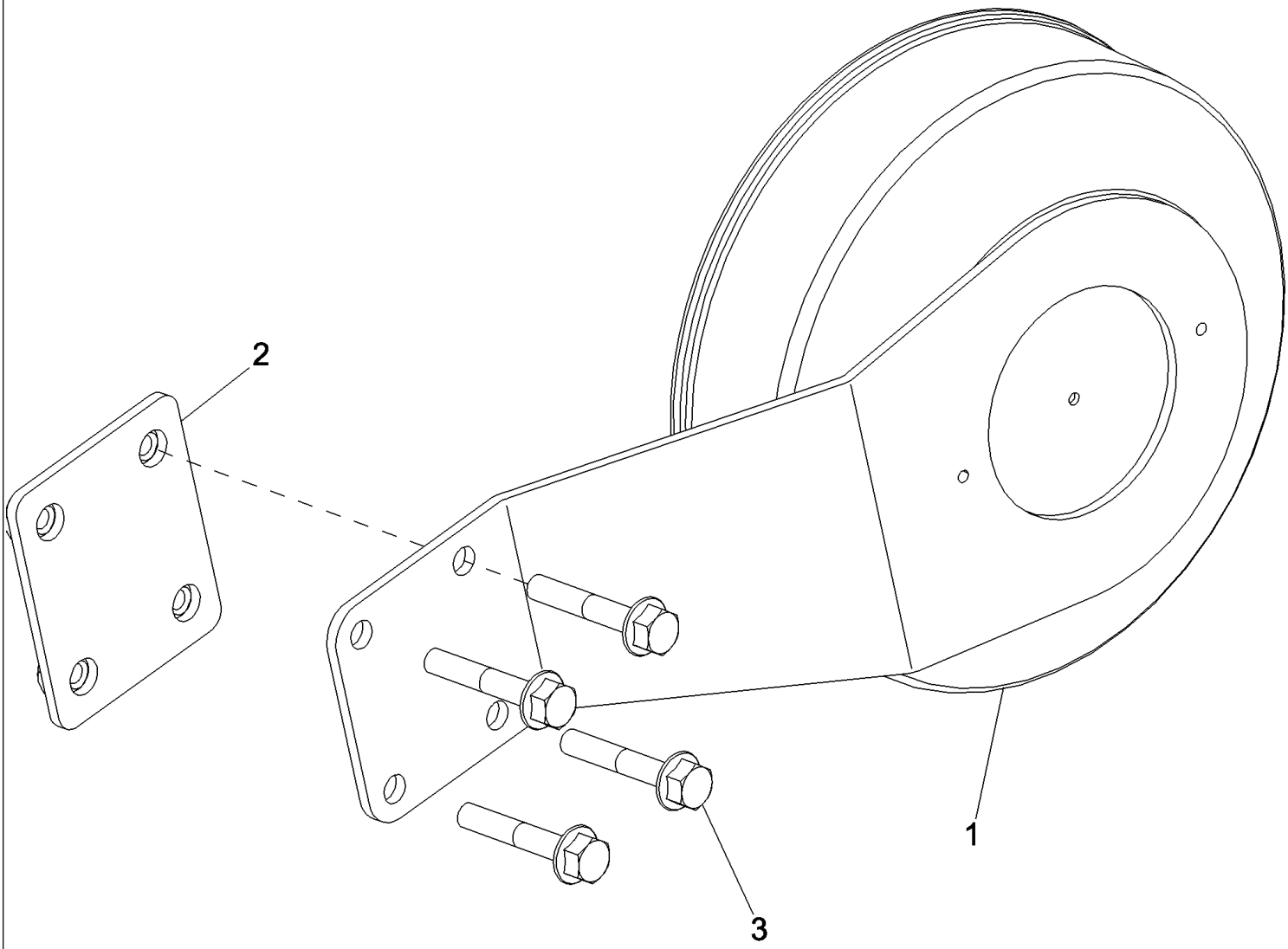

PDF created with pdfFactory trial version www.pdffactory.com

7088 AXIAL-FLOW COMBINE (EU) (4/08-)

09B-20 SHAKER DRIVE SHIELD, LEFT HAND

ссылка	Номер детали	Кол-во	Описание
1	84171364	1	COVER ASSY, Shaker Arm, Left Hand
2	84171360	1	BRACKET, Shaker Arm Cover
3	87698832	4	BOLT,

PDF created with pdfFactory trial version www.pdffactory.com

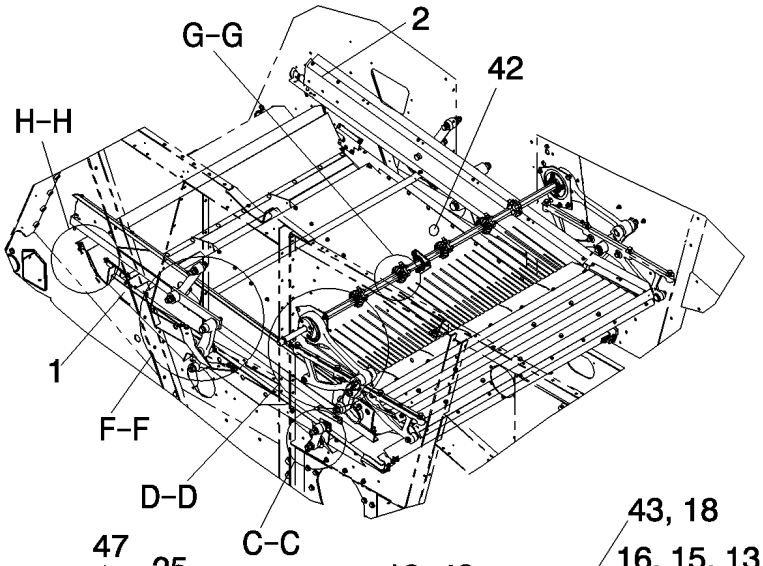

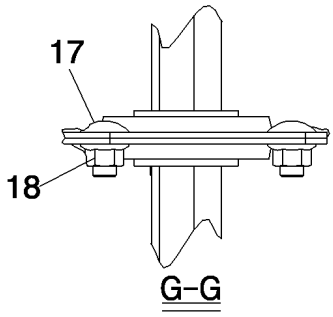

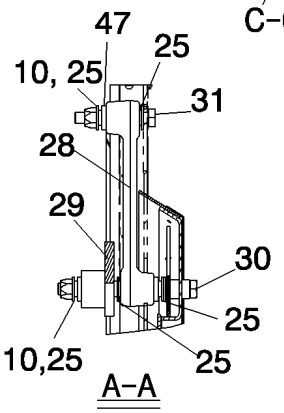

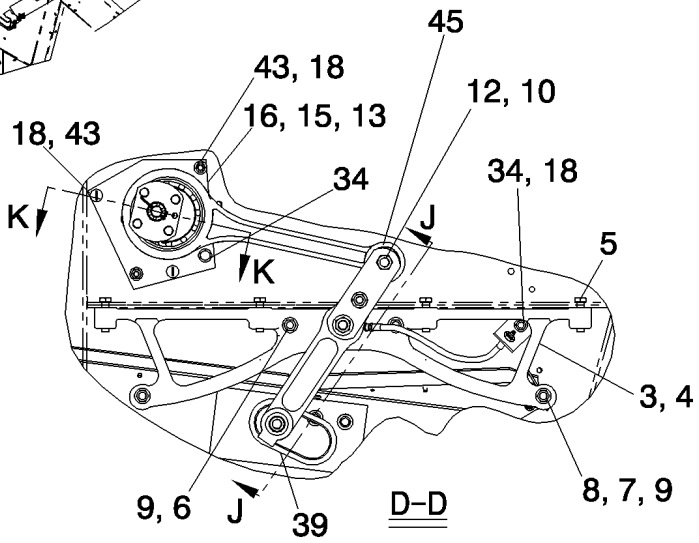

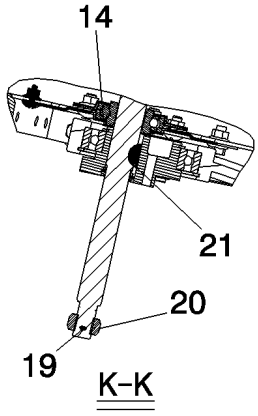

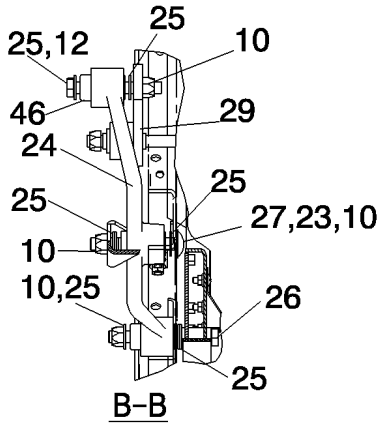

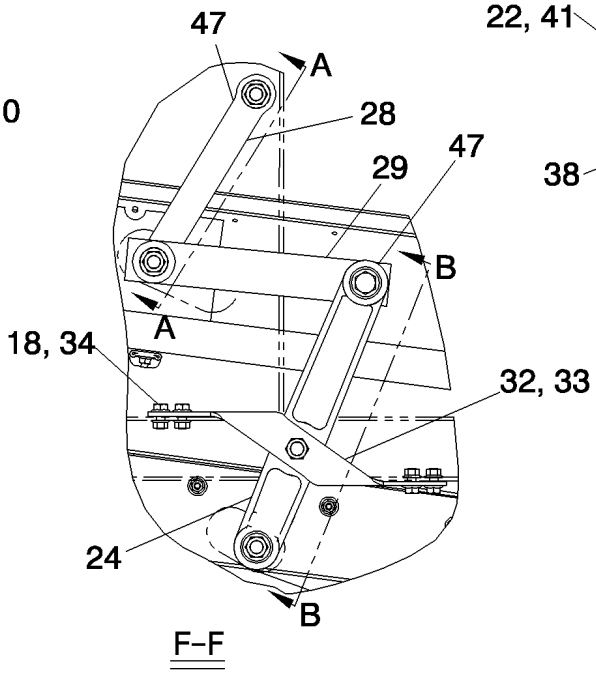

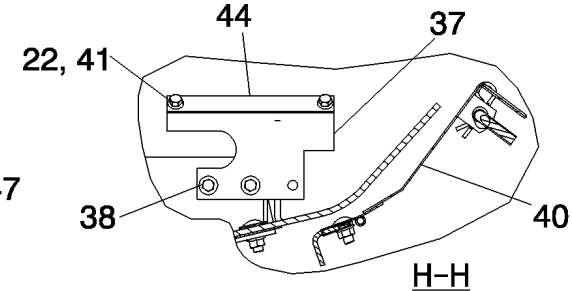

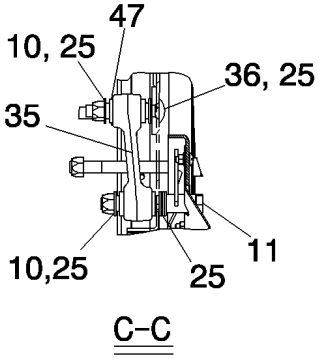

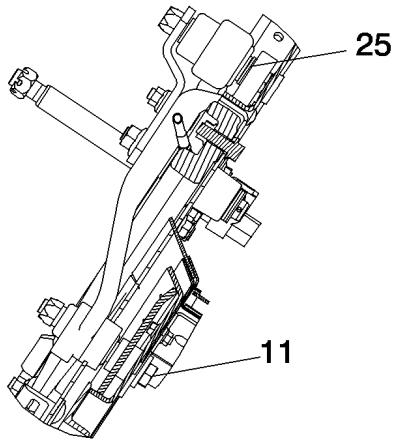

PDF created with pdfFactory trial version www.pdffactory.com

7088 AXIAL-FLOW COMBINE (EU) (4/08-)

09B-21 CLEANING SYSTEM

ссылка	Номер детали	Кол-во	Описание
1	NSS	1	NOT SERVICED SEPARATELY, SUPPORT ASSEMBLY, Lower Sieve, See Figure 09B-22
2	NSS	1	NOT SERVICED SEPARATELY, FRAME, Upper Sieve, See Figure 09B-23
3	NSS	1	NOT SERVICED SEPARATELY, HANGER ASSEMBLY, Arm Right Hand, See Figure 09B-24
4	NSS	1	NOT SERVICED SEPARATELY, HANGER ASSEMBLY, Arm Left Hand, See Figure 08-21
5	337476	8	BOLT, Hex, M12 x 50, 10.9,
6	87695413	4	BOLT,
7	498-81006	4	WASHER, 17/32" x 1 1/4" x .120", Sq Hole,
8	87495309	4	BOLT,
9	86512497	8	NUT, M12 x 1.75, Flg, Cl 10,
10	84194234	18	NUT,
11	392531	5	BOLT, Hex, M16 x 130, 10.9,
12	43281	3	BOLT, Hex, M16 x 120, 10.9,
13	NSS	1	NOT SERVICED SEPARATELY, BEARING ASSEMBLY, Cleaning System, See Figure 09B-25
14	495-81213	2	WASHER, 1 13/32" x 2" x .060",
15	87672051	1	ARM ASSY., Right Hand, Inc. 45
16	NSS	1	NOT SERVICED SEPARATELY, SHAFT ASSEMBLY, Cleaning System Drive, See Figure 09B-25
17	87682390	2	BOLT,
18	86050279	20	NUT, M10 x 1.5, Flg, Cl 10,
19	432-828	1	PIN, SPLIT (COTTER), 1/8" x 1 3/4",
20	425-1212	1	NUT, SLOTTED, 3/4"-10, G5,
21	126-124	1	KEY, WOODRUFF, #15, 1/4" x 1", HT,
22	86050300	4	NUT, M6 x 1, Flg, Cl10,
24	87672100	2	ARM ASSY., Shoe, Inc. 46
25	496-11066	58	WASHER, 21/32" x 1 5/16" x .095", HDN,
26	1791248	2	BOLT,
27	84129686	2	BOLT,
28	87671724	2	ARM ASSY., Rear Chaffer Hanger, Inc. 47
29	87671722	2	ARM ASSY., Connector Bar, Inc. 47
30	9840670	2	BOLT, Hex, M16 x 180, 10.9,
31	86541970	2	BOLT, Hex, M16 x 100, 10.9,
32	87735883	1	SUPPORT, Shoe Lever, Right Hand
33	87735869	1	SUPPORT, Shoe Lever, Left Hand
34	87698835	10	BOLT,
35	87671723	2	ARM ASSY., Front Shoe Hanger, Inc. 47
36	84129685	2	BOLT,
37	187187A2	2	PLATE, Shoe Rail Seal Extension
38	86625200	4	SCREW, SELF TAPPING, Hex Flg Hd, M8 x 20,
39	1302644C2	2	SEAL, Chaffer Lever
40	NSS	1	NOT SERVICED SEPARATELY, TAILGATE, Shoe Door Assembly
41	87695418	4	BOLT,

PDF created with pdfFactory trial version www.pdffactory.com

ссылка	Номер детали	Кол-во	Описание
42	205-126	2	BUTTON, HOLE PLUG, 1 3/4",
43	87573369	8	SCREW,
44	187204A1	2	BAR, Shoe Sieve Seal Extension
45	87376924	1	BUSHING, Right Hand Pitman Arm
46	87538599	3	BUSHING, Shoe Arm
47	87538600	10	BUSHING, RUBBER, Rear Chaffer Hanger Arm, Connector Bar Arm, Front Shoe Hanger Arm

PDF created with pdfFactory trial version www.pdffactory.com

09B-22 SUPPORT ASSEMBLY, LOWER SIEVE

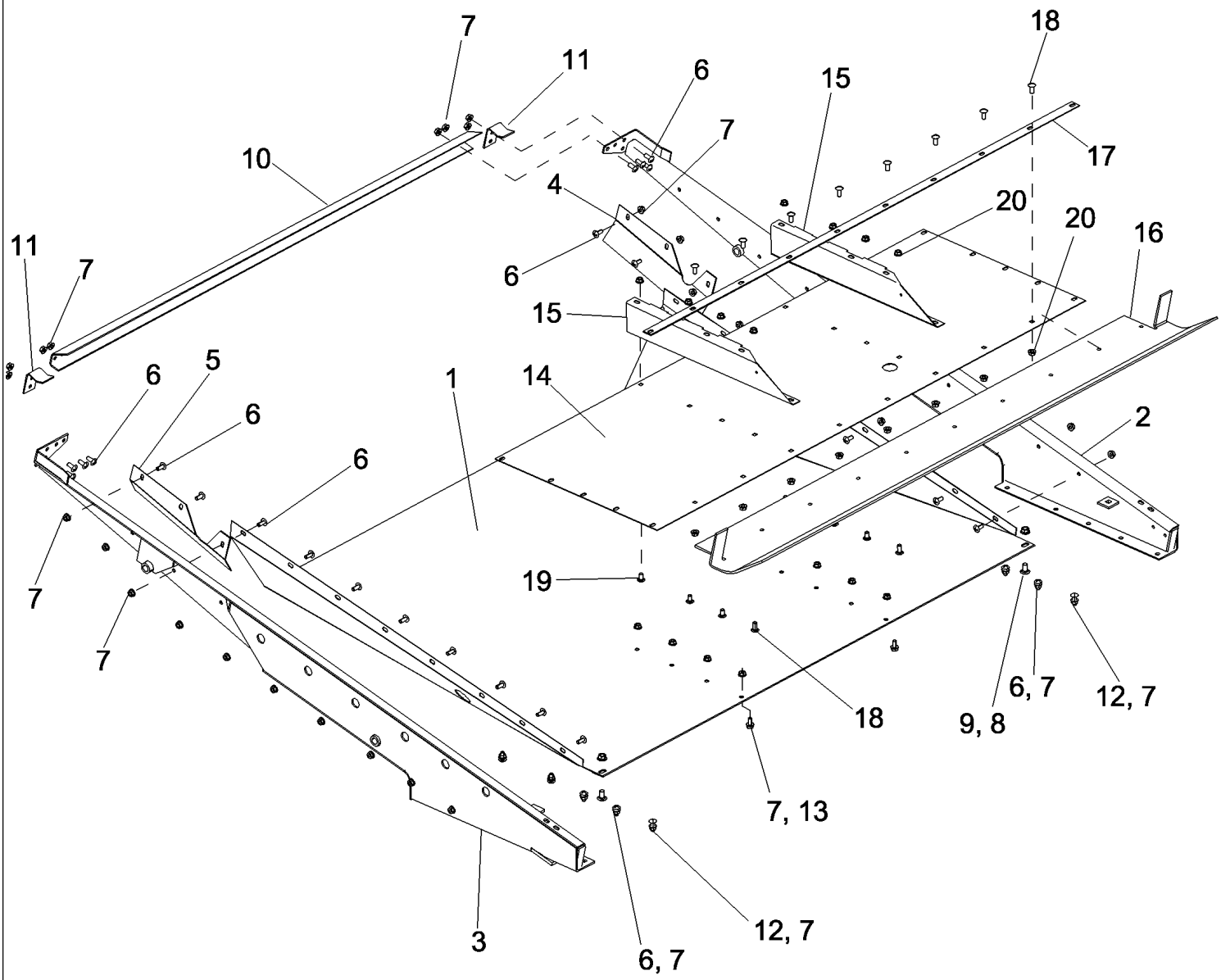

PDF created with pdfFactory trial version www.pdffactory.com

7088 AXIAL-FLOW COMBINE (EU) (4/08-)

09B-22 SUPPORT ASSEMBLY, LOWER SIEVE

ссылка	Номер детали	Кол-во	Описание
1	87376644	1	PAN ASSY., Shoe Clean Grain Return
2	84169474	1	RAIL, Shoe, Right Hand
3	84169462	1	RAIL, Shoe, Left Hand
4	87376646	1	SUPPORT ASSY., Forward Shoe Return, Right Hand
5	87376645	1	SUPPORT ASSY., Forward Shoe Return, Left Hand
6	847-3820	36	SCREW, Sltd Tr Hd, M8 x 20, 10.9, Serr,
7	825-5148	46	NUT, M8, Flg Ser,
8	87682390	2	BOLT,
9	86050279	2	NUT, M10 x 1.5, Flg, Cl 10,
10	87376643	1	CHANNEL, Shoe Rail Front Cross
11	87376647	2	CLIP, Front Shoe Retainer
12	87682384	2	BOLT,
13	87681207	8	BOLT,
14	87613461	1	SHEET ASSY., Tailing Return
15	87613403	2	SUPPORT ASSY., Tailing Return Pan
16	1979194C2	1	SEAL, Tailing Sheet
17	87376640	1	STRAP, Seal
18	87682383	10	BOLT,
19	87020310	6	BOLT, Short NK, M8 x 16, Cl 10.9, Full Thd,
20	86507066	16	NUT, M8 x 1.25, Flg, Cl 10,

PDF created with pdfFactory trial version www.pdffactory.com

09B-23 FRAME, UPPER SIEVE

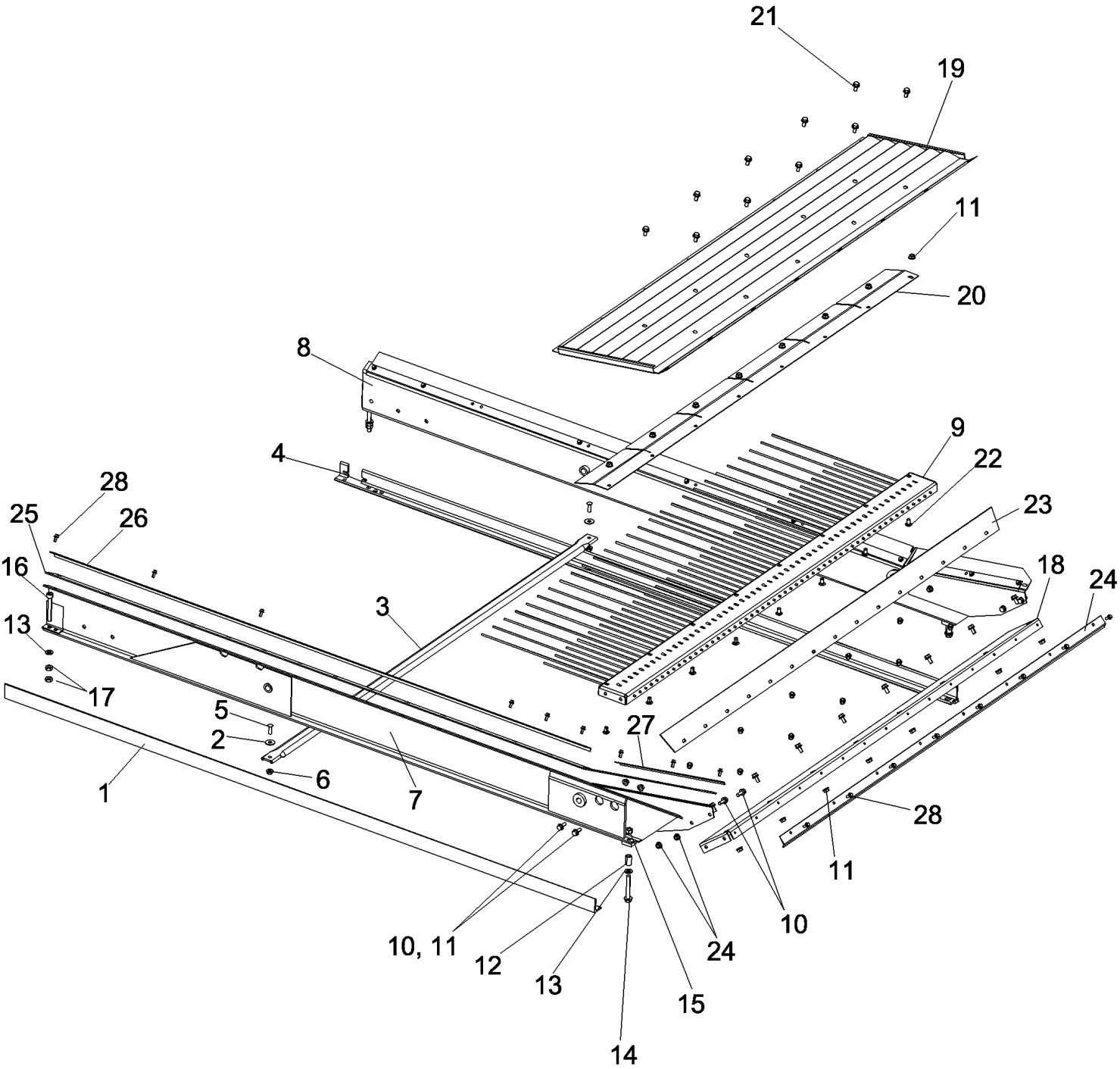

PDF created with pdfFactory trial version www.pdffactory.com

7088 AXIAL-FLOW COMBINE (EU) (4/08-)

09B-23 FRAME, UPPER SIEVE

ссылка	Номер детали	Кол-во	Описание
1	84127484	1	ANGLE, Upper Sieve, Left Hand
2	495-81116	2	WASHER, .344" x 1" x .060",
3	87379127	1	ANGLE BAR, Chaffer Spacer
4	84127486	1	ANGLE, Upper Sieve, Right Hand
5	374897	2	SCREW, Hex Flat Hd, M8 x 25, 4.8,
6	825-5148	2	NUT, M8, Flg Ser,
7	84169439	1	RAIL, Chaffer, Right Hand
8	84169374	1	RAIL, Chaffer, Left Hand
9	87725364	1	Grain Pan
10	87656137	8	BOLT, Hex Flg, M8 x 20, 10.9, Full Thd,
11	86507066	24	NUT, M8 x 1.25, Flg, Cl 10,
12	645342C1	2	SPACER, 5/8" Tube x 1",
13	85700654	4	WASHER,
14	857-10070	2	BOLT, Hex Flg, M10 x 70, 10.9,
15	86512554	2	NUT, LOCK, M10 x 1.5, Cl 10,
16	863-10075	2	SCREW, Hex Soc Hd, M10 x 75, 12.9,
17	87564742	4	NUT,
18	87379129	1	SUPPORT, Chaffer Frame
19	87473364	1	PAN ASSY., Grain
20	1994858C1	1	COVER, Sieve Finger
21	87681207	8	BOLT,
22	87020310	4	BOLT, Short NK, M8 x 16, Cl 10.9, Full Thd,
23	192049C1	1	STRIP, Chaffer Front
24	87387066	1	CLAMP, Front Chaffer Seal
25	1325331C1	2	STRIP, SEALING, Chaffer Frame
26	87379123	2	CLAMP, Chaffer Rail Seal
27	87387119	2	CLAMP, Chaffer Extension Seal
28	86625199	26	SCREW, SELF TAPPING, Hex Flg Hd, M6 x 13,

PDF created with pdfFactory trial version www.pdffactory.com

09B-24 HANGER ASSEMBLY ARM, RIGHT AND LEFT HAND

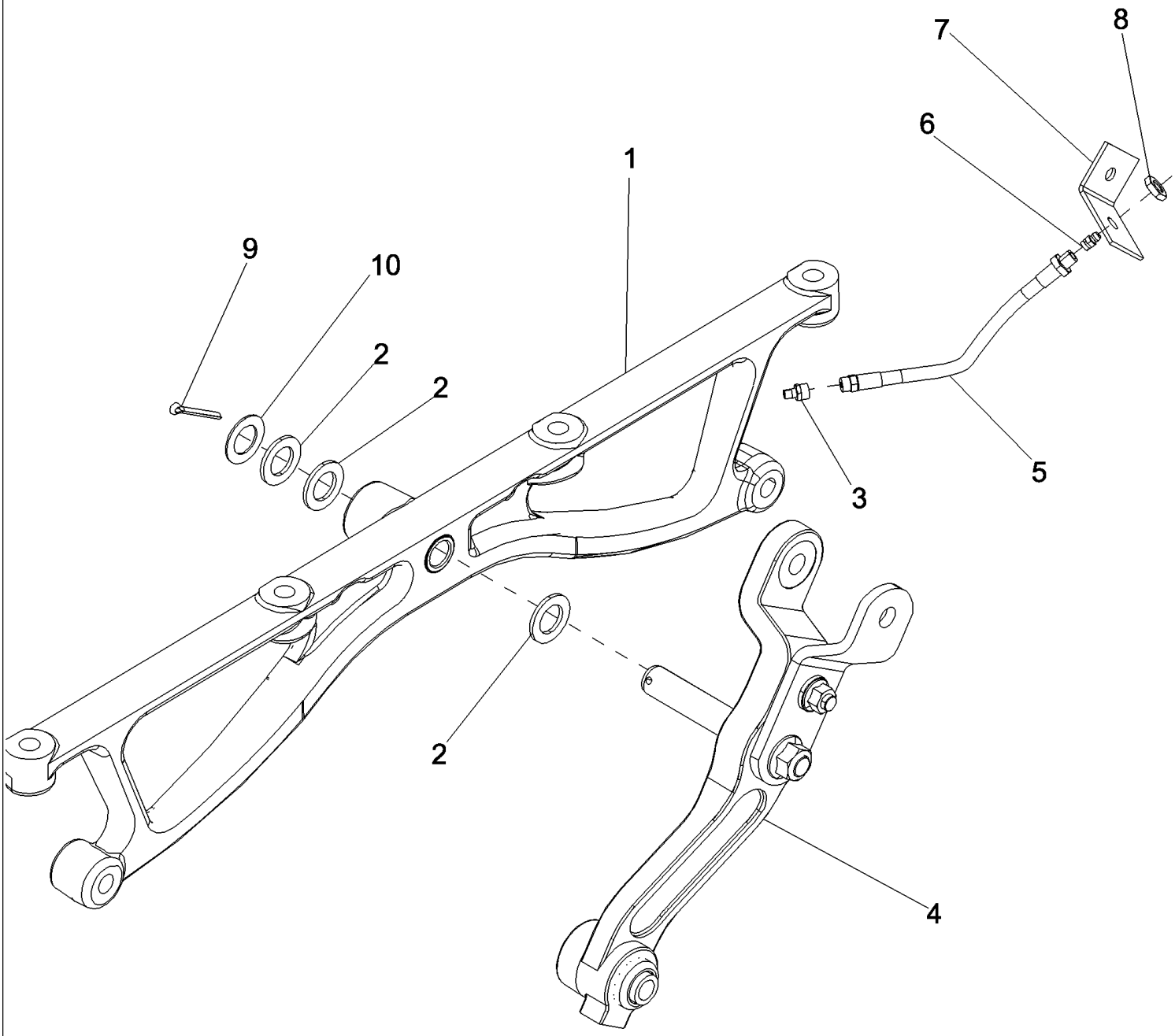

PDF created with pdfFactory trial version www.pdffactory.com

7088 AXIAL-FLOW COMBINE (EU) (4/08-)

09B-24 HANGER ASSEMBLY ARM, RIGHT AND LEFT HAND

ссылка	Номер детали	Кол-во	Описание
1	84128519	2	PIVOT ASSY., Shoe Shaker Assembly
2	495-81057	6	WASHER, 29/32" x 1 1/2" x .120",
3	219-418	1	ADAPTER, 1/4"-1/8 NPTF,
4	84128533	2	ARM ASSY., Shoe Shaker Assembly
5	937773R91	1	HOSE, Bank Lube
6	219-8	2	NIPPLE, LUBE, 1/4"-28 NPT x .54" lg,
7	178960C1	1	BRACKET, Steering Rear
8	F53473	1	NUT,
9	432-1228	2	PIN, SPLIT (COTTER), 3/16" x 1 3/4",
10	495-81056	2	WASHER, 29/32" x 1 1/2" x .060",

PDF created with pdfFactory trial version www.pdffactory.com

09B-25 SHAFT AND BEARING ASSEMBLY, CLEANING SYSTEM DRIVE

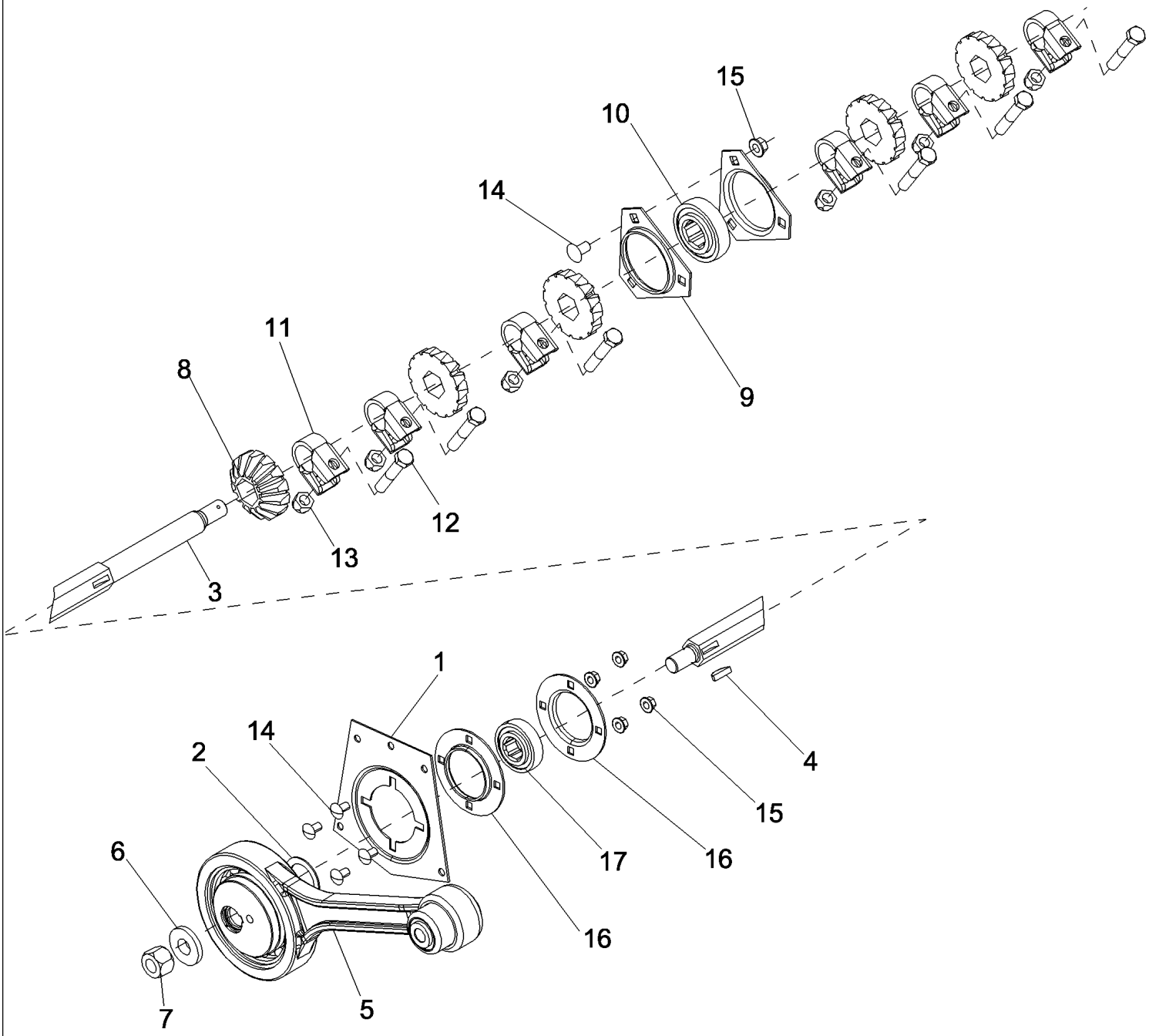

PDF created with pdfFactory trial version www.pdffactory.com

7088 AXIAL-FLOW COMBINE (EU) (4/08-)

09B-25 SHAFT AND BEARING ASSEMBLY, CLEANING SYSTEM DRIVE

ссылка	Номер детали	Кол-во	Описание
1	1302221C1	2	RETAINER, Shaker Shaft Bearing
2	495-81213	1	WASHER, 1 13/32" x 2" x .060",
3	1322616C2	1	SHAFT, Auger Bed And Shaker Drive
4	126-124	1	KEY, WOODRUFF, #15, 1/4" x 1", HT,
5	87672050	1	ARM ASSY., Left Hand Assembly
6	1979580C1	1	WASHER, Shaker Cam
7	231-41112	1	NUT, LOCK, 3/4"-10, GB,
8	87375654	5	GEAR, Auger Bed Driven
9	86620026	2	FLANGE,
10	87376564	1	BEARING, Shaker Shaft
11	225265R1	6	CLAMP, Tie Rod
12	300809	6	BOLT, Hex, M12 x 65, 8.8,
13	100038	6	NUT, M12 x 1.75, Cl 8,
14	87682390	9	BOLT,
15	86050279	9	NUT, M10 x 1.5, Flg, Cl 10,
16	87430518	4	FLANGE,
17	87376564	2	BEARING, Shaker Shaft

PDF created with pdfFactory trial version www.pdffactory.com

7088 AXIAL-FLOW COMBINE (EU) (4/08-)

09B-26 TAILGATE, SHOE DOOR ASSEMBLY

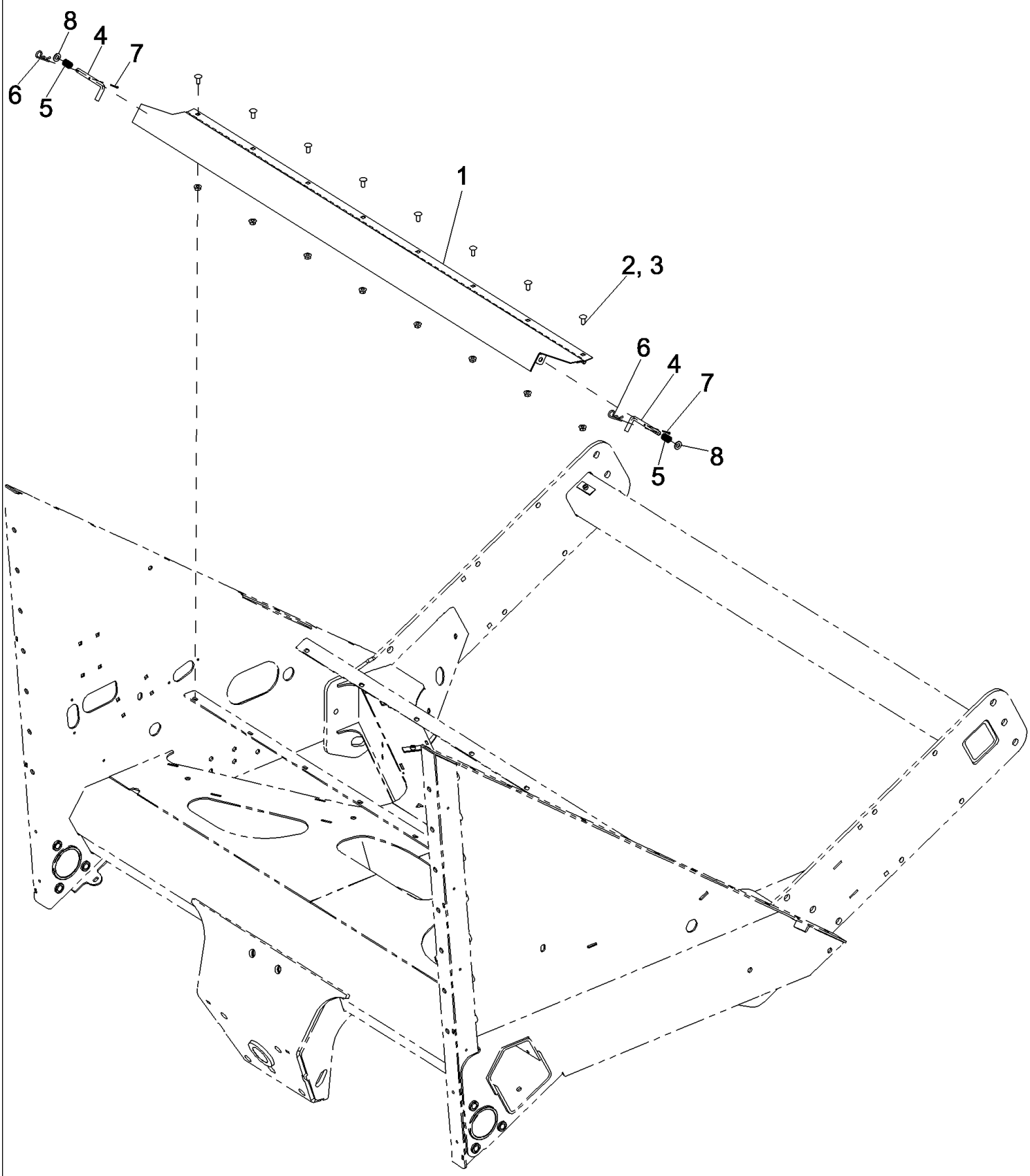

PDF created with pdfFactory trial version www.pdffactory.com

7088 AXIAL-FLOW COMBINE (EU) (4/08-)

09B-26 TAILGATE, SHOE DOOR ASSEMBLY

ссылка	Номер детали	Кол-во	Описание
1	87598213	1	TAILGATE, Cleaning Shoe
2	87682383	8	BOLT,
3	86507066	8	NUT, M8 x 1.25, Flg, Cl 10,
4	186736C3	2	ROD, Tailgate Lock
5	540815R2	2	SPRING,
6	586591R1	2	PIN, SPLIT (COTTER),
7	432-612	2	PIN, SPLIT (COTTER), 3/32" x 3/4",
8	495-11041	2	WASHER, 3/8", SAE,

PDF created with pdfFactory trial version www.pdffactory.com

09B-27 SIEVE ASSEMBLY, UPPER, MANUAL

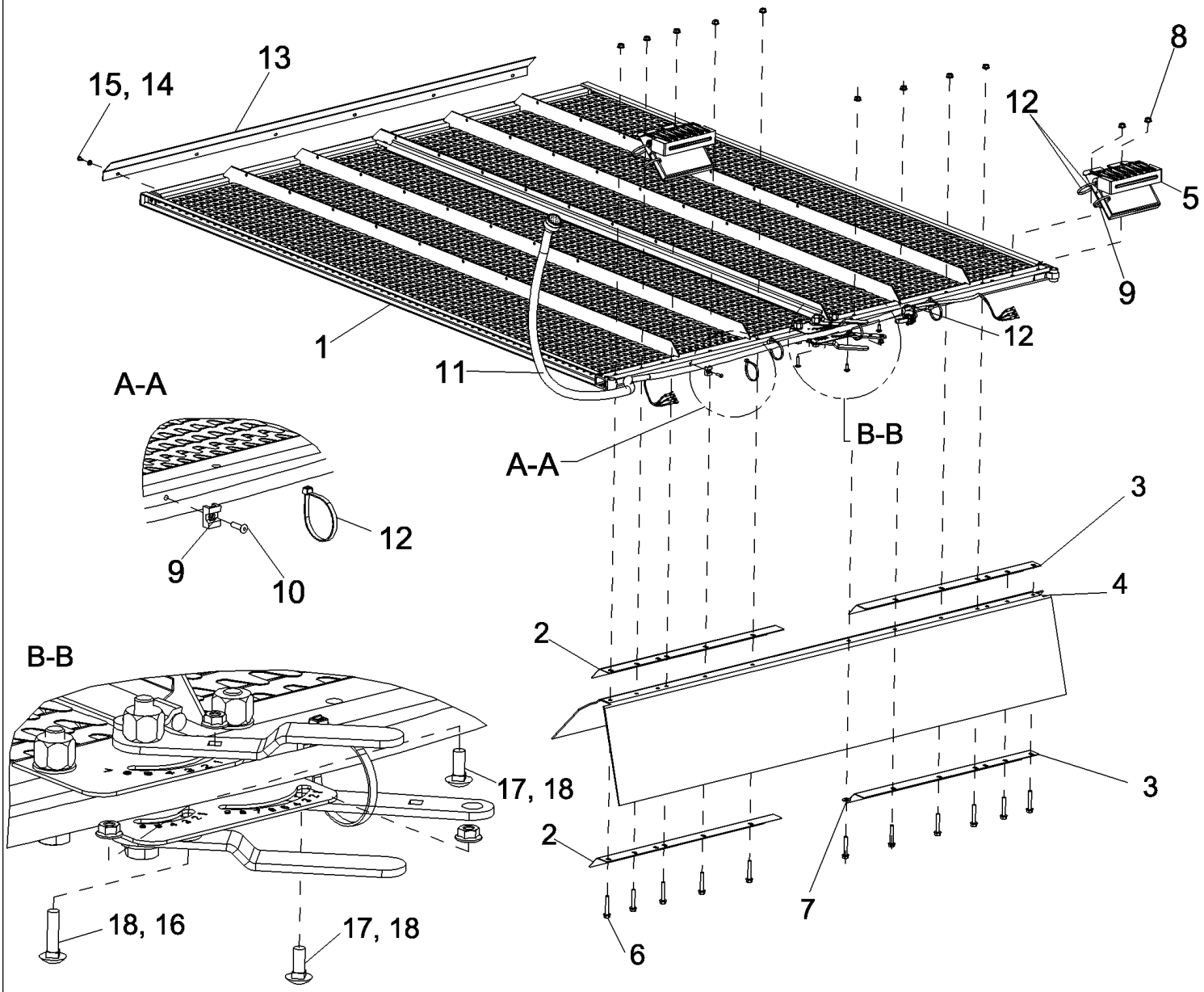

PDF created with pdfFactory trial version www.pdffactory.com

7088 AXIAL-FLOW COMBINE (EU) (4/08-)

09B-27 SIEVE ASSEMBLY, UPPER, MANUAL

ссылка	Номер детали	Кол-во	Описание
1	87710707	1	SIEVE, Upper Peterson, 6088, 7088
1	87710706	1	SIEVE, Upper 1-5/8 Corn
1	87710708	1	SIEVE, Upper 1-1/8 Closz
2	87711031	2	ANGLE, Chaffer Seal, Left Hand
3	87711033	2	ANGLE, Chaffer Seal, Right Hand
4	87732448	1	CANVAS, Chaffer
5	245361C2	2	TRANSMITTER, Grain Scan Chaffer Sensor Assembly
6	87698763	11	BOLT,
7	378243	1	WASHER, M8,
8	87681210	11	NUT, Hex, M8, Cl 10,
9	86590413	6	CLAMP,
10	445395	4	RIVET, Pop, M4.8 x 18.1,
11	87489861	1	HARNESS, WIRE, Sieve
12	86566989	9	STRAP, CABLE, M4.75 x 190.5 L,
13	120001A1	1	DEFLECTOR, Sieve, Upper Peterson
14	495-31022	6	WASHER, #10, Sieve, Upper Peterson
15	281-5458	6	SCREW, SELF TAPPING, Hex Wash Hd, #10 x 1/2", Sieve, Upper Peterson
16	374891	1	BOLT, CARRIAGE, Short NK, M6 x 25, Cl8.8, Full Thd,
17	86512439	2	BOLT, CARRIAGE, Short NK, M6 x 16, Cl8.8, Full Thd,
18	87301498	3	NUT,

PDF created with pdfFactory trial version www.pdffactory.com

09B-28 SIEVE ASSEMBLY, UPPER, REMOTE

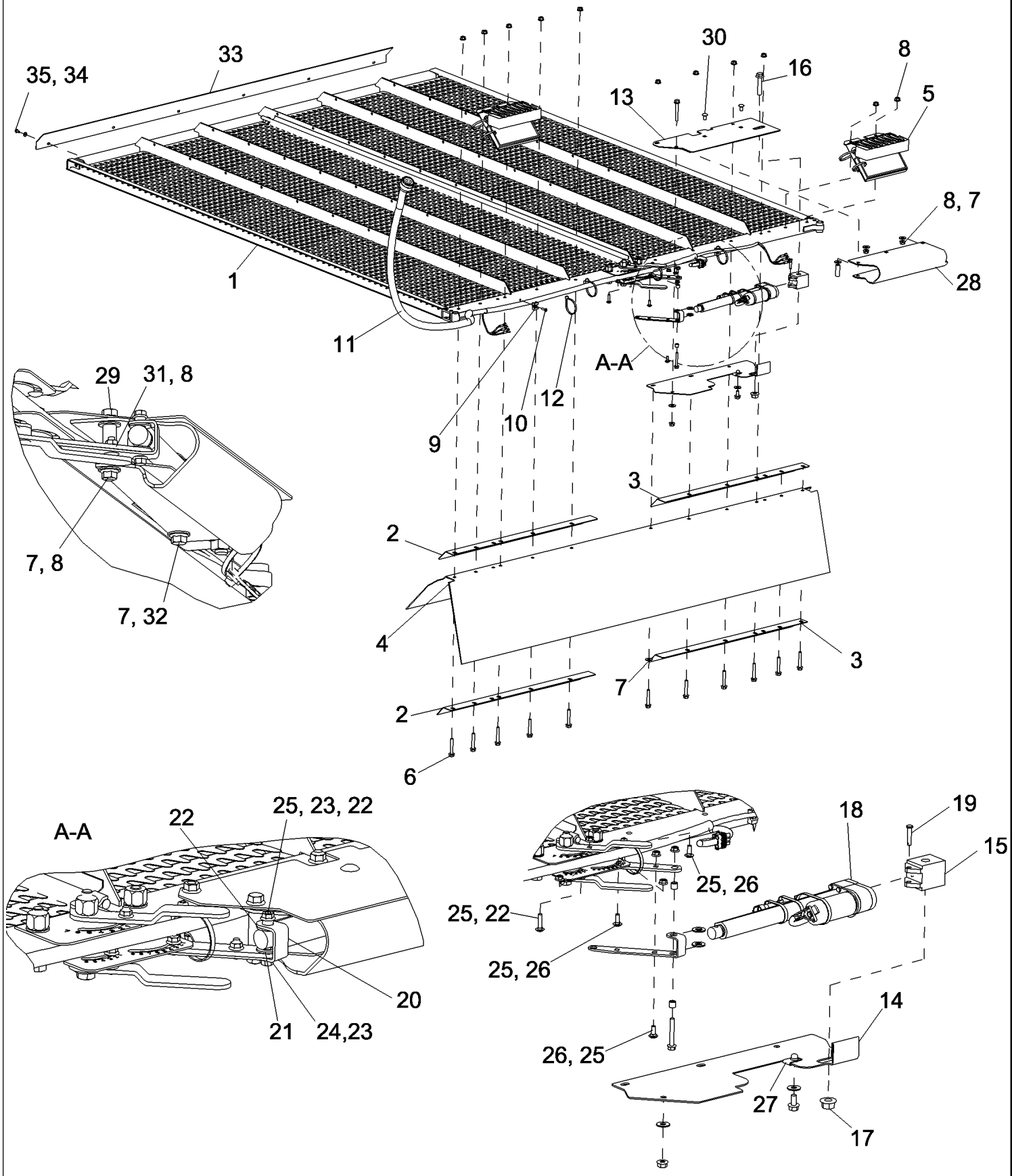

PDF created with pdfFactory trial version www.pdffactory.com

7088 AXIAL-FLOW COMBINE (EU) (4/08-)

09B-28 SIEVE ASSEMBLY, UPPER, REMOTE

ссылка	Номер детали	Кол-во	Описание
1	87710708	1	SIEVE, Upper 1-1/8 Closz
1	87710707	1	SIEVE, Upper Peterson
2	87711031	2	ANGLE, Upper Sieve Seal, Left Hand
3	87711033	2	ANGLE, Upper Sieve Seal, Right Hand
4	87732448	1	CANVAS, Upper Sieve
5	245361C2	2	TRANSMITTER, Grain Scan Chaffer Sensor Assembly
6	87698763	11	BOLT,
7	378243	6	WASHER, M8,
8	87681210	14	NUT, Hex, M8, Cl 10,
9	86590413	6	CLAMP,
10	445395	4	RIVET, Pop, M4.8 x 18.1,
11	87675727	1	HARNESS, WIRE, Sieve
12	86566989	11	STRAP, CABLE, M4.75 x 190.5 L,
13	87705848	1	SHIELD, Actuator Mounting Top
14	87705850	1	SHIELD, Actuator Mounting Bottom
15	87705852	1	BLOCK, Actuator Sieve
16	87301277	1	BOLT,
17	86512497	1	NUT, M12 x 1.75, Flg, Cl 10,
18	87347281	1	ACTUATOR,
19	376876	1	PIN, CLEVIS, M6 x 30,
20	87705855	1	STRAP, Sieve Actuator
21	495-11041	1	WASHER, 3/8", SAE,
22	86624144	2	WASHER, 13/32" x 3/4" x .120",
23	87682401	2	SPACER,
24	844-6045	1	BOLT, Hex Flg, M6 x 45, 8.8,
25	87301498	2	NUT,
26	87695418	1	BOLT,
27	86508354	1	NUT,
28	87705853	1	COVER, Actuator Sieve
29	87670761	1	BOLT,
30	87020310	2	BOLT, Short NK, M8 x 16, Cl 10.9, Full Thd,
31	87698776	1	SPACER,
32	87681207	1	BOLT,
33	120001A1	1	DEFLECTOR, Upper Peterson
34	495-31022	6	WASHER, #10, Upper Peterson
35	281-5458	6	SCREW, SELF TAPPING, Hex Wash Hd, #10 x 1/2", Upper Peterson

PDF created with pdfFactory trial version www.pdffactory.com

09B-29 SIEVE ASSEMBLY, LOWER, MANUAL

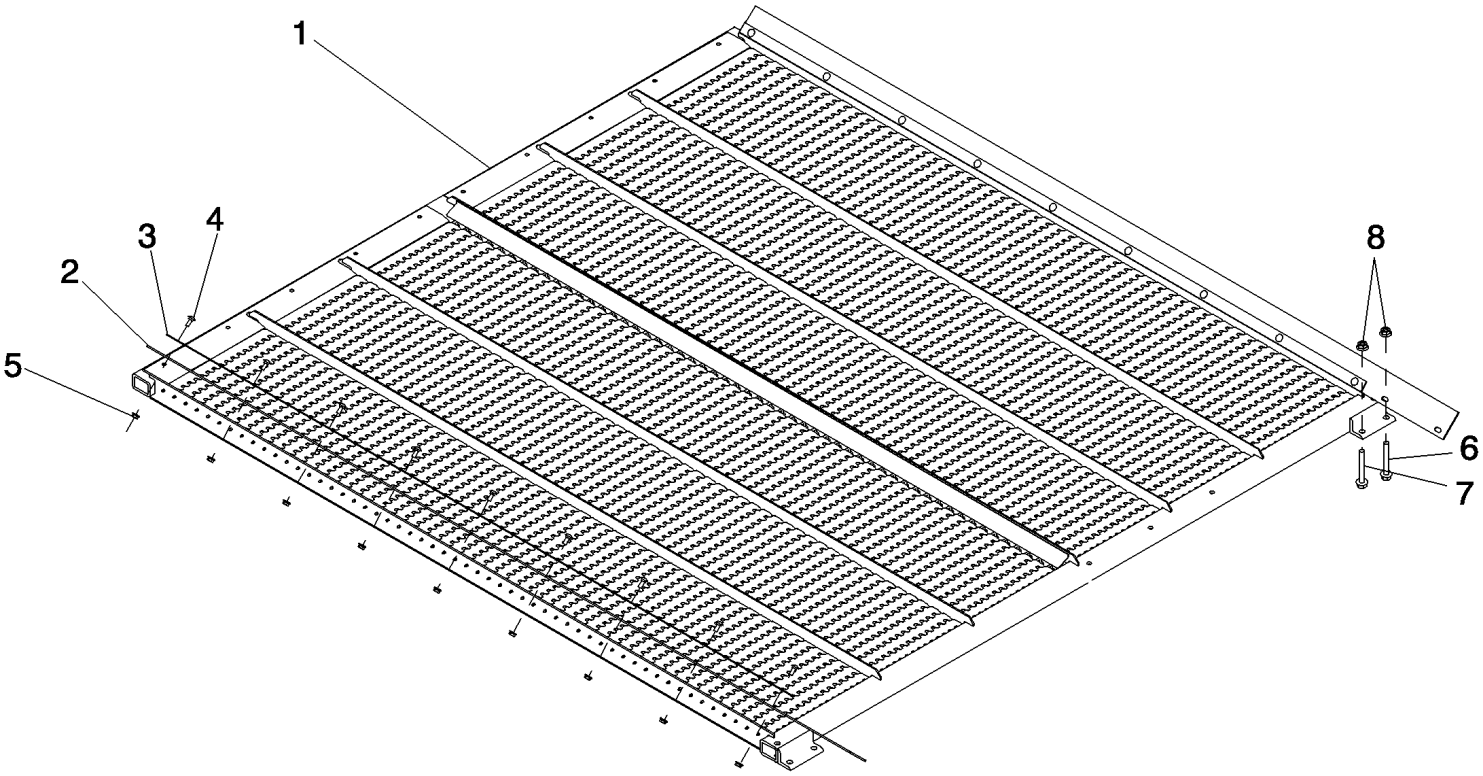

PDF created with pdfFactory trial version www.pdffactory.com

7088 AXIAL-FLOW COMBINE (EU) (4/08-)

09B-29 SIEVE ASSEMBLY, LOWER, MANUAL

ссылка	Номер детали	Кол-во	Описание
1	87712275	1	SIEVE, Lower 1-1/8 Closz
1	87712276	1	SIEVE, Lower 1-5/8 Closz
3	87712566	2	BAR, Shoe Sieve
2	198925A1	2	SEAL, Shoe Sieve
4	86512439	18	BOLT, CARRIAGE, Short NK, M6 x 16, Cl8.8, Full Thd,
5	86050300	18	NUT, M6 x 1, Flg, Cl10,
6	827-10120	2	BOLT, Hex, M10 x 120, 10.9,
7	827-10140	2	BOLT, Hex, M10 x 140, 10.9,
8	86512554	4	NUT, LOCK, M10 x 1.5, Cl 10,

PDF created with pdfFactory trial version www.pdffactory.com

09B-30 SIEVE ASSEMBLY, LOWER, REMOTE

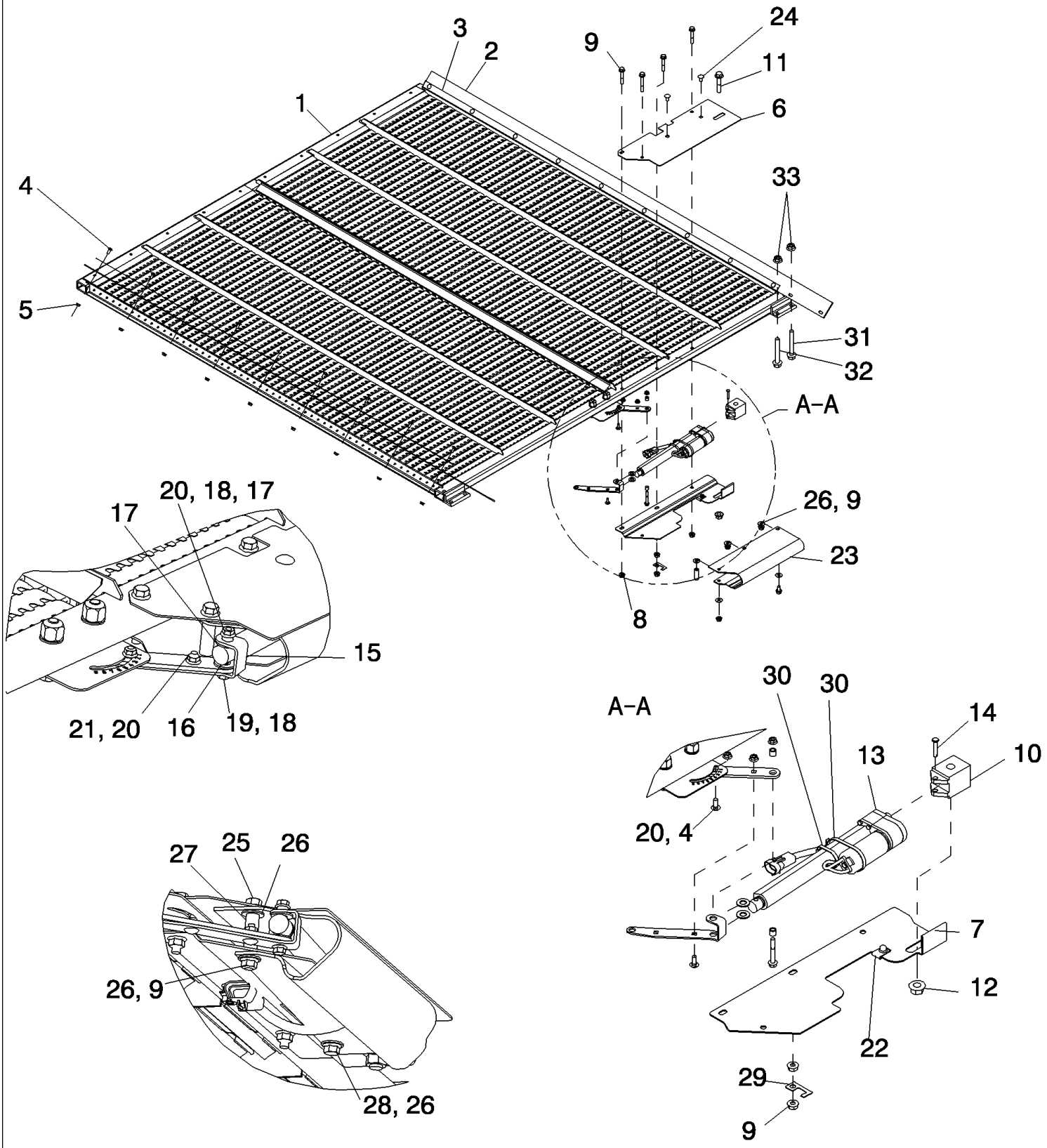

PDF created with pdfFactory trial version www.pdffactory.com

7088 AXIAL-FLOW COMBINE (EU) (4/08-)

09B-30 SIEVE ASSEMBLY, LOWER, REMOTE

ссылка	Номер детали	Кол-во	Описание
1	87712275	1	SIEVE, Lower, 1-1/8 Closz
1	87712276	1	SIEVE, Lower 1-5/8 Closz
3	87712566	2	BAR, Lower Sieve
2	198925A1	2	SEAL, Shoe Sieve
4	86512439	18	BOLT, CARRIAGE, Short NK, M6 x 16, Cl8.8, Full Thd,
5	86050300	18	NUT, M6 x 1, Flg, Cl10,
6	87705848	1	SHIELD, Actuator Mounting Top
7	87705850	1	SHIELD, Actuator Mounting Bottom
8	87698763	3	BOLT,
9	87681210	7	NUT, Hex, M8, Cl 10,
10	87705852	1	BLOCK, Actuator Sieve
11	87301277	1	BOLT,
12	86512497	1	NUT, M12 x 1.75, Flg, Cl 10,
13	87347281	1	ACTUATOR,
14	376876	1	PIN, CLEVIS, M6 x 30,
15	87705855	1	STRAP, Sieve Actuator
16	495-11041	1	WASHER, 3/8", SAE,
17	86624144	2	WASHER, 13/32" x 3/4" x .120",
18	87682401	2	SPACER,
19	844-6045	1	BOLT, Hex Flg, M6 x 45, 8.8,
20	87301498	2	NUT,
21	87695418	1	BOLT,
22	86508354	1	NUT,
23	87705853	1	COVER, Actuator Sieve
24	87020310	1	BOLT, Short NK, M8 x 16, Cl 10.9, Full Thd,
25	87670761	2	BOLT,
26	378243	5	WASHER, M8,
27	87698776	1	SPACER,
28	87681207	1	BOLT,
29	87013667	1	CLIP,
30	86566989	2	STRAP, CABLE, M4.75 x 190.5 L,
31	827-10120	2	BOLT, Hex, M10 x 120, 10.9,
32	827-10140	2	BOLT, Hex, M10 x 140, 10.9,
33	86512554	4	NUT, LOCK, M10 x 1.5, Cl 10,

PDF created with pdfFactory trial version www.pdffactory.com

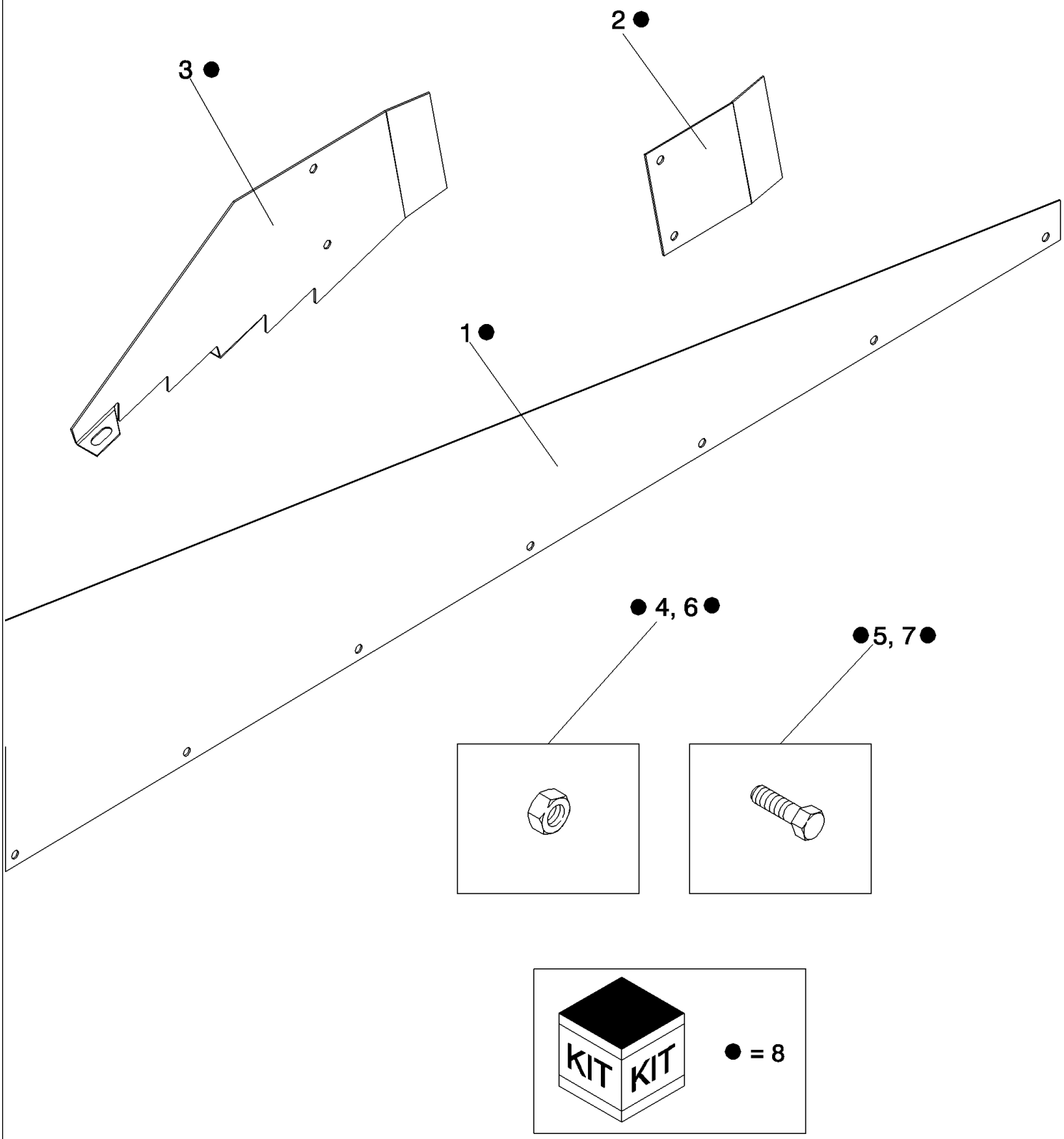

PDF created with pdfFactory trial version www.pdffactory.com

7088 AXIAL-FLOW COMBINE (EU) (4/08-)

09B-31 TALL HILL SIDE DIVIDER ATTACHMENT

ссылка	Номер детали	Кол-во	Описание
1	185114C1	5	DIVIDER, Chaffer, Sieve
2	185116C1	5	RETAINER, Support, Chaffer Divider
3	87584221	5	DIVIDER, Chaffer Front Pan
4	86507066	10	NUT, M8 x 1.25, Flg, Cl 10,
5	87656137	10	BOLT, Hex Flg, M8 x 20, 10.9, Full Thd,
6	86050300	55	NUT, M6 x 1, Flg, Cl10,
7	87695418	55	BOLT,
8	87720383	1	DIA KIT, HARVESTER, Tall Hill Side Divider, Inc. 1-7

PDF created with pdfFactory trial version www.pdffactory.com

7088 AXIAL-FLOW COMBINE (EU) (4/08-)

09B-31A SHORT HILL SIDE DIVIDERS

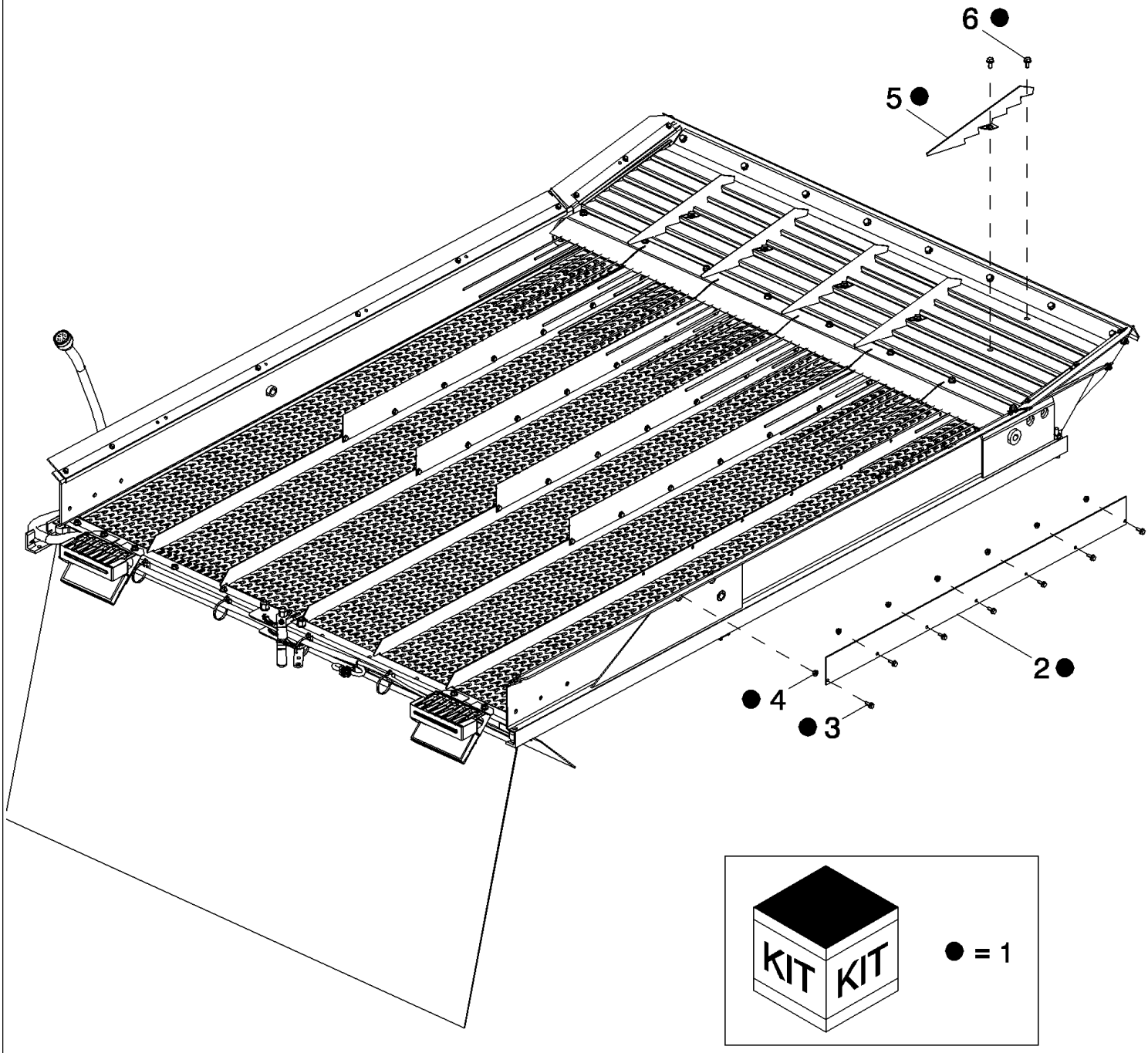

PDF created with pdfFactory trial version www.pdffactory.com

7088 AXIAL-FLOW COMBINE (EU) (4/08-)

09B-31A SHORT HILL SIDE DIVIDERS

ссылка	Номер детали	Кол-во	Описание
1	84167899	1	KIT, SERVICE, DIA, Side Hill Dividers, Inc. 2 - 6
2	1957596C2	5	DIVIDER, Chaffer Sieve
3	87695418	35	BOLT,
4	86050300	35	NUT, M6 x 1, Flg, Cl10,
5	87546880	5	DIVIDER, Grain Pan
6	87681207	10	BOLT,

PDF created with pdfFactory trial version www.pdffactory.com

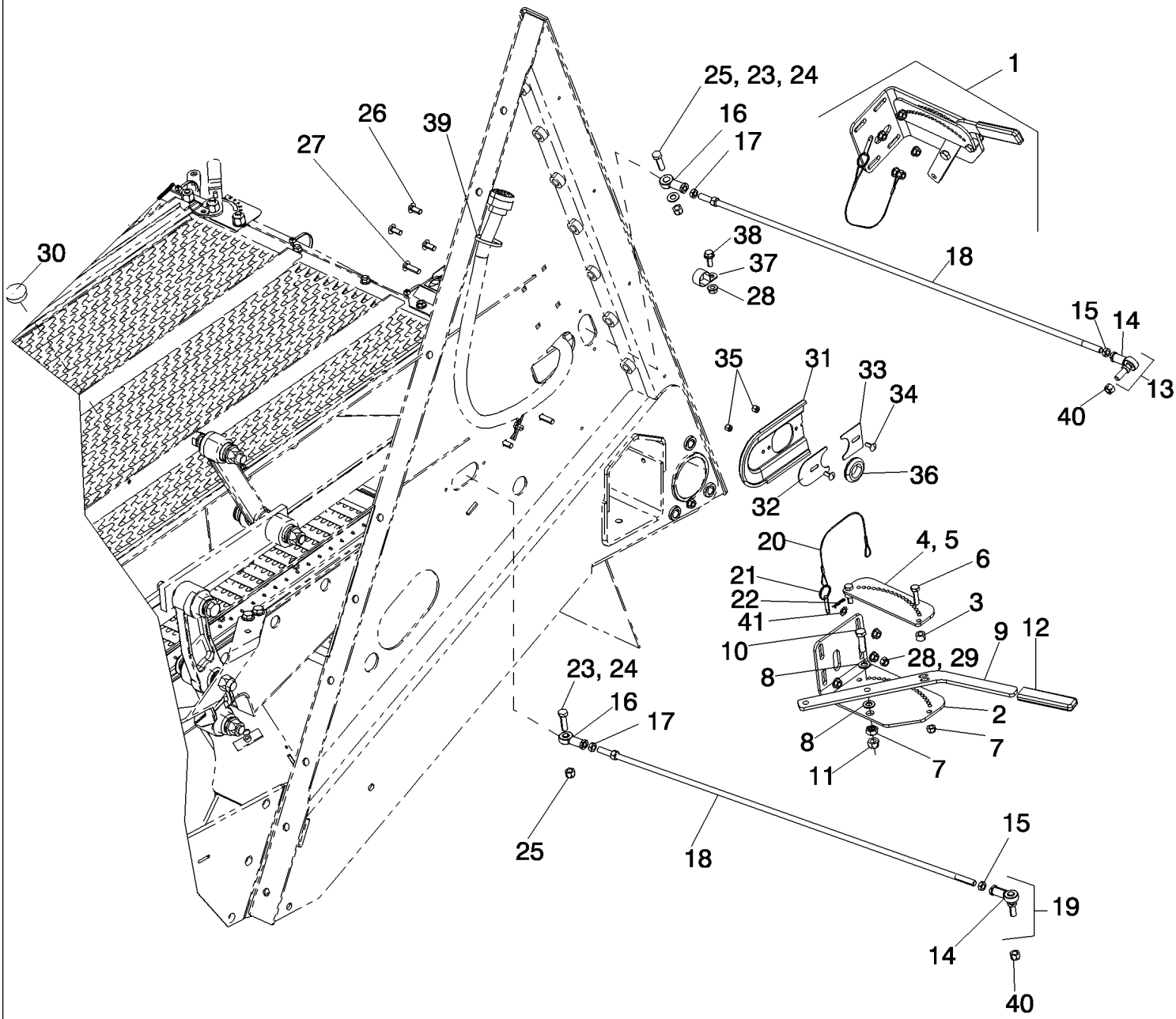

PDF created with pdfFactory trial version www.pdffactory.com

7088 AXIAL-FLOW COMBINE (EU) (4/08-)

09B-32 SIEVE ADJUSTMENT

ссылка	Номер детали	Кол-во	Описание
1	87605671	2	Adjustment Assembly, Inc. 2 - 12
2	87605670	1	BRACKET, Sieve Adjust
3	416491A2	2	SPACER, Tube
4	399763A2	1	PLATE, Indicator, Sieve Location
5	87571576	1	DECAL, Sieve Adjustment
6	43128	2	BOLT, Hex, M8 x 30, 8.8,
7	86629542	2	NUT, LOCK, M8 x 1.25, Cl 8,
8	895-11010	2	WASHER, M10 x 20 x 2,
9	399778A2	1	HANDLE, Sieve Adjustment
10	9706704	1	BOLT, Hex, M10 x 35, 8.8, Full Thd,
11	100037	1	NUT, M10 x 1.5, Cl 8,
12	433741A1	1	GRIP, Sieve Adjust
13	442374A1	1	Chaffer Sieve Adjust, Inc. 14 - 18
14	403123A1	1	ROD,
15	129-289	1	NUT, Jam, 3/8"-24, G5, LH,
16	427179A1	1	ROD,
17	425-156	1	NUT, Jam, 3/8"-24, G5,
18	407139A2	1	ROD, ADJUSTMENT, Chaffer Sieve
18	407140A2	1	ROD, ADJUSTMENT, Shoe Sieve
19	84129225	1	Lower Sieve Adjust, Inc. 14 - 18
20	427336A1	2	CABLE,
21	87453256	2	PIN, Quick Release
22	136-154	2	PIN, SPLIT (COTTER), Int, 7/64" x .072",
23	495-11041	2	WASHER, 3/8", SAE,
24	413-620	2	BOLT, Hex, 3/8"-16 x 1 1/4", G5, Full Thd,
25	9637692	2	NUT, LOCK, 3/8"-16, GB,
26	87682383	6	BOLT,
27	87682385	2	BOLT,
28	86507066	9	NUT, M8 x 1.25, Flg, Cl 10,
29	86629542	2	NUT, LOCK, M8 x 1.25, Cl 8,
30	353-414	1	PLUG, Dome, 1.375" hole, Nylon,
31	84127513	1	SEAL, COMPOSITE, Cleaning System
32	87495389	1	COVER ASSY,
33	84127574	1	PLATE,
34	86512439	2	BOLT, CARRIAGE, Short NK, M6 x 16, Cl8.8, Full Thd,
35	832-10406	2	NUT, LOCK, M6 x 1, Cl 8,
36	248-1123	1	GROMMET, 1" ID x 1 3/4" x .062",
37	86637977	1	CLAMP, 1", Insul, 5/16" Bolt,
38	87656137	1	BOLT, Hex Flg, M8 x 20, 10.9, Full Thd,
39	86566989	1	STRAP, CABLE, M4.75 x 190.5 L,
40	80855	2	NUT, LOCK, 3/8"-24, GC,

PDF created with pdfFactory trial version www.pdffactory.com

ссылка	Номер детали	Кол-во	Описание
41	131-440	8	NUT,

PDF created with pdfFactory trial version www.pdffactory.com

09B-33 KIT, DIA, REMOTE SIEVE COMPLETING

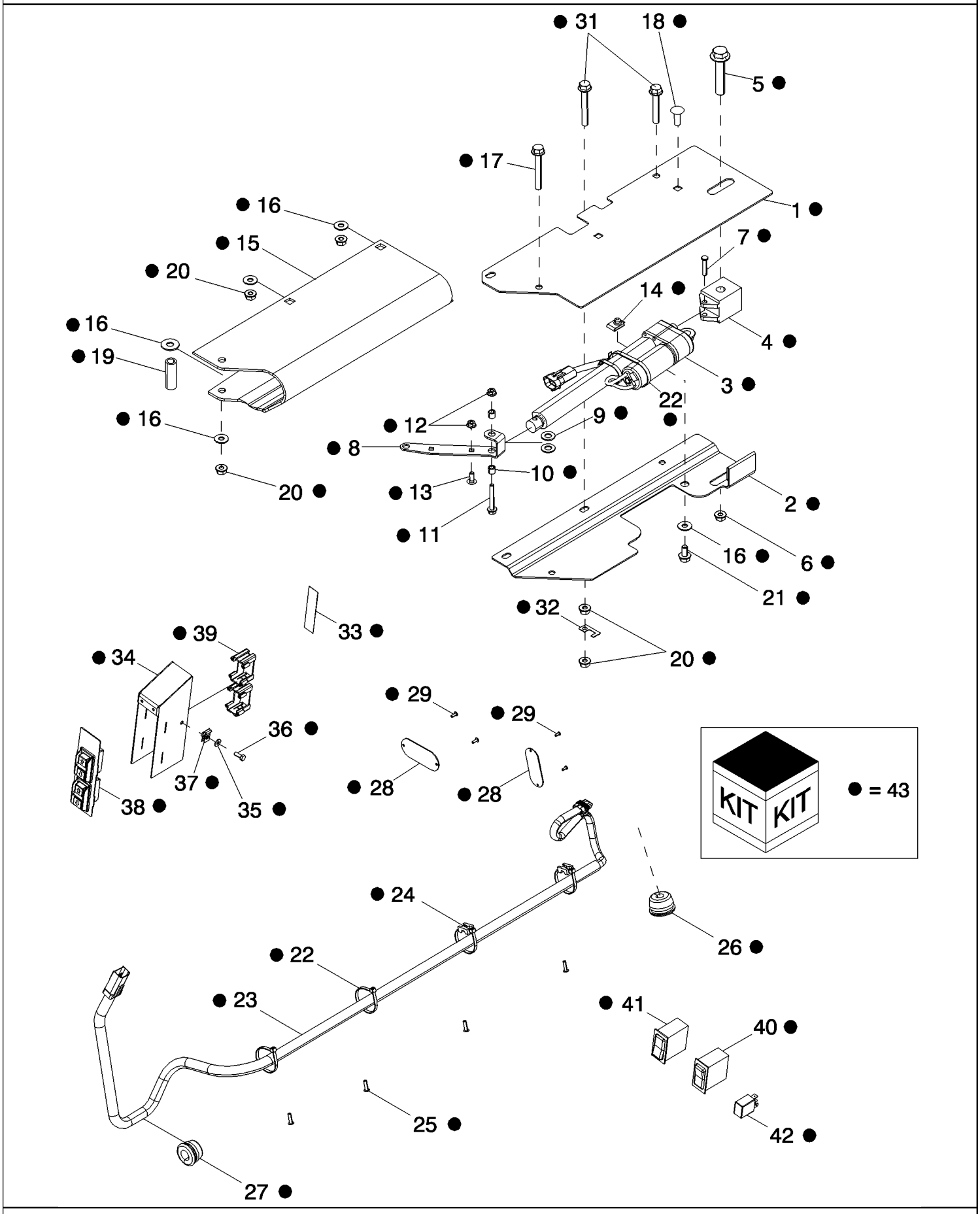

PDF created with pdfFactory trial version www.pdffactory.com

7088 AXIAL-FLOW COMBINE (EU) (4/08-)

09B-33 KIT, DIA, REMOTE SIEVE COMPLETING

ссылка	Номер детали	Кол-во	Описание
1	84130561	2	SHIELD, Actuator Mounting Top
2	84130550	2	SHIELD, Actuator Mounting Bottom
3	87347281	2	ACTUATOR,
4	87705852	2	BLOCK, Actuator Sieve
5	87301277	2	BOLT,
6	86512497	2	NUT, M12 x 1.75, Flg, Cl 10,
7	376876	2	PIN, CLEVIS, M6 x 30,
8	87705855	2	STRAP, Sieve Actuator
9	495-11041	4	WASHER, 3/8", SAE,
10	87682401	4	SPACER,
11	844-6045	2	BOLT, Hex Flg, M6 x 45, 8.8,
12	87301498	4	NUT,
13	86512439	2	BOLT, CARRIAGE, Short NK, M6 x 16, Cl8.8, Full Thd,
14	86508354	2	NUT,
15	87705853	2	COVER, Actuator Sieve
16	378243	10	WASHER, M8,
17	87670761	2	BOLT,
18	87020310	11	BOLT, Short NK, M8 x 16, Cl 10.9, Full Thd,
19	87698776	2	SPACER,
20	87681210	10	NUT, Hex, M8, Cl 10,
21	87681207	2	BOLT,
22	86566989	10	STRAP, CABLE, M4.75 x 190.5 L,
23	87580679	1	HARNESS, WIRE, Shoe Sieve Control
24	86590413	4	CLAMP,
25	445395	4	RIVET, Pop, M4.8 x 18.1,
26	198824C1	1	GROMMET,
27	86976974	1	GROMMET,
28	87389797	2	COVER,
29	445394	4	RIVET, Pop, M4.8 x 12.7,
30	86507066	7	NUT, M8 x 1.25, Flg, Cl 10,
31	87698763	3	BOLT,
32	87013667	1	CLIP,
33	87036589	1	DECAL, Remote Adjustment Switch
34	87011997	1	HOUSING,
35	322357	2	WASHER, SPRING, Belleville, M6,
36	86508568	2	SCREW, Hex, M6 x 16, 8.8,
37	86014250	2	NUT, U, M6 x 1,
38	86627351	2	SWITCH, Remote Adjustment
39	86627352	2	CLAMP, Switch
40	87388153	1	SWITCH, Upper Sieve Adjustment
41	87388156	1	SWITCH, Upper Sieve Adjustment

PDF created with pdfFactory trial version www.pdffactory.com

ссылка	Номер детали	Кол-во	Описание
42	87414866	1	RELAY,
43	84161577	1	PACKAGE,SERVICE, DIA, Remote Sieve Completing, Inc. 1-42

PDF created with pdfFactory trial version www.pdffactory.com

09C-01 BEATER, DISCHARGE

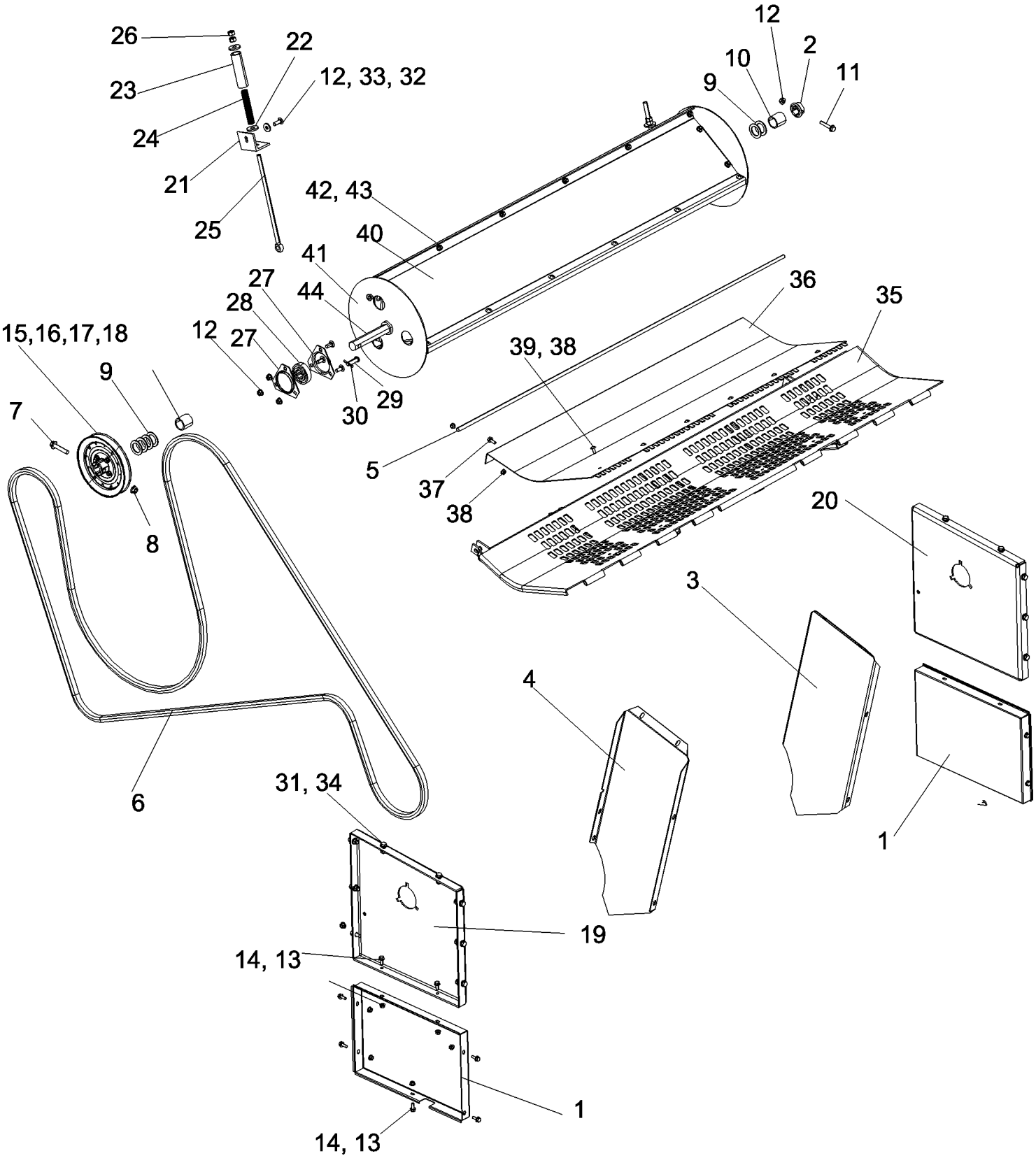

PDF created with pdfFactory trial version www.pdffactory.com

7088 AXIAL-FLOW COMBINE (EU) (4/08-)

09C-01 BEATER, DISCHARGE

ссылка	Номер детали	Кол-во	Описание
1	87753814	2	SHEET, Chopper Beater Filler
2	117051A1	1	HUB, Beater Fixed
3	182948C2	1	DEFLECTOR, Discharge, Left Hand
4	182949C2	1	DEFLECTOR, Discharge, Right Hand
5	182980C1	1	ROD, Hinge
6	186509C2	1	BELT, Cleaning System Drive With Beater
7	87301277	1	BOLT,
8	87681209	1	NUT,
9	495-81211	6	WASHER, 1 11/32" x 2" x .120",
10	632147R1	1	SPACER, Auger Drive
11	87698840	1	BOLT,
12	87547587	9	NUT,
13	87656137	14	BOLT, Hex Flg, M8 x 20, 10.9, Full Thd,
14	86507066	14	NUT, M8 x 1.25, Flg, Cl 10,
15	87752814	1	PULLEY, Beater
16	1319402C1	1	HUB, Beater
17	87698833	4	BOLT,
18	87681210	4	NUT, Hex, M8, Cl 10,
19	87752640	1	SUPPORT ASSY., Beater, Left Hand
20	87752641	1	SUPPORT ASSY., Beater, Right Hand
21	182896C2	2	SUPPORT, Beater Bottom
22	495-81162	4	WASHER, 17/32" x 1 1/2" x .179",
23	182981C1	2	SPACER, Spreader Drive
24	391745R1	2	SPRING, Spreader Drive
25	182892C2	2	BOLT, Tension
26	425-108	4	NUT, 1/2"-13, G5,
27	86620026	4	FLANGE,
28	87376564	2	BEARING, Shaker Shaft
29	439-1828	2	PIN, HEADED, 1/2" x 1 3/4",
30	432-1216	2	PIN, SPLIT (COTTER), 3/16" x 1",
31	87698836	16	BOLT,
32	87698837	2	BOLT,
33	496-41041	2	WASHER, 13/32" x 1 1/8" x .134",
34	86050279	16	NUT, M10 x 1.5, Flg, Cl 10,
35	87746097	1	CONCAVE, Spring Loaded Beater
36	87746099	1	COVER, Spring Loaded Beater
37	87656137	6	BOLT, Hex Flg, M8 x 20, 10.9, Full Thd,
38	825-5148	12	NUT, M8, Flg Ser,
39	847-3820	6	SCREW, Sltd Tr Hd, M8 x 20, 10.9, Serr,
40	1319270C1	3	BLADE, Beater
41	1319266C1	2	HUB, Beater

PDF created with pdfFactory trial version www.pdffactory.com

ссылка	Номер детали	Кол-во	Описание
42	87573369	30	SCREW,
43	86050279	30	NUT, M10 x 1.5, Flg, Cl 10,
44	1302176C2	1	SHAFT,

PDF created with pdfFactory trial version www.pdffactory.com

09C-02 HOUSING, CLEANING FAN ASSEMBLY

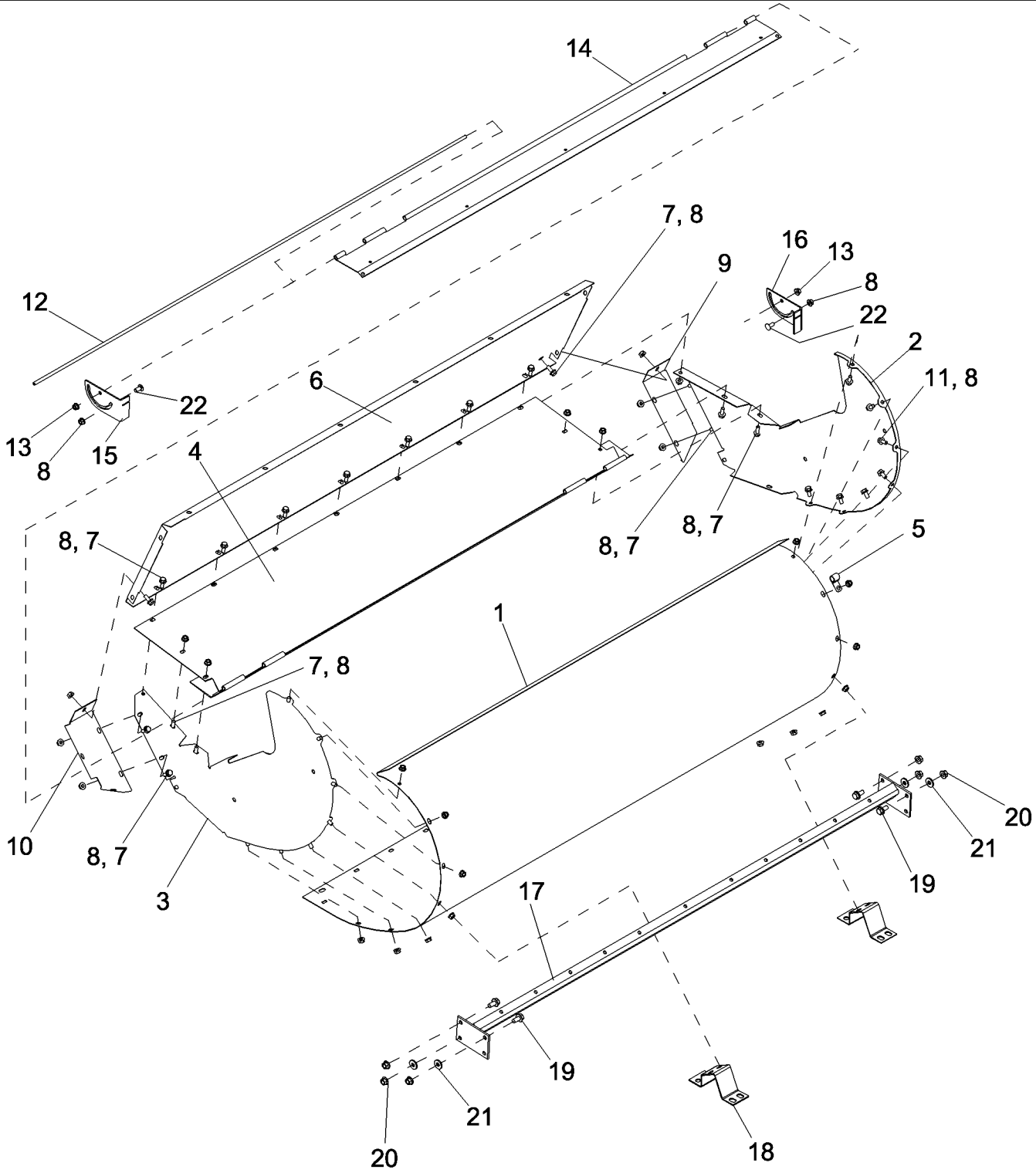

PDF created with pdfFactory trial version www.pdffactory.com

7088 AXIAL-FLOW COMBINE (EU) (4/08-)

09C-02 HOUSING, CLEANING FAN ASSEMBLY

ссылка	Номер детали	Кол-во	Описание
1	1347466C1	1	HOUSING, Fan Scroll
2	1347012C2	1	PLATE, Fan, Left Hand, End
3	1347013C2	1	PLATE, Fan, Right Hand, End
4	1541547C1	1	PLATE, Fan Top
5	516-23127	1	CLAMP, J, 9/16" Insul, 3/8" Bolt,
6	1989340C1	1	PLATE, Fan To Auger Trough
7	87656137	17	BOLT, Hex Flg, M8 x 20, 10.9, Full Thd,
8	86507066	33	NUT, M8 x 1.25, Flg, Cl 10,
9	1541928C1	1	SUPPORT, Filler, Left Hand
10	1541929C1	1	SUPPORT, Filler, Right Hand
11	87681207	14	BOLT,
12	185197C1	1	ROD, Cleaning System
13	87681210	2	NUT, Hex, M8, Cl 10,
14	87471844	1	DOOR, Cutoff Fan
15	1989694C2	1	PLATE, Fan Cutoff, Right Hand
16	1989693C2	1	PLATE, Fan Cutoff, Left Hand
17	191928C1	1	SUPPORT, Fan Rear
18	1541543C1	2	BRACKET, Fan Housing
19	87698835	6	BOLT,
20	86050279	6	NUT, M10 x 1.5, Flg, Cl 10,
21	495-81135	4	WASHER, 13/32" x 1" x .120",
22	87682383	2	BOLT,

PDF created with pdfFactory trial version www.pdffactory.com

09C-03 FAN ASSEMBLY, CLEANING SYSTEM

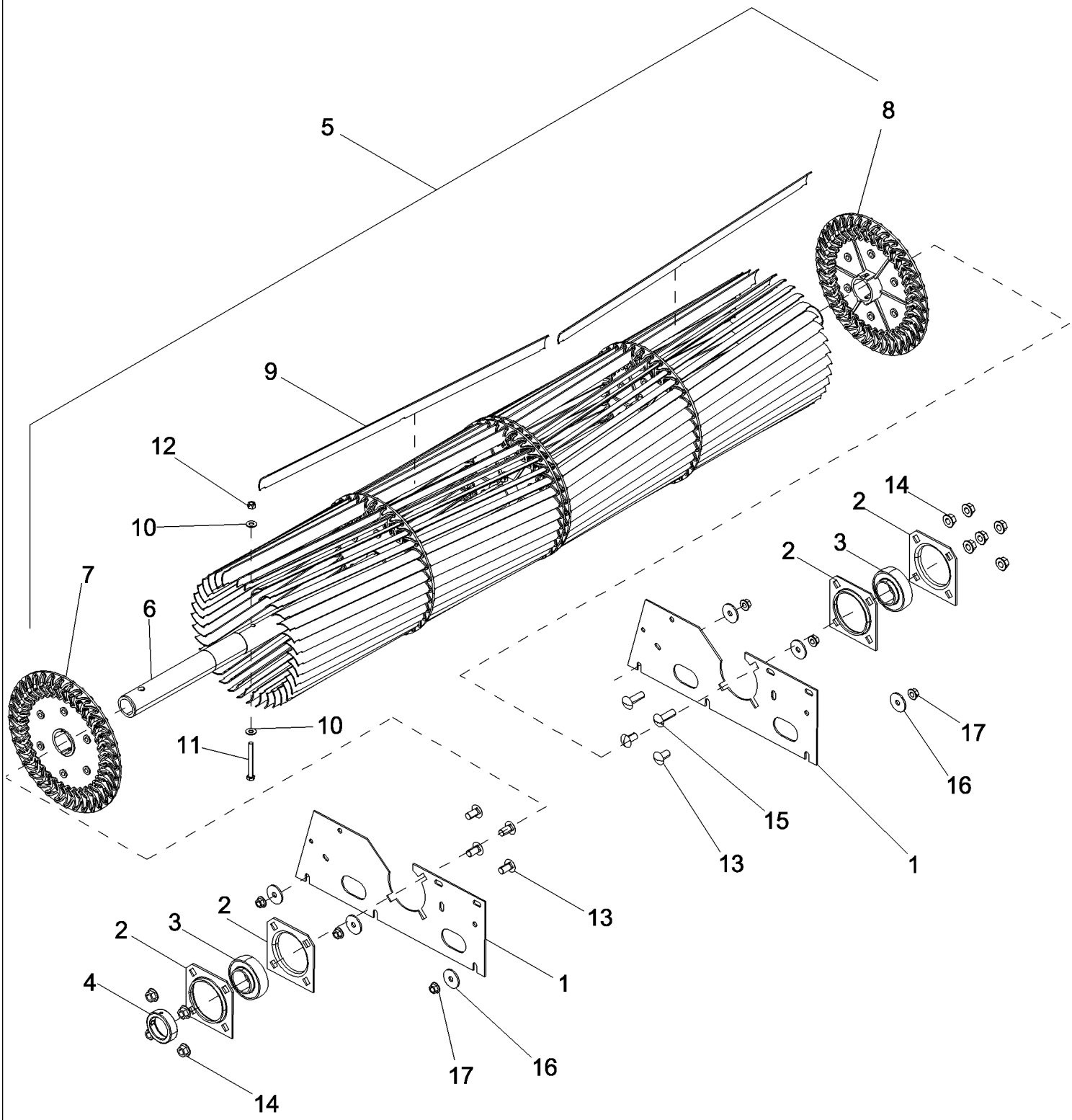

PDF created with pdfFactory trial version www.pdffactory.com

7088 AXIAL-FLOW COMBINE (EU) (4/08-)

09C-03 FAN ASSEMBLY, CLEANING SYSTEM

ссылка	Номер детали	Кол-во	Описание
1	87735825	2	SUPPORT, Fan Bearing
2	716840	4	FLANGE, Bearing
3	668719R92	2	BEARING, BALL,
4	86999734	1	COLLAR, Lock
5	1541936C3	1	FAN, Cleaning, Inc. 6 - 12
6	1989543C3	1	SHAFT, Cleaning Fan
7	1541570C1	3	DISC, Fan, Right Hand
8	1541560C1	3	DISC, Fan, Left Hand
9	1347001C1	72	PADDLE, Crossflow Fan
10	86625263	12	WASHER, M8 x 20 x 1.6,
11	331175	6	BOLT, Hex, M8 x 75, 8.8,
12	86629542	6	NUT, LOCK, M8 x 1.25, Cl 8,
13	9503839	6	BOLT, CARRIAGE,
14	86512497	10	NUT, M12 x 1.75, Flg, Cl 10,
15	87698852	2	SCREW,
16	495-81143	6	WASHER, 13/32" x 1 1/2" x .120",
17	86050279	6	NUT, M10 x 1.5, Flg, Cl 10,

PDF created with pdfFactory trial version www.pdffactory.com

09C-04 DRIVE ASSEMBLY, CLEANING FAN JACKSHAFT

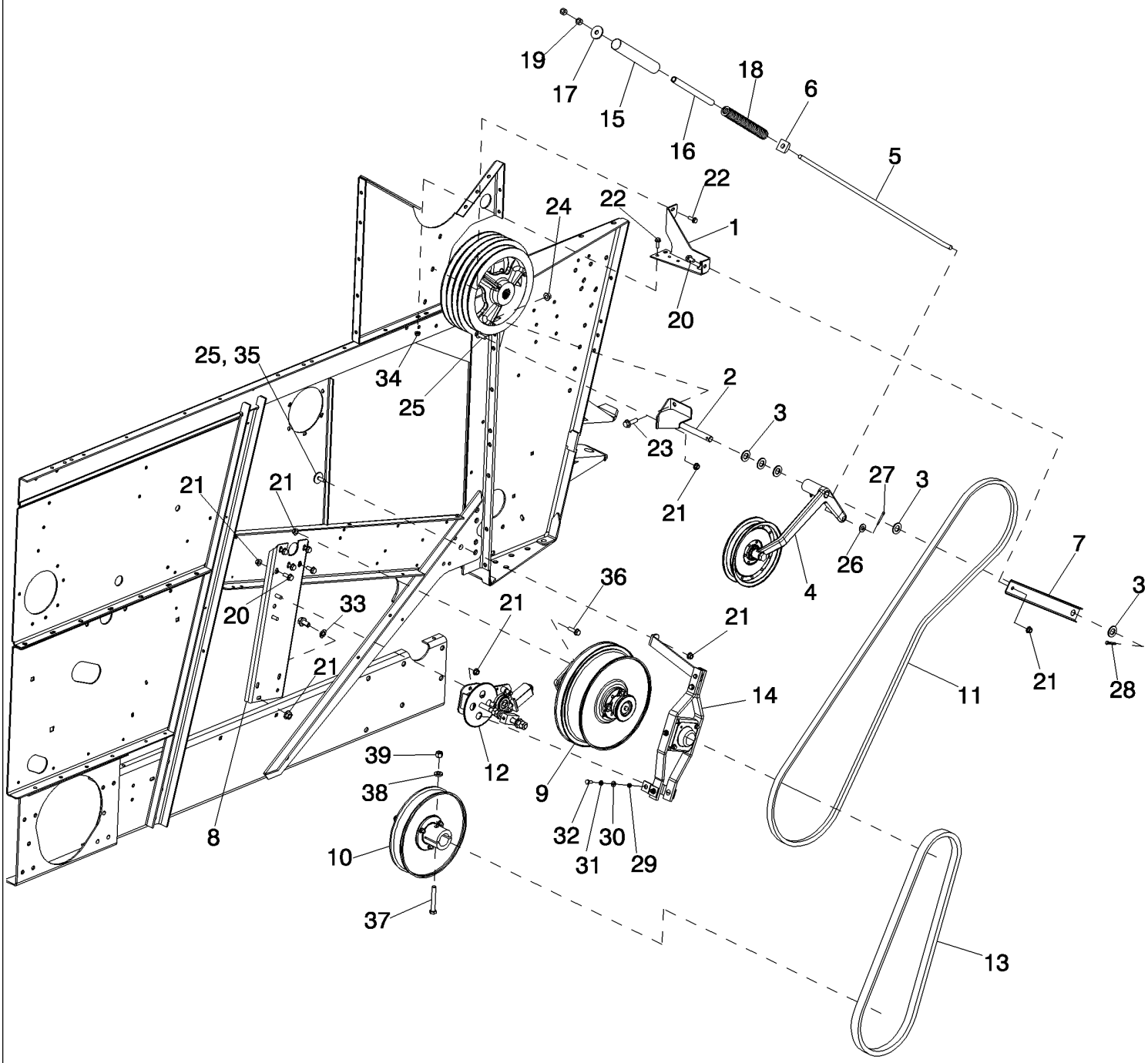

PDF created with pdfFactory trial version www.pdffactory.com

7088 AXIAL-FLOW COMBINE (EU) (4/08-)

09C-04 DRIVE ASSEMBLY, CLEANING FAN JACKSHAFT

ссылка	Номер детали	Кол-во	Описание
1	87643045	1	SUPPORT ASSY., Idler Arm Spring
2	87703325	1	SUPPORT ASSY., Clean Fan Idler Pivot
3	495-11081	6	WASHER, 3/4", SAE,
4	NSS	1	NOT SERVICED SEPARATELY, IDLER ASSEMBLY, Fan Drive With Pulley, See Figure 09C-05
5	174520C2	1	ROD, Fan Jackshaft Belt Tensioner
6	194652C1	1	PIVOT, Primary Door
7	87643047	1	CHANNEL, Outer Pivot Support
8	87647069	1	PLATE ASSY., Fan Drive Support
9	NSS	1	NOT SERVICED SEPARATELY, JACKSHAFT ASSEMBLY, Cleaning Fan Drive, See Figure 09C-05
10	NSS	1	NOT SERVICED SEPARATELY, PULLEY ASSEMBLY, Cleaning Fan, See Figure 09C-05
11	87642957	1	BELT, Fan Jackshaft Drive
12	NSS	1	NOT SERVICED SEPARATELY, MOTOR ASSEMBLY, Cleaning Fan Speed Adjust, See Figure 09C-06
13	301146A1	1	BELT, Fan Drive
14	NSS	1	NOT SERVICED SEPARATELY, CONTROL ASSEMBLY, Cleaning Fan Speed, See Figure 09C-07
15	87703617	1	SPACER, Fan Jackshaft Idler Spring
16	84122810	1	SPACER, Fan Jackshaft Spring
17	9511052	1	WASHER, M12 x 44 x 4,
18	450555A1	1	SPRING, Feeder Belt
19	425-108	2	NUT, 1/2"-13, G5,
20	87698835	9	BOLT,
21	86050279	15	NUT, M10 x 1.5, Flg, Cl 10,
22	87698833	3	BOLT,
23	87695413	2	BOLT,
24	86512497	2	NUT, M12 x 1.75, Flg, Cl 10,
25	87698837	2	BOLT,
26	495-11053	1	WASHER, 1/2", SAE,
27	432-1220	1	PIN, SPLIT (COTTER), 3/16" x 1 1/4",
28	432-1620	1	PIN, SPLIT (COTTER), 1/4" x 1 1/4",
29	183916A1	2	SPACER,
30	495-11034	2	WASHER, 5/16", SAE,
31	492-11031	2	WASHER, LOCK, 5/16",
32	413-512	2	BOLT, Hex, 5/16"-18 x 3/4", G5, Full Thd,
33	131-415	1	NUT, LOCK, Push, Bolt Retainer, 3/8" x 25/32",
34	86507066	2	NUT, M8 x 1.25, Flg, Cl 10,
35	495-81143	1	WASHER, 13/32" x 1 1/2" x .120",
36	87698838	4	BOLT,
37	426-856	1	BOLT, Hex, 1/2"-13 x 3 1/2", G8,

PDF created with pdfFactory trial version www.pdffactory.com

ссылка	Номер детали	Кол-во	Описание
38	496-31053	1	WASHER, 17/32" x 1 1/16" x .188", HDN,
39	232-4118	1	NUT, LOCK, 1/2"-13, GC,

PDF created with pdfFactory trial version www.pdffactory.com

09C-05 PULLEY ASSEMBLY CLEANING FAN, CLEANING FAN DRIVE JACKSHAFT ASSEMBLY, IDLER ASSEMBLY FAN DR

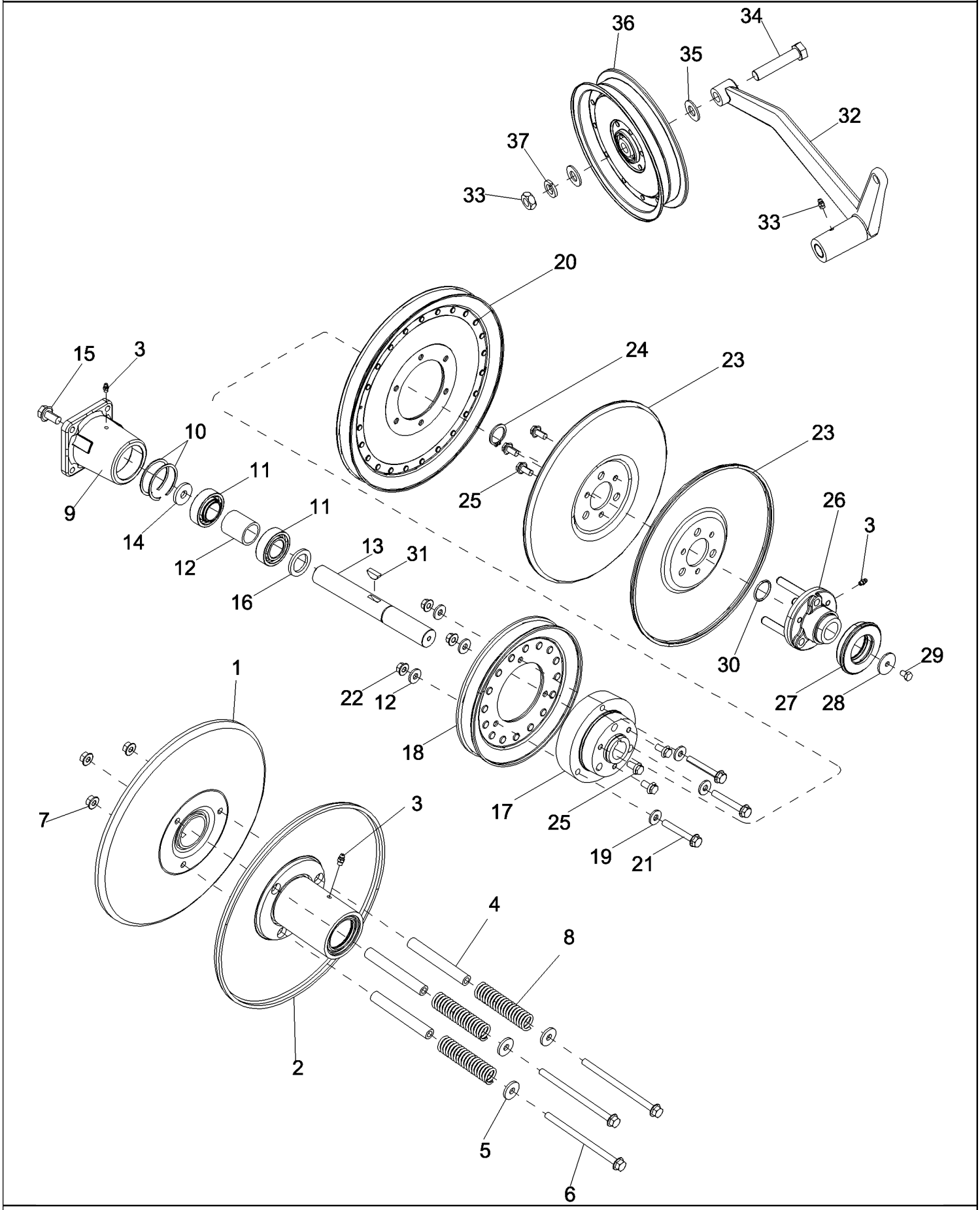

PDF created with pdfFactory trial version www.pdffactory.com

7088 AXIAL-FLOW COMBINE (EU) (4/08-)

09C-05 PULLEY ASSEMBLY CLEANING FAN, CLEANING FAN DRIVE JACKSHAFT ASSEMBLY, IDLER ASSEMBLY FAN DR

ссылка	Номер детали	Кол-во	Описание
1	87522943	1	PULLEY, Fan Driven Fixed
2	1541552C2	1	PULLEY, Fan Driven Adjustable
3	219-87	3	NIPPLE, LUBE, 1/4"-28 x .56" lg, Self-Tap,
4	1302180C2	3	BUSHING, Fan Drive
5	495-81117	3	WASHER, .344" x 1" x .120",
6	87681208	3	NUT,
7	87681210	3	NUT, Hex, M8, Cl 10,
8	1302181C2	3	SPRING, Fan Drive
9	192418C1	1	HUB, Elevator And Fan Drive
10	360936R1	2	RING, Separator Drive Shaft Bearing
11	1302725C91	2	BEARING, BALL, Self-Alligning Adapter
12	152926C1	1	SPACER, Shapping Unit Drive Input Shaft
13	194853C3	1	SHAFT, Elevator And Fan Drive
14	195-81030	1	WASHER,
15	1302143C1	1	BOLT,
16	183274C2	1	WASHER, Fan Bearing Retainer
17	183333C1	1	HUB, Fixed Pulley
18	193948C1	1	PULLEY, Cleaning System Drive
19	495-81135	6	WASHER, 13/32" x 1" x .120",
20	295918A1	1	PULLEY, Fan Jackshaft Driven
21	87698841	3	BOLT,
22	87547587	3	NUT,
23	301141A1	2	PULLEY, Fan Driver
24	100-16125	1	RING, SNAP, #125, Ext,
25	115745A1	6	SCREW,
26	185286C91	1	HUB, Fan Driven Pulley
27	168215C92	1	BEARING, THRUST,
28	495-81122	1	WASHER, .344" x 1 1/2" x .120",
29	413-58	1	BOLT, Hex, 5/16"-18 x 1/2", G5, Full Thd,
30	238-5218	1	O-RING, -218, 70 Duro, 1.234" ID x .139" Thk,
31	126-125	1	KEY, WOODRUFF, #B, 5/16" x 1", HT,
32	87644280	1	ARM ASSY., Fan Jackshaft Drive
33	219-8	1	NIPPLE, LUBE, 1/4"-28 NPT x .54" lg,
34	413-1048	1	BOLT, Hex, 5/8"-11 x 3", G5,
35	495-11066	2	WASHER, 5/8", SAE,
36	177195C1	1	PULLEY ASSY., Idler
37	492-11062	1	WASHER, LOCK, 5/8",
38	425-1410	1	NUT, Jam, 5/8"-11, G5,

PDF created with pdfFactory trial version www.pdffactory.com

09C-06 MOTOR ASSEMBLY, CLEANING FAN SPEED ADJUSTER

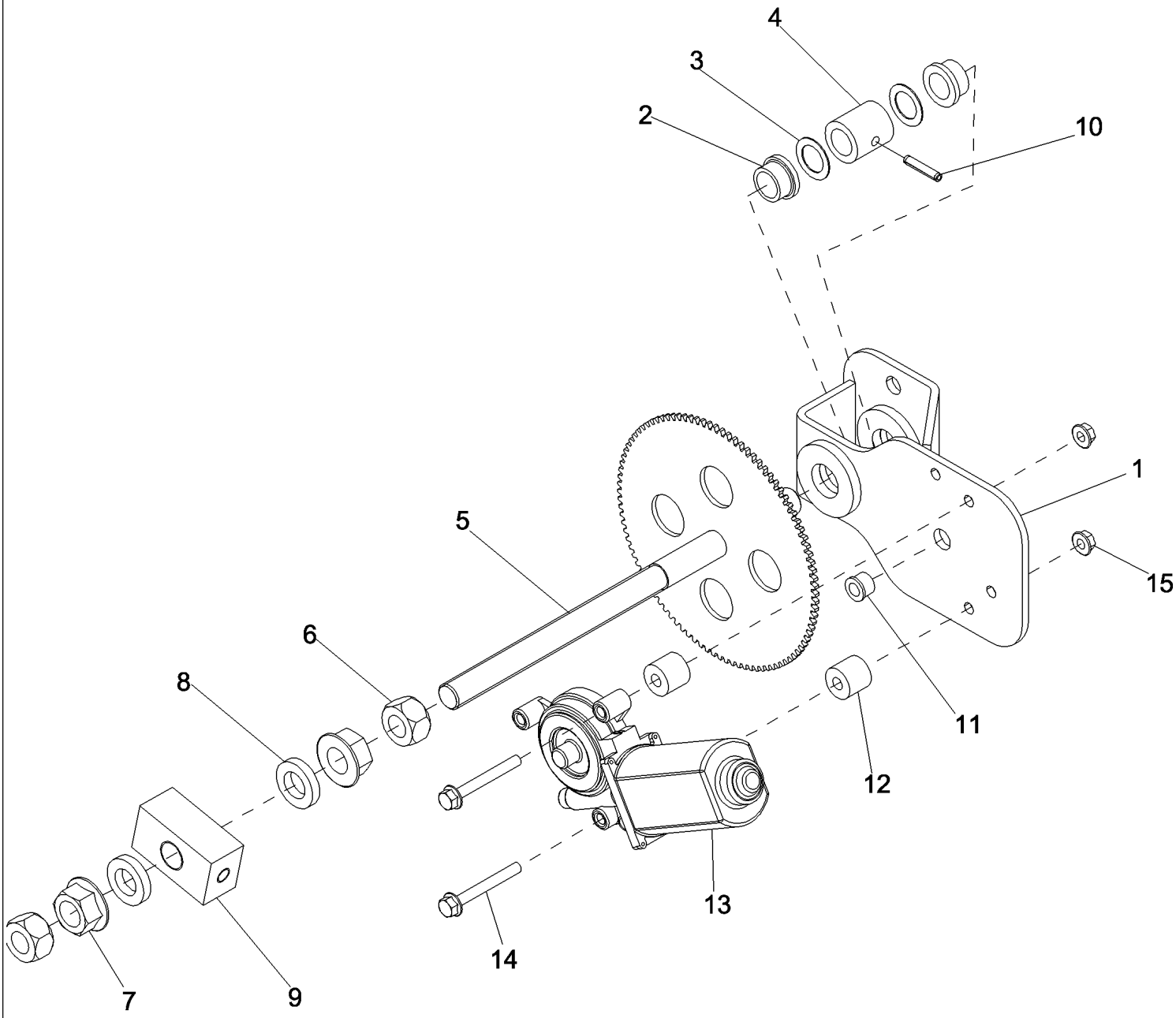

PDF created with pdfFactory trial version www.pdffactory.com

7088 AXIAL-FLOW COMBINE (EU) (4/08-)

09C-06 MOTOR ASSEMBLY, CLEANING FAN SPEED ADJUSTER

ссылка	Номер детали	Кол-во	Описание
1	87647064	1	SUPPORT ASSY., Fan Adjuster
2	55826C1	2	BUSHING,
3	495-81177	2	WASHER, 21/32" x 1" x .030",
4	87647066	1	SPACER,
5	142848A1	1	GEAR, Fan Speed Adjuster
6	425-1010	2	NUT, 5/8"-11, G5,
7	86521608	2	NUT, Flg, 5/8"-11, G5,
8	87652042	2	WASHER,
9	181206C1	1	BLOCK,
10	38-11216	1	PIN, LOCK, 3/16" x 1", Slotted,
11	55825C1	1	BUSHING,
12	113485A1	2	SPACER, Fan And Rotor Speed Motor
13	87693674	1	MOTOR, ELECTRIC, Fan And Rotor Speed
14	87670760	2	BOLT,
15	86050300	2	NUT, M6 x 1, Flg, Cl10,

PDF created with pdfFactory trial version www.pdffactory.com

09C-07 CONTROL ASSEMBLY, CLEANING FAN SPEED

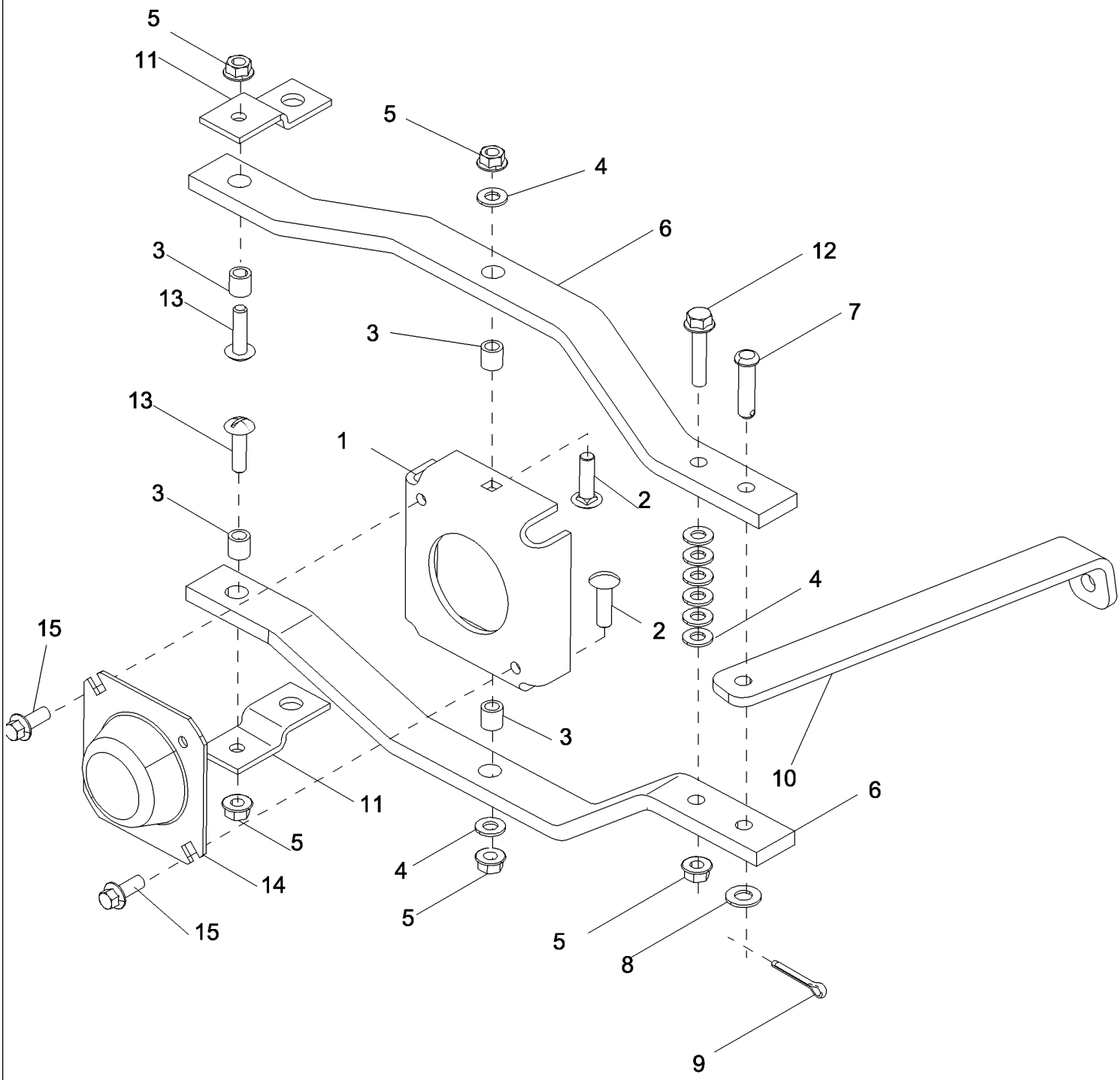

PDF created with pdfFactory trial version www.pdffactory.com

7088 AXIAL-FLOW COMBINE (EU) (4/08-)

09C-07 CONTROL ASSEMBLY, CLEANING FAN SPEED

ссылка	Номер детали	Кол-во	Описание
1	87647073	1	BRACKET, Fan Driver
2	87682385	2	BOLT,
3	87035448	4	SPACER, 1/2" Tube x 1/2",
4	495-11034	8	WASHER, 5/16", SAE,
5	86507066	5	NUT, M8 x 1.25, Flg, Cl 10,
6	87647079	2	COVER ASSY, Fan Control
7	439-1624	1	PIN, HEADED, 3/8" x 1 1/2",
8	495-11041	1	WASHER, 3/8", SAE,
9	432-812	1	PIN, SPLIT (COTTER), 1/8" x 3/4",
10	87647071	1	PLATE ASSY., Fan Drive Control
11	142853A2	2	SUPPORT, Fan Adjuster Extension
12	87698834	1	BOLT,
13	847-3830	2	SCREW,
14	87647075	1	COVER ASSY, Fan Drive Bearing
15	86625200	2	SCREW, SELF TAPPING, Hex Flg Hd, M8 x 20,

PDF created with pdfFactory trial version www.pdffactory.com

09C-08 SHIELDS, RIGHT HAND FAN DRIVE BELTS

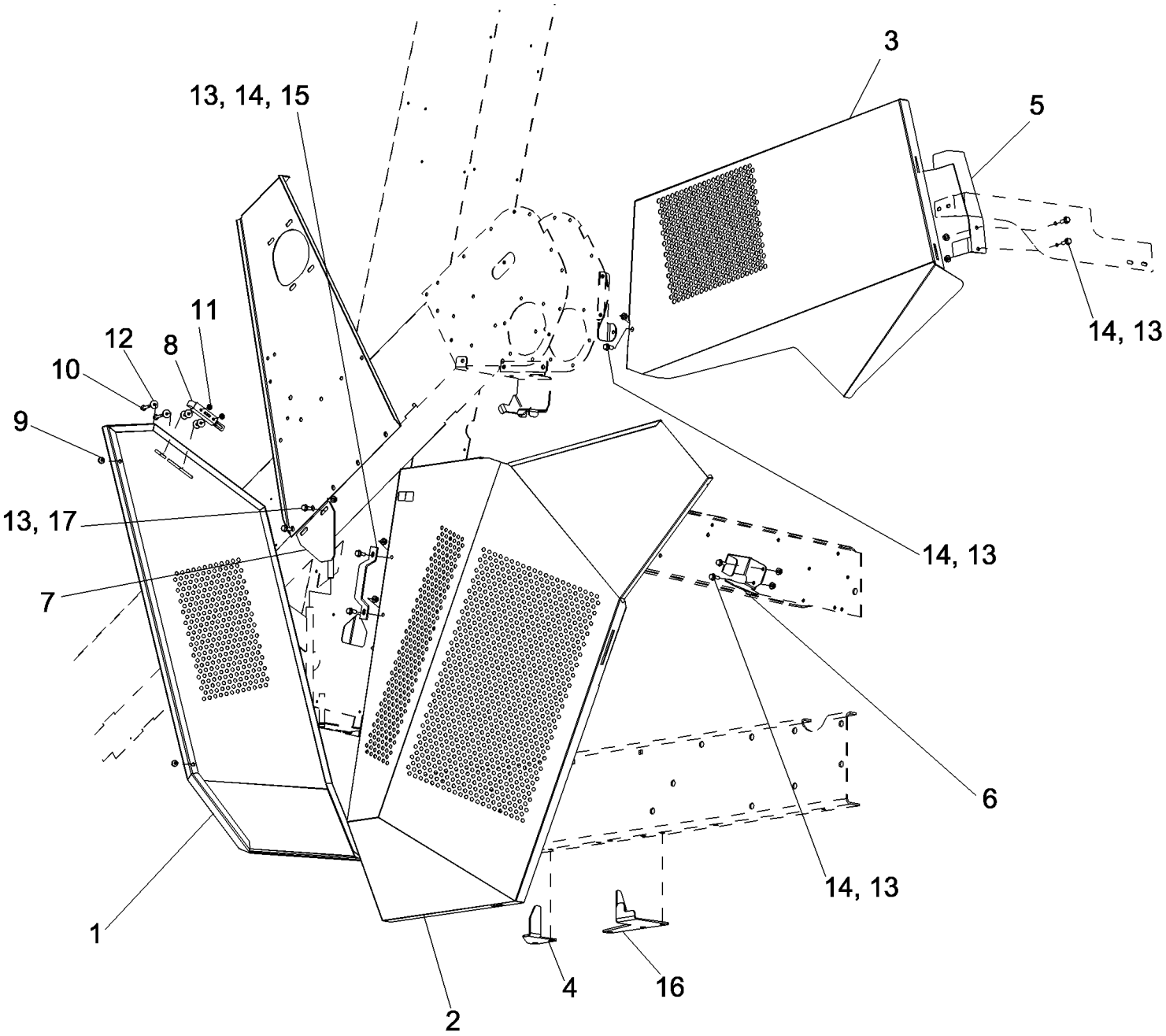

PDF created with pdfFactory trial version www.pdffactory.com

7088 AXIAL-FLOW COMBINE (EU) (4/08-)

09C-08 SHIELDS, RIGHT HAND FAN DRIVE BELTS

ссылка	Номер детали	Кол-во	Описание
1	84128958	1	GUARD ASSY., Right Hand
2	84128953	1	SHIELD, Right Hand Fan Inlet
3	84132266	1	SHIELD, Feeder Drive
4	87474210	1	SUPPORT ASSY., Right Hand Fan Shield
5	87699674	1	SUPPORT ASSY., Upper Shield, Front
6	87475710	1	BRACKET, Right Hand Fan Inlet Shield
7	87706143	1	BRACKET, Right Hand Door
8	142588A1	1	LOCK,
9	1321640C1	2	GROMMET, Feeder Adapter
10	87698832	2	BOLT,
11	825-5146	2	NUT, M6, Flg Ser,
12	140040	6	WASHER, M6 x 22 x 2,
13	86507066	8	NUT, M8 x 1.25, Flg, Cl 10,
14	87656137	7	BOLT, Hex Flg, M8 x 20, 10.9, Full Thd,
15	87735697	1	LATCH, Door Handle
16	87482795	1	SUPPORT ASSY., Right Hand Fan Shield
17	87698833	1	BOLT,

PDF created with pdfFactory trial version www.pdffactory.com

09C-09 SHIELD ASSEMBLY, RIGHT HAND REAR

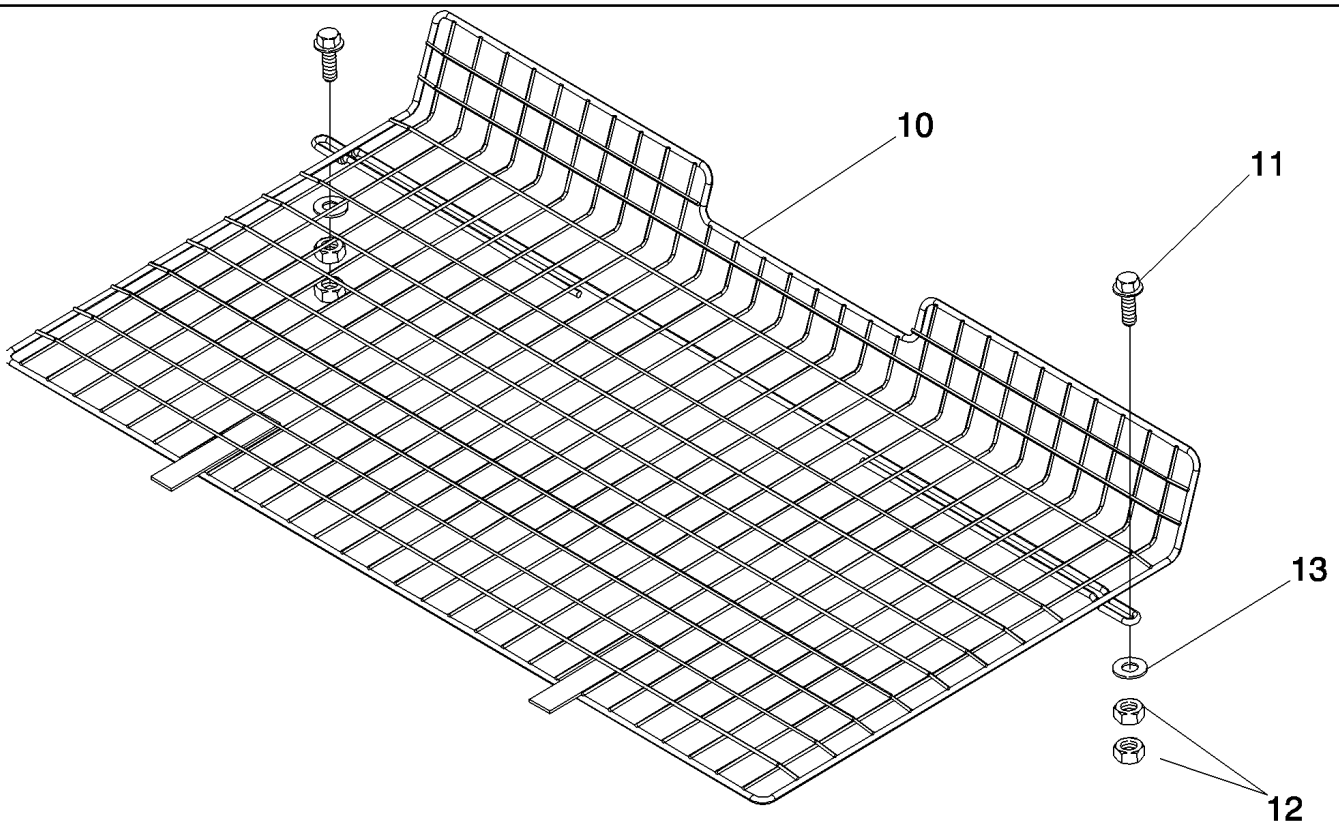

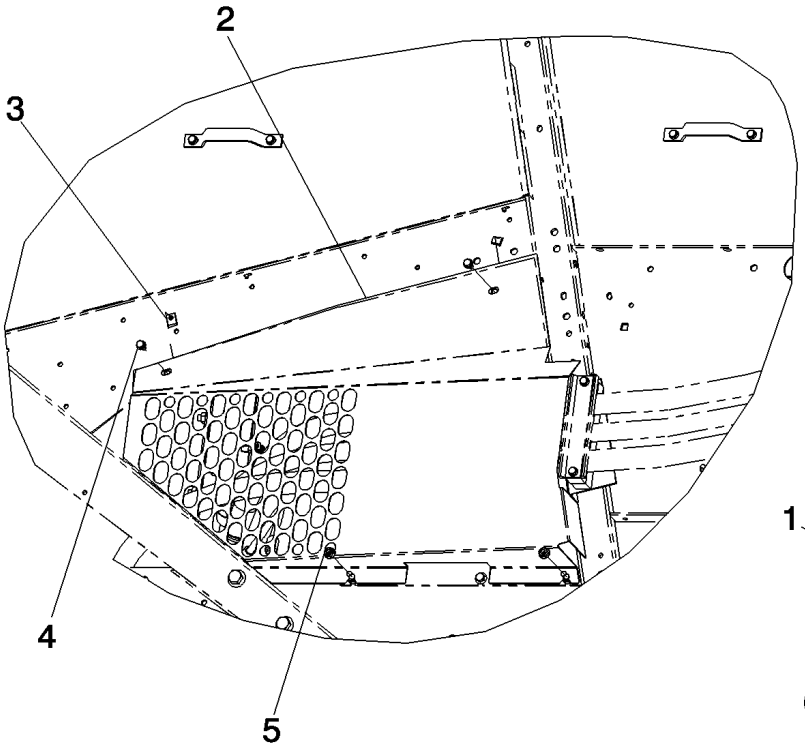

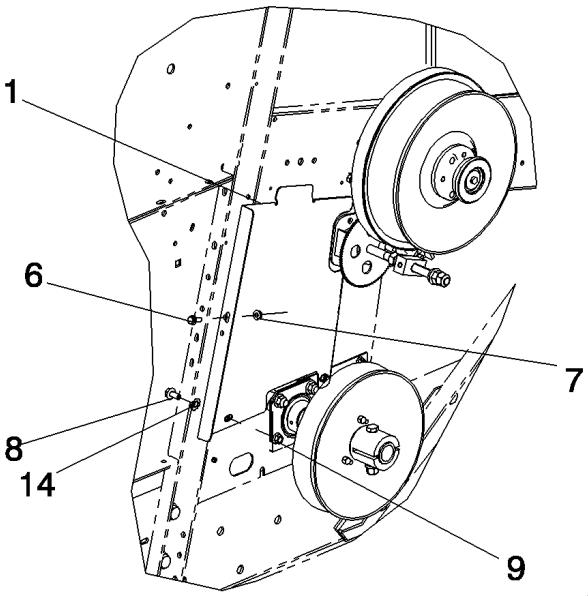

PDF created with pdfFactory trial version www.pdffactory.com

7088 AXIAL-FLOW COMBINE (EU) (4/08-)

09C-09 SHIELD ASSEMBLY, RIGHT HAND REAR

ссылка	Номер детали	Кол-во	Описание
1	84132268	1	SHIELD, Right Hand Rear
2	132657A2	1	CABLE, Reverser Shield Tether
3	87675531	2	BOLT,
4	86050300	4	NUT, M6 x 1, Flg, Cl10,
5	187884C1	3	SEAL, Foam Strip
6	1321640C1	1	GROMMET,
7	182925A1	1	LOCK, Latch Shield
8	96860C1	1	KNOB, Position Control Stop
9	231-5144	2	NUT, Flg, USR, 1/4"-20,

PDF created with pdfFactory trial version www.pdffactory.com

09C-10 SHIELDS, CLEANING FAN

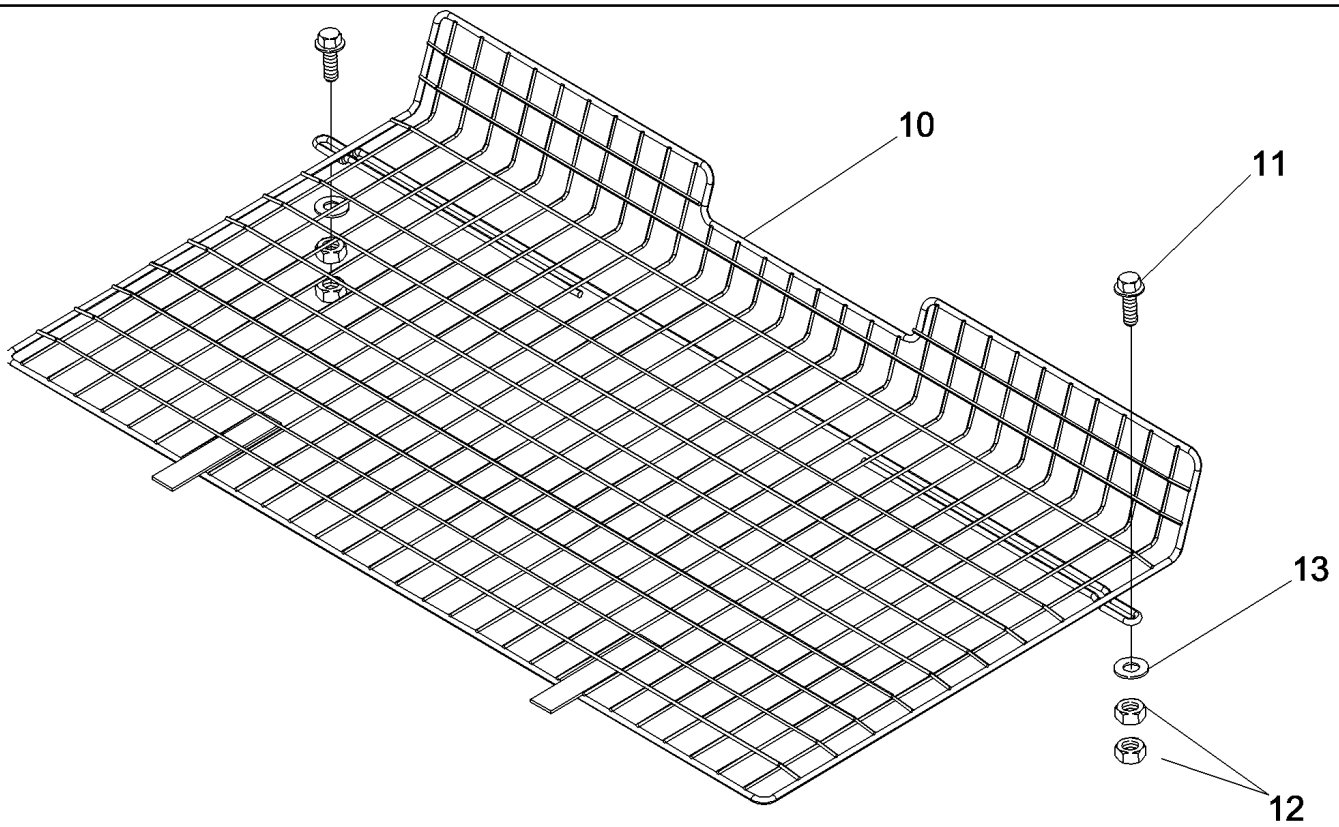

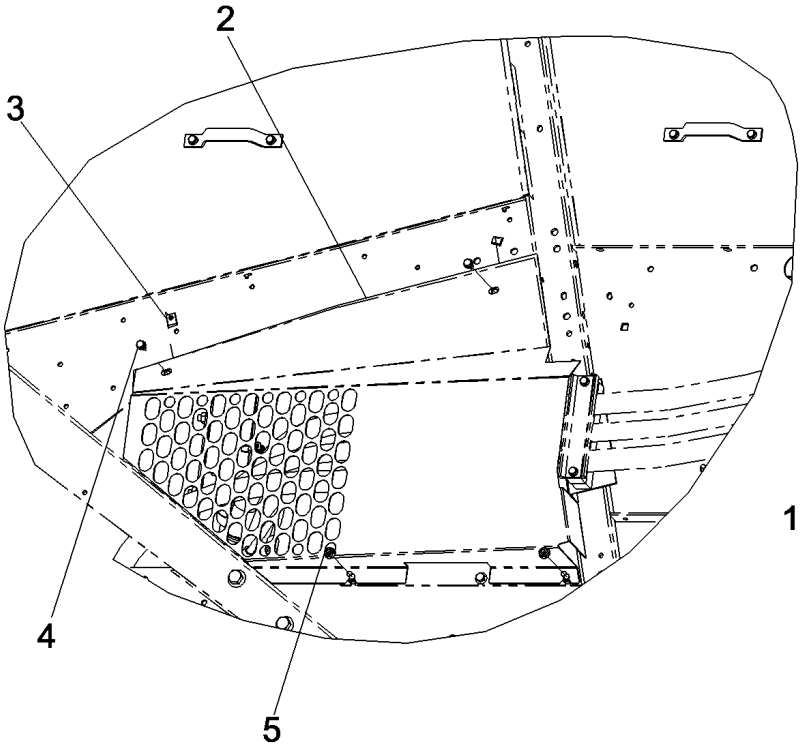

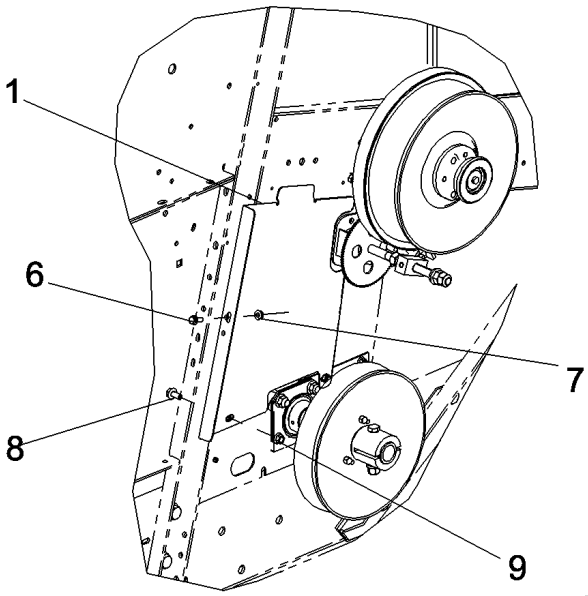

PDF created with pdfFactory trial version www.pdffactory.com

7088 AXIAL-FLOW COMBINE (EU) (4/08-)

09C-10 SHIELDS, CLEANING FAN

ссылка	Номер детали	Кол-во	Описание
1	87687568	1	SUPPORT, Cleaning Fan, Right Hand
2	87716307	1	SUPPORT, Cleaning Fan, Left Hand
3	86508354	2	NUT,
4	87681207	2	BOLT,
5	87547587	2	NUT,
6	87656137	1	BOLT, Hex Flg, M8 x 20, 10.9, Full Thd,
7	86507066	1	NUT, M8 x 1.25, Flg, Cl 10,
8	87698835	1	BOLT,
9	86050279	1	NUT, M10 x 1.5, Flg, Cl 10,
10	87754961	1	BRACKET,
11	409-7632	2	BOLT, Hex Flg, 3/8"-16 x 2", Serr,
12	425-106	4	NUT, 3/8"-16, G5,
13	495-81135	2	WASHER, 13/32" x 1" x .120",
14	131-415	1	NUT, LOCK, Push, Bolt Retainer, 3/8" x 25/32",

PDF created with pdfFactory trial version www.pdffactory.com

09D-01 CLEAN GRAIN AUGER TROUGH

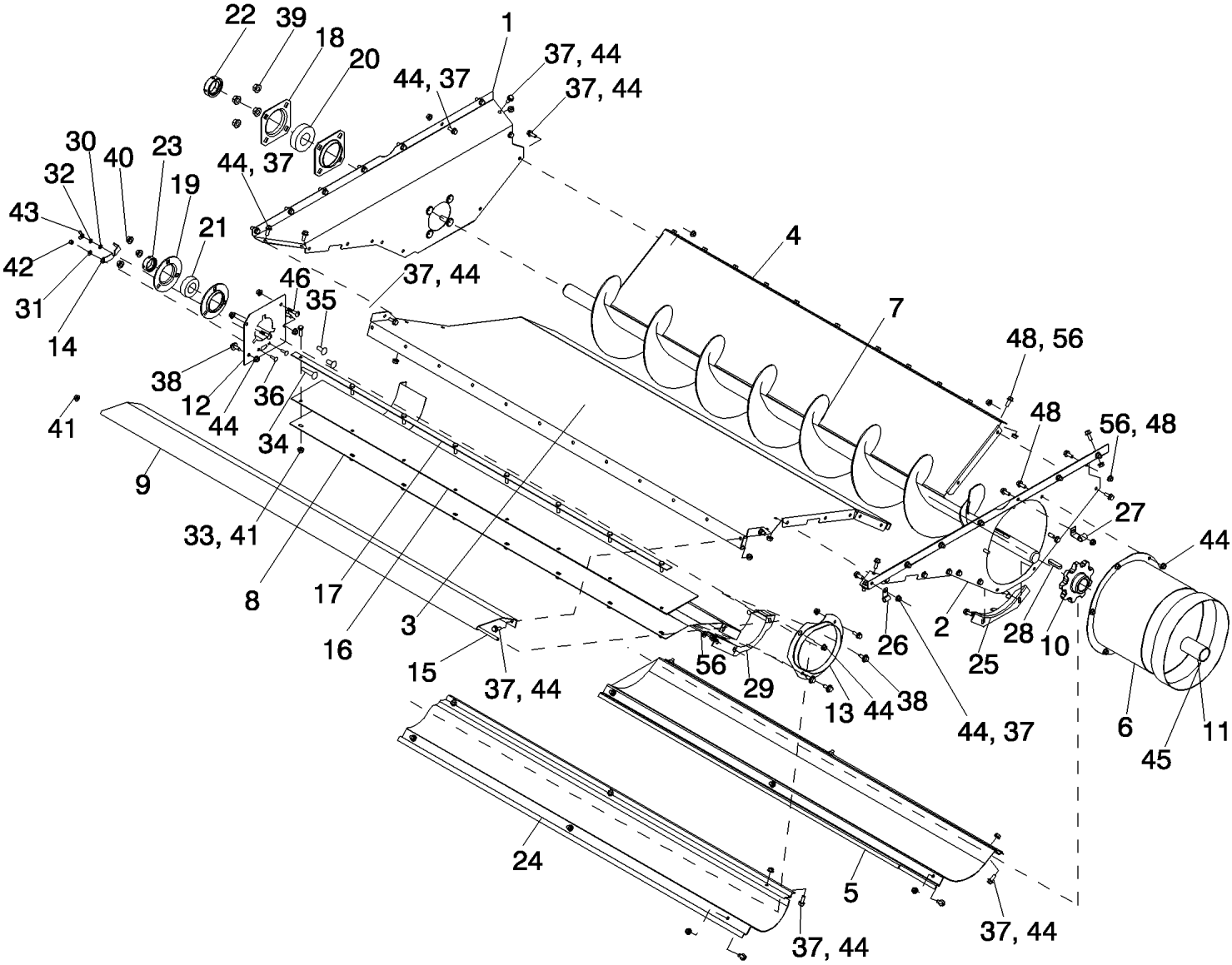

PDF created with pdfFactory trial version www.pdffactory.com

7088 AXIAL-FLOW COMBINE (EU) (4/08-)

09D-01 CLEAN GRAIN AUGER TROUGH

ссылка	Номер детали	Кол-во	Описание
1	87547269	1	WALL, Auger Trough, Clean Grain, Left Hand
2	87751063	1	WALL, Auger Trough, Clean Grain, Right Hand
3	87646217	1	TROUGH ASSY., Rear, Clean Grain
4	87651146	1	PAN ASSY., Front, Auger Trough, Clean Grain
5	87726709	1	PAN ASSY., Center, Auger Trough, Clean Grain
6	87751634	1	WALL, Clean Grain Auger
7	87510720	1	AUGER, Clean Grain
8	87751065	1	TROUGH ASSY., Tailing Auger
9	87379137	1	DOOR, Tailing Auger
10	87324981	1	SPROCKET, Auger, Clean Grain, Elevator
11	87325194	1	BUSHING, Auger, Clean Grain, Elevator
12	87395774	1	PLATE, Tailings Auger Bearing Support
13	87395983	1	FLANGE, Tailings Auger Tube
14	87396061	1	COVER, Cleanout
15	87393155	1	ROD, Tailings, Cleaning System
16	87392706	1	SEAL, OIL, Rear Shoe Horizontal
17	316709A1	1	STRIP, Shoe Seal
18	1307583C1	2	FLANGE, 80 mm, 4 Bolt
19	87397331	2	FLANGE, Bearing, 62 mm
20	52443	1	BEARING, BALL, Auger Shaft
21	617668R92	1	BEARING, Auger
22	87313329	1	COLLAR,
23	87431216	1	COLLAR, Bearing Lock
24	87726707	1	TROUGH ASSY., Tailings Auger
25	87751583	1	SUPPORT, Clean Grain Trough
26	516-2395	2	CLAMP, J, 7/16" Insul, 3/8" Bolt,
27	370383R1	1	CLIP, Cable Harness
28	170056	1	KEY, M12 x 8 x 50, Par,
29	87752633	1	SUPPORT, Tailings Auger Trough
30	86588450	1	WASHER, M6 x 12 x 1.6 Thk,
31	322357	1	WASHER, SPRING, Belleville, M6,
32	86517328	1	WASHER, LOCK, M6,
33	43127	8	BOLT, Hex, M8 x 25, 8.8,
34	350459	1	SCREW, Short NK, M10 x 50, Cl8.8, Full Thd,
35	86633356	2	BOLT, CARRIAGE, Short NK, M10 x 25, Cl8.8, Full Thd,
36	9706703	2	BOLT, CARRIAGE, Short NK, M6 x 20, Cl8.8, Full Thd,
37	87656137	80	BOLT, Hex Flg, M8 x 20, 10.9, Full Thd,
38	87673845	5	SCREW,
39	86512497	4	NUT, M12 x 1.75, Flg, Cl 10,
40	86050279	3	NUT, M10 x 1.5, Flg, Cl 10,
41	86619801	9	NUT, LOCK, M8 x 1.25, Flg, Cl 8,

PDF created with pdfFactory trial version www.pdffactory.com

ссылка	Номер детали	Кол-во	Описание
42	393392	1	NUT, LOCK, M6 x 1, Cl 8,
43	84814892	1	NUT, WING, M6 x 1,
44	86507066	88	NUT, M8 x 1.25, Flg, Cl 10,
45	84139353	1	BAND, Elevator Boot Seal
46	847-3820	2	SCREW, Sltd Tr Hd, M8 x 20, 10.9, Serr,

PDF created with pdfFactory trial version www.pdffactory.com

7088 AXIAL-FLOW COMBINE (EU) (4/08-)

09D-01A KIT, DIA, PERFORATED AUGER TROUGHS

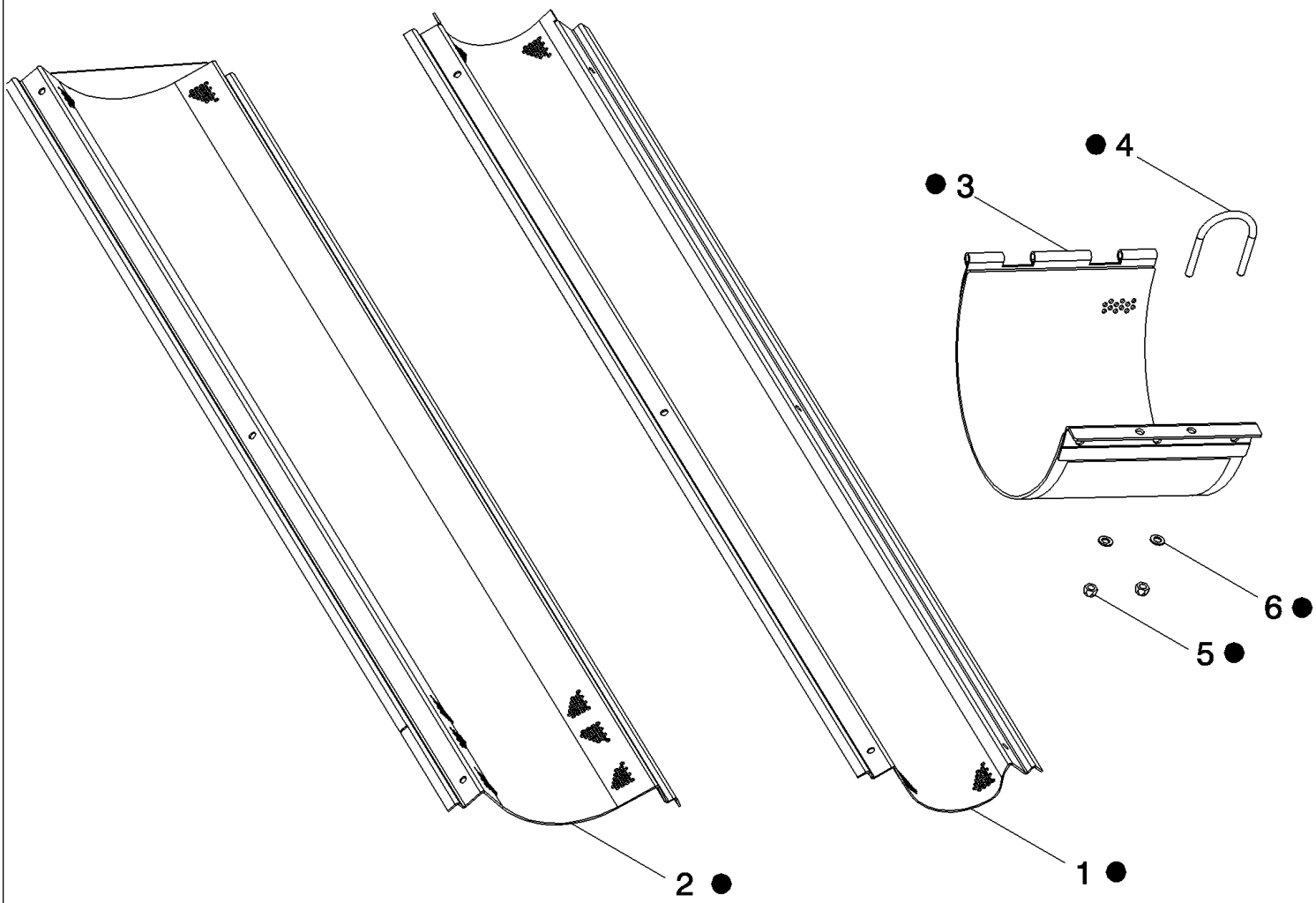

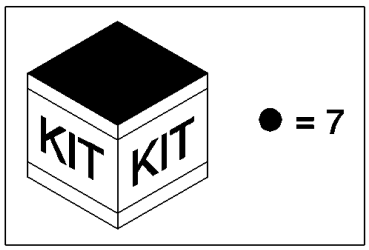

PDF created with pdfFactory trial version www.pdffactory.com

7088 AXIAL-FLOW COMBINE (EU) (4/08-)

09D-01A KIT, DIA, PERFORATED AUGER TROUGHS

ссылка	Номер детали	Кол-во	Описание
1	87726786	1	TROUGH ASSY., Tailing, Auger, Perforated
2	87726788	1	PAN ASSY., Center, Perforated, Auger Trough
3	87557880	1	DOOR ASSY., Boot, Grain Elevator, Perforated
4	84989315	1	U-BOLT, M8,
5	86629542	2	NUT, LOCK, M8 x 1.25, Cl 8,
6	86624184	2	WASHER, M8 x 16 x 1.6,
7	87707657	1	KIT, SERVICE, DIA, Perforated Auger Troughs, Inc. 1-6

PDF created with pdfFactory trial version www.pdffactory.com

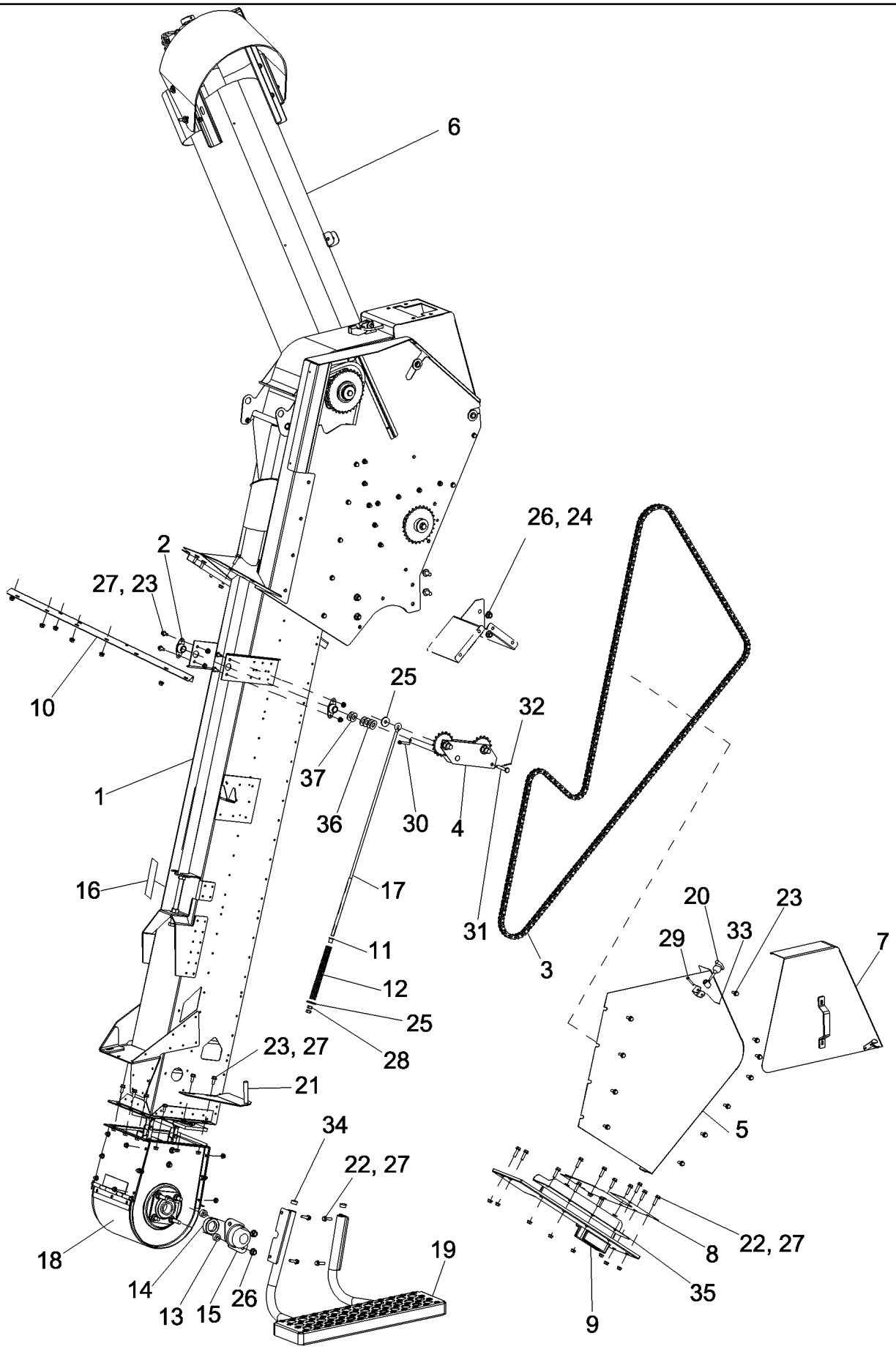

PDF created with pdfFactory trial version www.pdffactory.com

7088 AXIAL-FLOW COMBINE (EU) (4/08-)

09D-02 ELEVATOR, CLEAN GRAIN, STANDARD

ссылка	Номер детали	Кол-во	Описание
1	REF	1	INSTRUCTION, FRAME, Clean Grain Elevator With Head, See Figure 09D-03
2	87364072	2	BEARING, Flange
3	87362139	1	CHAIN (AGRICULTURE), Clean Grain Elevator Drive
4	REF	1	INSTRUCTION, TIGHTENER, Elevator Drive, See Figure 09D-08
5	84121900	1	SHIELD, Bubbler Drive
6	REF	1	INSTRUCTION, AUGER, Bubbler, See Figure 09D-09
7	84130534	1	COVER ASSY, Elevator Drive
8	87577614	1	PLATE ASSY., Elevator Front Seal
9	87360982	1	GUIDE, Elevator Drive Chain
10	1317475C1	1	BRACKET, Left Hand Tank Bottom Stiffener
11	87697440	1	BEARING, FLANGED,
12	523677R1	1	SPRING, Elevator Tightener Eyebolt
13	168368	2	SPACER,
14	87313329	1	COLLAR,
15	86996082	1	COVER,
16	144369A1	1	DECAL, Elevator Drive Adjustment, See Figure 09H-33
17	87365605	1	EYEBOLT, Elevator Tightener
18	REF	1	INSTRUCTION, BOOT, Grain Elevator, See Figure 09D-10
19	84160518	1	STEP, Clean Grain Elevator
20	494307C1	1	LATCH, Hood
21	87706141	1	SUPPORT, Lower Right Hand Door
22	87030775	24	BOLT, Hex Flg, M8 x 30, 10.9, Full Thd,
23	87656137	24	BOLT, Hex Flg, M8 x 20, 10.9, Full Thd,
24	87343550	2	BOLT,
25	12644301	2	WASHER, M10 x 35 x 3,
26	86512497	4	NUT, M12 x 1.75, Flg, Cl 10,
27	86507066	37	NUT, M8 x 1.25, Flg, Cl 10,
28	829-1410	2	NUT, M10, Cl 10,
29	728-640	1	RETAINER,
30	9515820	1	PIN, SPLIT (COTTER), M6.3 x 40,
31	728-1060	1	PIN, CLEVIS, M10 x 60,
32	733-3220	1	PIN, SPLIT (COTTER), M3.2 x 20,
33	733-1610	1	PIN, SPLIT (COTTER), M1.6 x 10,
34	86627131	2	PLUG, Dome, .875" hole, Nylon,
35	84154691	1	PLATE, Drive Tunnel Gap
36	87613197	4	WASHER,
37	87613196	2	WASHER,

PDF created with pdfFactory trial version www.pdffactory.com

09D-03 FRAME, CLEAN GRAIN ELEVATOR WITH HEAD, STANDARD

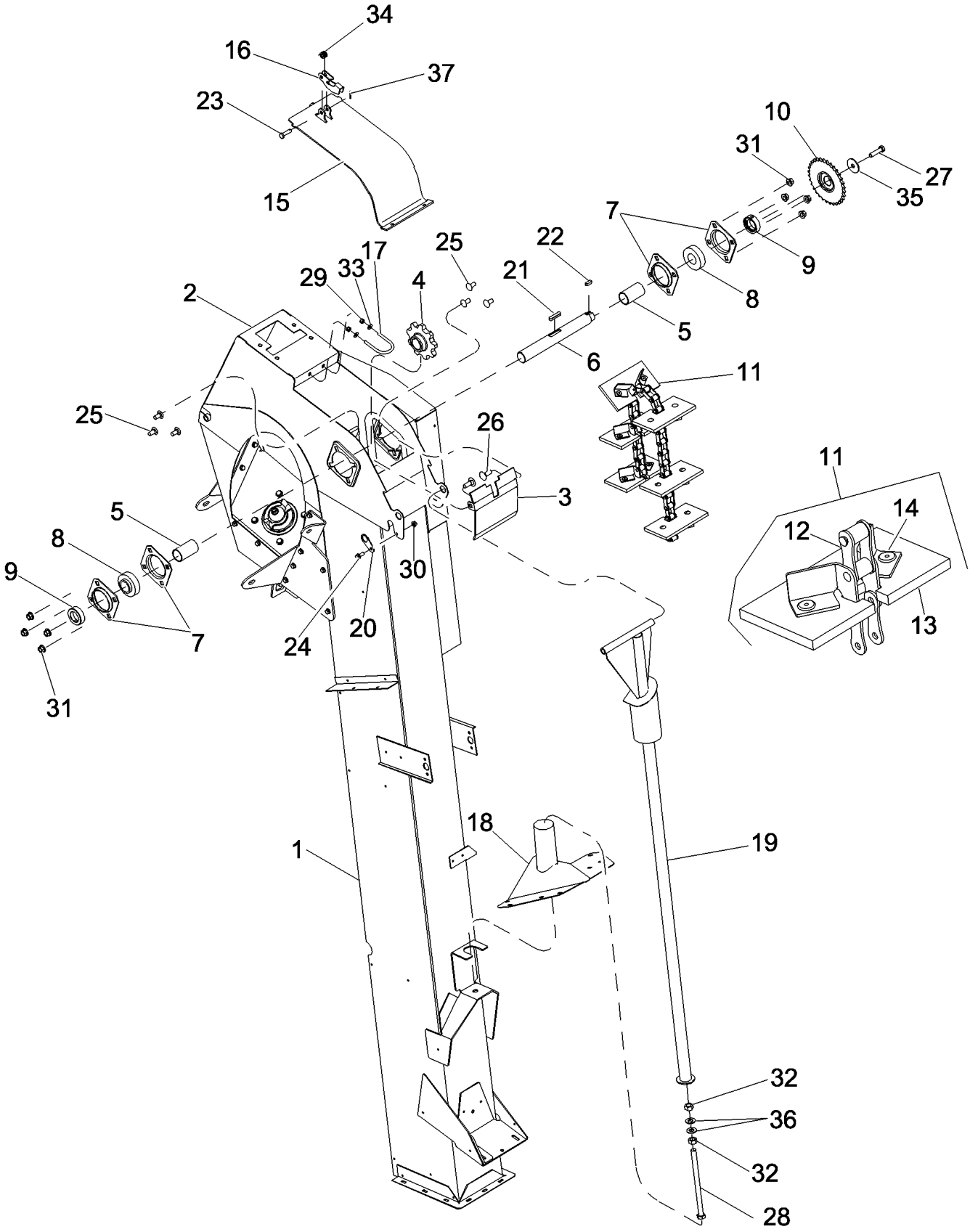

PDF created with pdfFactory trial version www.pdffactory.com

7088 AXIAL-FLOW COMBINE (EU) (4/08-)

09D-03 FRAME, CLEAN GRAIN ELEVATOR WITH HEAD, STANDARD

ссылка	Номер детали	Кол-во	Описание
1	NSS	1	NOT SERVICED SEPARATELY, ELEVATOR, Clean Grain, Standard, Without Bubbler, See Figure 09D-0
1	NSS	1	NOT SERVICED SEPARATELY, ELEVATOR, Clean Grain, Extended Wear, Without Auger, See Figure 09D-06
2	84128959	1	FRAME, Elevator Head
3	84164023	1	DIVIDER, Elevator Head
4	87324981	1	SPROCKET, Auger, Clean Grain Elevator
5	87337958	2	SPACER, Elevator Head Shaft
6	87384187	1	SHAFT, Elevator Head
7	1307583C1	4	FLANGE, 80 mm, 4 Bolt
8	52443	2	BEARING, BALL, Auger Shaft
9	87313329	2	COLLAR,
10	87394289	1	SPROCKET ASSY., Elevator Head Driven
11	87365387	1	CONVEYOR ASSY., Grain Elevator, Inc. 12 - 14
12	87362143	1	CHAIN (AGRICULTURE), Elevator Conveyor
13	1318493C2	38	FLIGHT, RUBBER, Grain Elevator Conveyor
14	185053C1	76	RIVET, Grain Elevator Conveyor
15	87727685	1	DOOR ASSY., Elevator Head Access
16	86581559	1	HANDLE,
17	84989315	1	U-BOLT, M8,
18	84130477	1	TRAP DOOR, Lower Elevator
19	84129021	1	ASSEMBLY, Elevator Head Adjust
20	84134664	1	BRACKET, Compression Column Lock
21	170056	1	KEY, M12 x 8 x 50, Par,
22	368317	1	KEY,
23	9507095	1	PIN, CLEVIS, M10 x 40,
24	87656137	1	BOLT, Hex Flg, M8 x 20, 10.9, Full Thd,
25	374895	6	BOLT, CARRIAGE, Short NK, M12 x 25, Cl8.8, Full Thd,
26	328754	2	BOLT, CARRIAGE, Short NK, M12 x 40, Cl8.8, Full Thd,
27	337476	1	BOLT, Hex, M12 x 50, 10.9,
28	389034	1	BOLT, Hex, M16 x 251, 8.8, Full Thd,
29	86629542	2	NUT, LOCK, M8 x 1.25, Cl 8,
30	86507066	1	NUT, M8 x 1.25, Flg, Cl 10,
31	86512497	8	NUT, M12 x 1.75, Flg, Cl 10,
32	100020	2	NUT, M16, Cl 8,
33	322358	2	WASHER, SPRING, Belleville, M8,
34	86624176	7	WASHER, M10 x 20 x 2,
35	496-81018	1	WASHER,
36	140048	2	WASHER, SPRING, Belleville, M16,
37	280251	1	PIN, SPLIT (COTTER), 3/32" x 1",

PDF created with pdfFactory trial version www.pdffactory.com

09D-04 ELEVATOR, CLEAN GRAIN, STANDARD WITHOUT BUBBLER

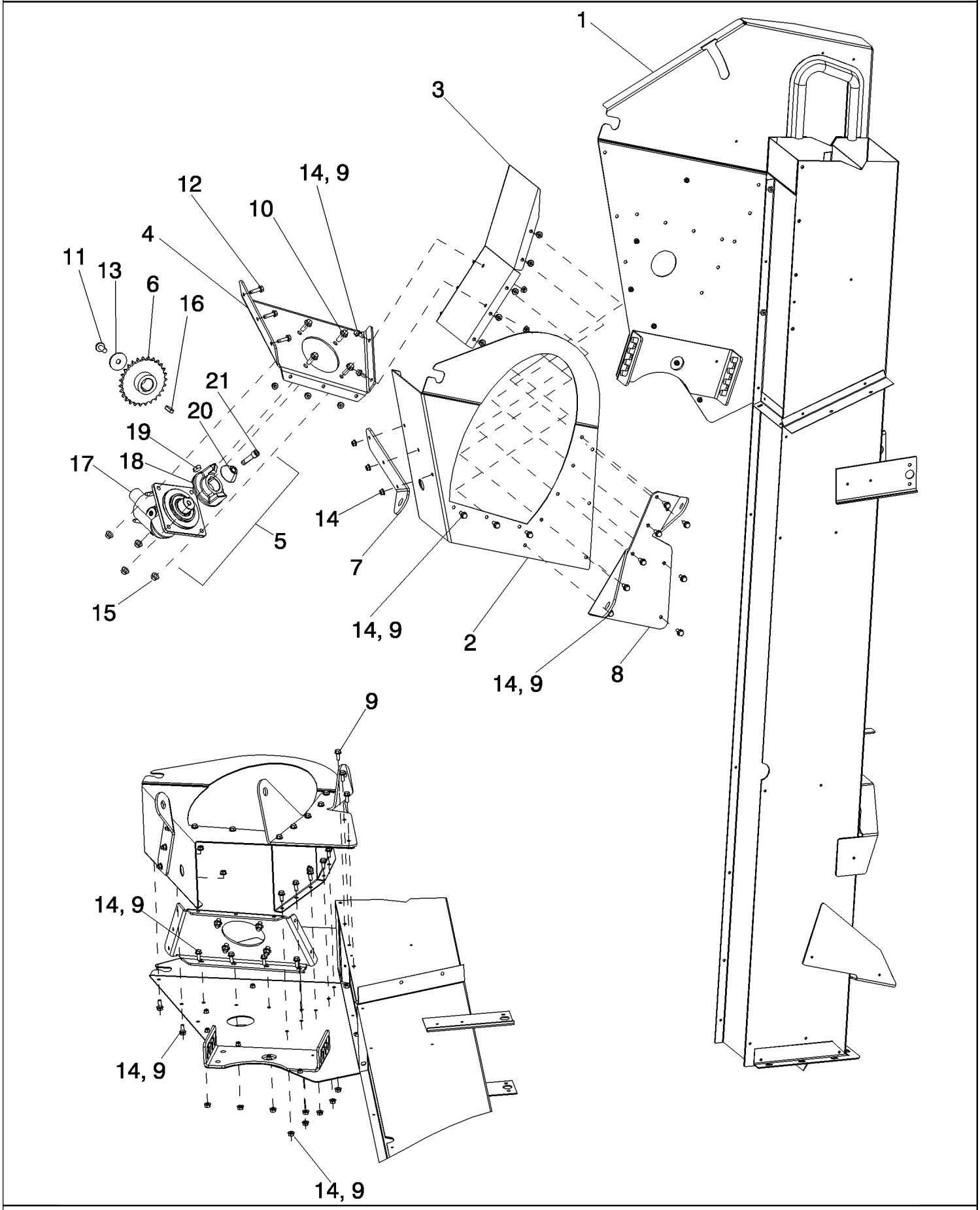

PDF created with pdfFactory trial version www.pdffactory.com

7088 AXIAL-FLOW COMBINE (EU) (4/08-)

09D-04 ELEVATOR, CLEAN GRAIN, STANDARD WITHOUT BUBBLER

ссылка	Номер детали	Кол-во	Описание
1	87656588	1	FRAME, Clean Grain Elevator
2	87656583	1	Auger Gearbox and Elevator Head
3	84122801	1	WALL, Bubbler Auger Sump
4	84122793	1	BRACKET, Gearbox and Bubbler
5	NSS	1	NOT SERVICED SEPARATELY, GEARBOX ASSEMBLY, Bubbler Auger With Coupler, Inc. 17 - 21
6	87356380	1	SPROCKET ASSY., Gearbox Drive
7	87656574	1	PLATE, Auger Hinge, Front
8	87653731	1	BRACKET, Bubbler Hinge, Rear
9	87656137	24	BOLT, Hex Flg, M8 x 20, 10.9, Full Thd,
10	857-10030	4	BOLT, Hex Flg, M10 x 30, 10.9,
11	87030508	1	BOLT, Hex Flg, M12 x 30, 10.9, Full Thd,
12	87030775	3	BOLT, Hex Flg, M8 x 30, 10.9, Full Thd,
13	496-81018	1	WASHER,
14	86507066	24	NUT, M8 x 1.25, Flg, Cl 10,
15	86050279	4	NUT, M10 x 1.5, Flg, Cl 10,
16	354775	1	KEY, M10 x 8 x 40, Par,
17	87491124	1	GEARBOX ASSY, Bubbler Auger, See Figure 09D-05
18	87470291	1	GEARBOX, Bubbler
19	87588870	1	KEY,
20	87695821	1	GEARBOX ASSY, Bubbler Auger Alignment
21	84129702	1	SCREW,

PDF created with pdfFactory trial version www.pdffactory.com

09D-05 GEARBOX, BUBBLER AUGER, ELEVATOR

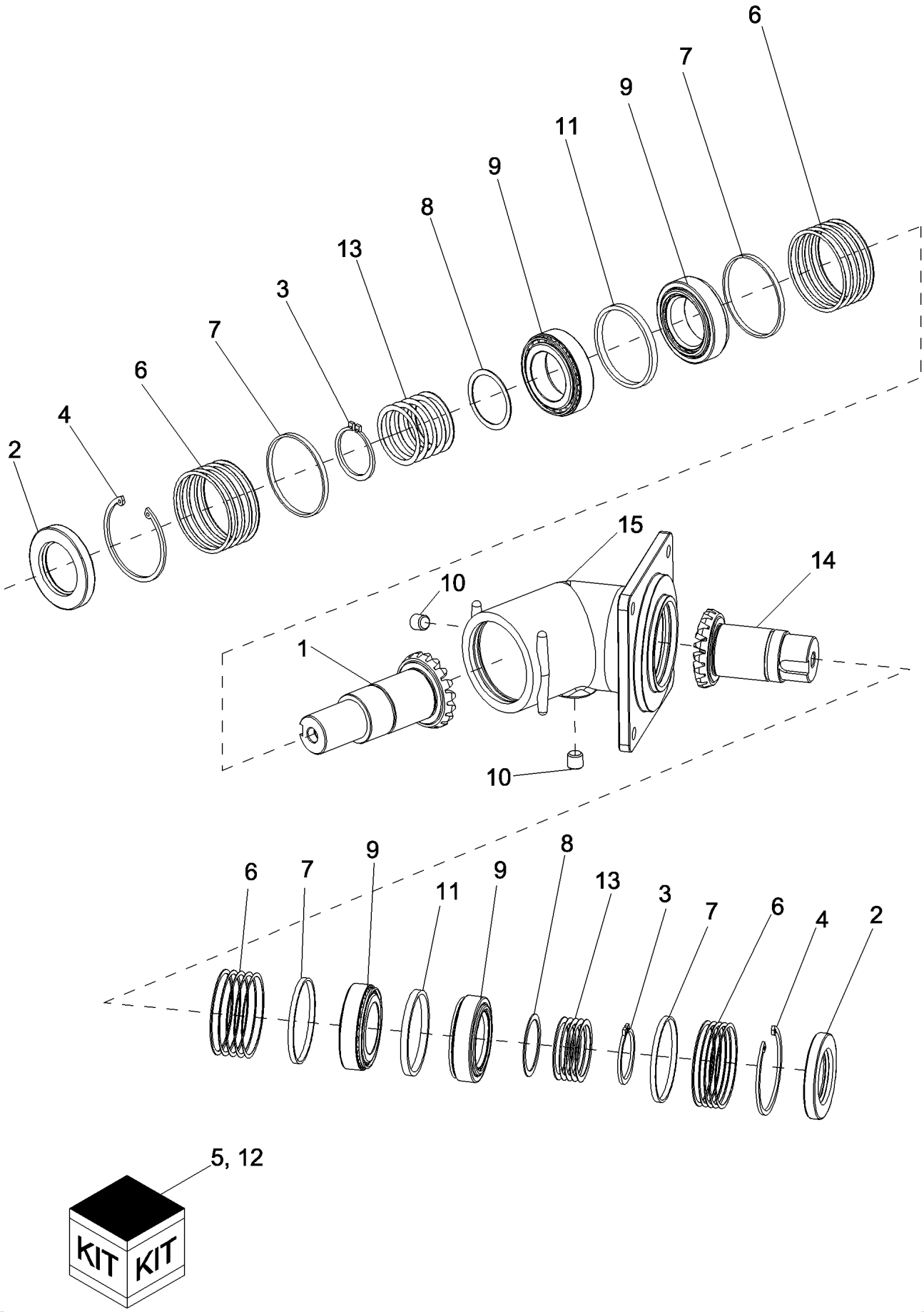

PDF created with pdfFactory trial version www.pdffactory.com

7088 AXIAL-FLOW COMBINE (EU) (4/08-)

09D-05 GEARBOX, BUBBLER AUGER, ELEVATOR

ссылка	Номер детали	Кол-во	Описание
1	87491122	1	SHAFT, Input, Bubbler Gearbox
2	84437282	2	SEAL, RUBBER,
3	84437572	2	RING, SNAP, Ext, M41.5,
4	382103	2	RING, SNAP, M75, Int,
5	84437581	4	KIT, SHIM, Incl. 6
6	NSS	1	NOT SERVICED SEPARATELY, SHIM, 0.30
6	NSS	1	NOT SERVICED SEPARATELY, SHIM, 0.35
6	NSS	1	NOT SERVICED SEPARATELY, SHIM, 0.40
6	NSS	1	NOT SERVICED SEPARATELY, SHIM, 0.50
6	NSS	1	NOT SERVICED SEPARATELY, SHIM, 1.00
7	84437569	4	SPACER,
8	84437580	2	SHIM, 1mm Thk,
9	84438713	4	BEARING, ROLLER, TAPERED,
10	84437573	2	PLUG, 1/4" Gas,
11	84437570	2	SPACER,
12	84437582	2	KIT, SHIM,
13	NSS	1	NOT SERVICED SEPARATELY, SHIM, 0.30
13	NSS	1	NOT SERVICED SEPARATELY, SHIM, 0.35
13	NSS	1	NOT SERVICED SEPARATELY, SHIM, 0.40
13	NSS	1	NOT SERVICED SEPARATELY, SHIM, 0.50
13	NSS	1	NOT SERVICED SEPARATELY, SHIM, 1.00
14	84437278	1	GEAR, Gearbox Pinion
15	84437272	1	HOUSING, 57 Degree Gearbox

PDF created with pdfFactory trial version www.pdffactory.com

09D-06 ELEVATOR, CLEAN GRAIN, EXTENDED WEAR

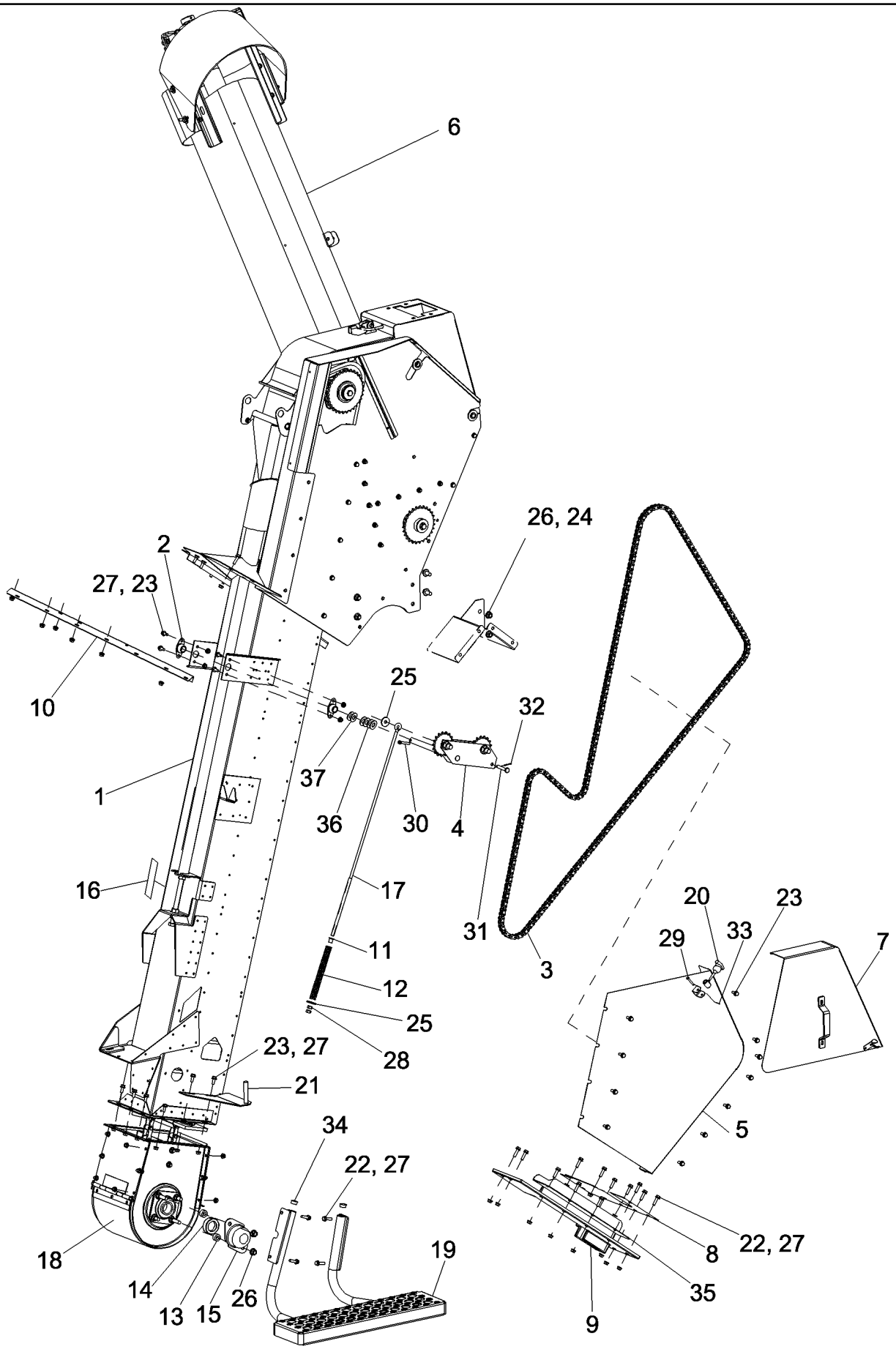

PDF created with pdfFactory trial version www.pdffactory.com

7088 AXIAL-FLOW COMBINE (EU) (4/08-)

09D-06 ELEVATOR, CLEAN GRAIN, EXTENDED WEAR

ссылка	Номер детали	Кол-во	Описание
1	REF	1	INSTRUCTION, FRAME, Clean Grain Elevator With Head, Extended Wear, See Figure 09D-07
2	87364072	2	BEARING,
3	87362139	1	CHAIN (AGRICULTURE), Clean Grain Elevator Drive
4	REF	1	INSTRUCTION, TIGHTENER, Elevator Drive, See Figure 09D-08
5	84121900	1	SHIELD, Bubbler Drive
6	REF	1	INSTRUCTION, AUGER, Bubbler, Extended Wear, See Figure 09D-09
7	84130534	1	COVER ASSY, Elevator Drive
8	87577614	1	PLATE ASSY., Elevator Front Seal
9	87360982	1	GUIDE, Elevator Drive Chain
10	1317475C1	1	BRACKET, Left Hand Tank Bottom Stiffener
11	87697440	1	BEARING, FLANGED,
12	523677R1	1	SPRING,
13	168368	2	SPACER,
14	87313329	1	COLLAR,
15	86996082	1	COVER,
16	144369A1	1	DECAL, Elevator Drive Adjustment
17	87365605	1	EYEBOLT, Elevator Tightener
18	REF	1	INSTRUCTION, BOOT, Grain Elevator, See Figure 09D-10
19	84160518	1	STEP, Clean Grain Elevator
20	494307C1	1	LATCH, Hood
21	87706141	1	SUPPORT, Lower Right Hand Door
22	87030775	24	BOLT, Hex Flg, M8 x 30, 10.9, Full Thd,
23	87656137	24	BOLT, Hex Flg, M8 x 20, 10.9, Full Thd,
24	87343550	2	BOLT,
25	12644301	2	WASHER, M10 x 35 x 3,
26	86512497	4	NUT, M12 x 1.75, Flg, Cl 10,
27	86507066	37	NUT, M8 x 1.25, Flg, Cl 10,
28	829-1410	2	NUT, M10, Cl 10,
29	728-640	1	RETAINER,
30	9515820	1	PIN, SPLIT (COTTER), M6.3 x 40,
31	728-1060	1	PIN, CLEVIS, M10 x 60,
32	733-3220	1	PIN, SPLIT (COTTER), M3.2 x 20,
33	733-1610	1	PIN, SPLIT (COTTER), M1.6 x 10,
34	86627131	2	PLUG, Dome, .875" hole, Nylon,
35	84154691	1	PLATE, Drive Tunnel Gap
36	87613197	4	WASHER,
37	87613196	2	WASHER,

PDF created with pdfFactory trial version www.pdffactory.com

09D-07 FRAME, CLEAN GRAIN ELEVATOR WITH HEAD, EXTENDED WEAR

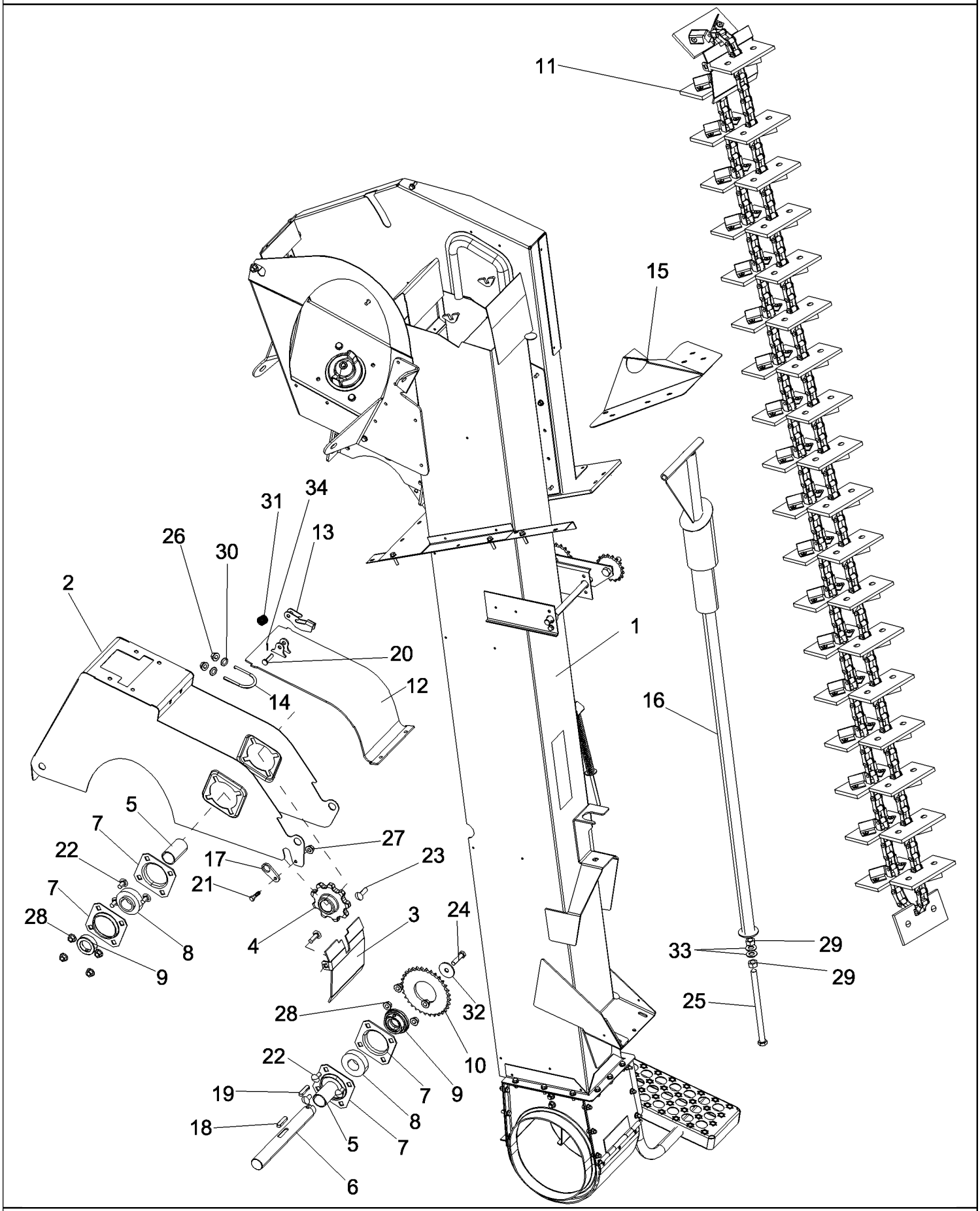

PDF created with pdfFactory trial version www.pdffactory.com

7088 AXIAL-FLOW COMBINE (EU) (4/08-)

09D-07 FRAME, CLEAN GRAIN ELEVATOR WITH HEAD, EXTENDED WEAR

ссылка	Номер детали	Кол-во	Описание
1	REF	1	INSTRUCTION, ELEVATOR, Clean Grain, Extended Wear, Without Auger, See Figure 09D-03
2	84128959	1	FRAME, Elevator Head
3	84164023	1	DIVIDER, Elevator Head
4	87324981	1	SPROCKET, Auger, Clean Grain, Elevator
5	87337958	2	SPACER, Elevator Head Shaft
6	87384187	1	SHAFT, Elevator Head
7	1307583C1	4	FLANGE, 80 mm, 4 Bolt
8	52443	2	BEARING, BALL, Auger Shaft
9	87313329	2	COLLAR,
10	87394289	1	SPROCKET ASSY., Elevator Head Driven
11	87365387	1	CONVEYOR ASSY., Grain Elevator
12	87727685	1	DOOR ASSY., Elevator Head Access
13	86581559	1	HANDLE,
14	84989315	1	U-BOLT, M8,
15	84130477	1	TRAP DOOR, Lower Elevator
16	84129021	1	ASSEMBLY, Elevator Head Adjustment
17	NSS	1	NOT SERVICED SEPARATELY, SUPPORT, Compression Column Lock
18	170056	1	KEY, M12 x 8 x 50, Par,
19	368317	1	KEY,
20	9507095	1	PIN, CLEVIS, M10 x 40,
21	87656137	1	BOLT, Hex Flg, M8 x 20, 10.9, Full Thd,
22	374895	6	BOLT, CARRIAGE, Short NK, M12 x 25, Cl8.8, Full Thd,
23	328754	2	BOLT, CARRIAGE, Short NK, M12 x 40, Cl8.8, Full Thd,
24	337476	1	BOLT, Hex, M12 x 50, 10.9,
25	389034	1	BOLT, Hex, M16 x 251, 8.8, Full Thd,
26	86629542	2	NUT, LOCK, M8 x 1.25, Cl 8,
27	86507066	1	NUT, M8 x 1.25, Flg, Cl 10,
28	86512497	8	NUT, M12 x 1.75, Flg, Cl 10,
29	100020	2	NUT, M16, Cl 8,
30	322358	2	WASHER, SPRING, Belleville, M8,
31	86624176	7	WASHER, M10 x 20 x 2,
32	496-81018	1	WASHER,
33	140048	2	WASHER, SPRING, Belleville, M16,
34	280251	1	PIN, SPLIT (COTTER), 3/32" x 1",

PDF created with pdfFactory trial version www.pdffactory.com

09D-08 TIGHTENER, ELEVATOR DRIVE

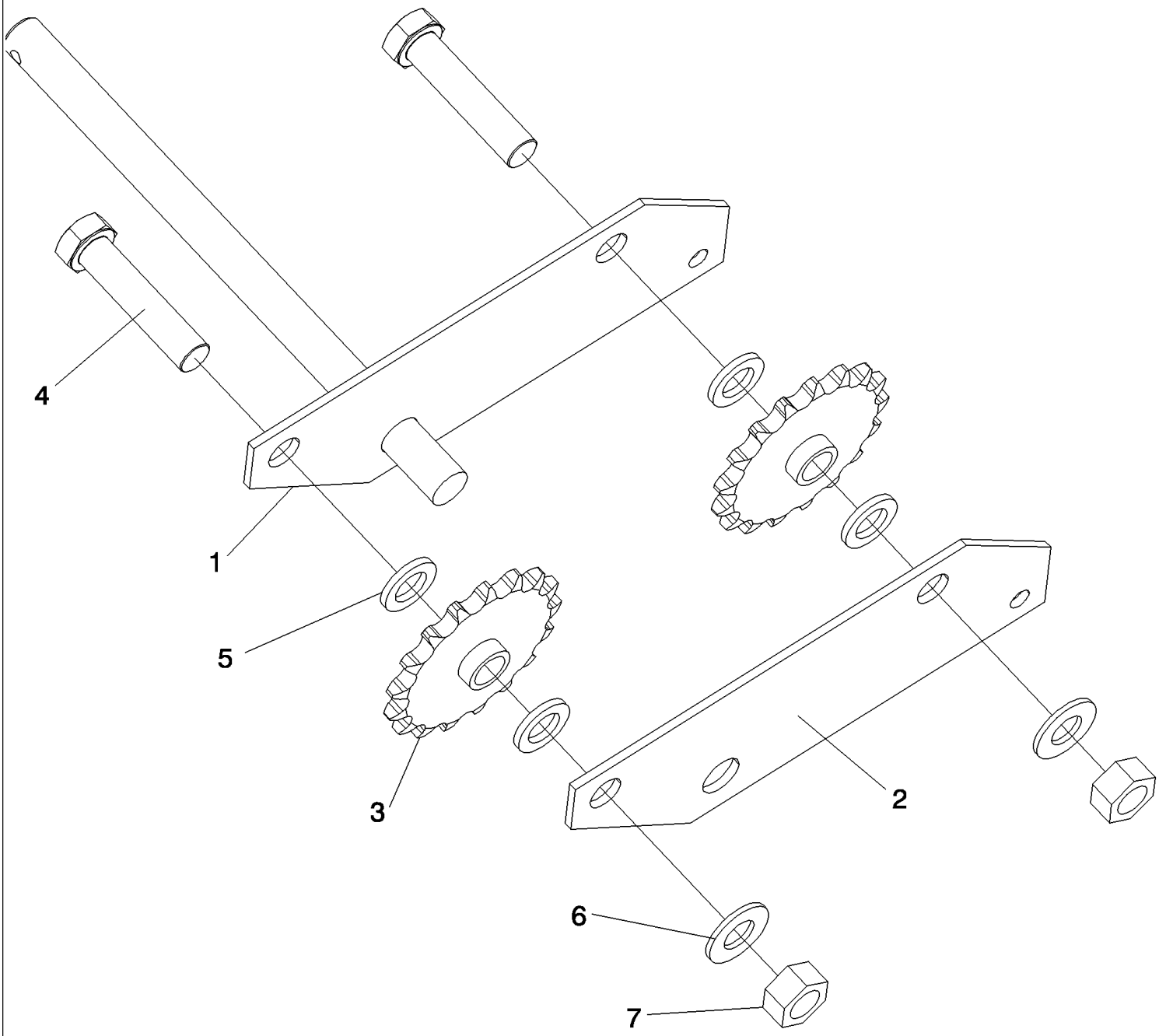

PDF created with pdfFactory trial version www.pdffactory.com

7088 AXIAL-FLOW COMBINE (EU) (4/08-)

09D-08 TIGHTENER, ELEVATOR DRIVE

ссылка	Номер детали	Кол-во	Описание
1	NSS	1	NOT SERVICED SEPARATELY, SUPPORT, Double Idler
2	87582484	1	PLATE, Elevator Drive Tightener
3	298009A1	2	DRIVE SPROCKET, Main
4	9847468	2	BOLT, Hex, M16 x 70, 10.9,
5	86588503	4	WASHER, M16 x 28 x 3,
6	140048	2	WASHER, SPRING, Belleville, M16,
7	100020	2	NUT, M16, Cl 8,

PDF created with pdfFactory trial version www.pdffactory.com

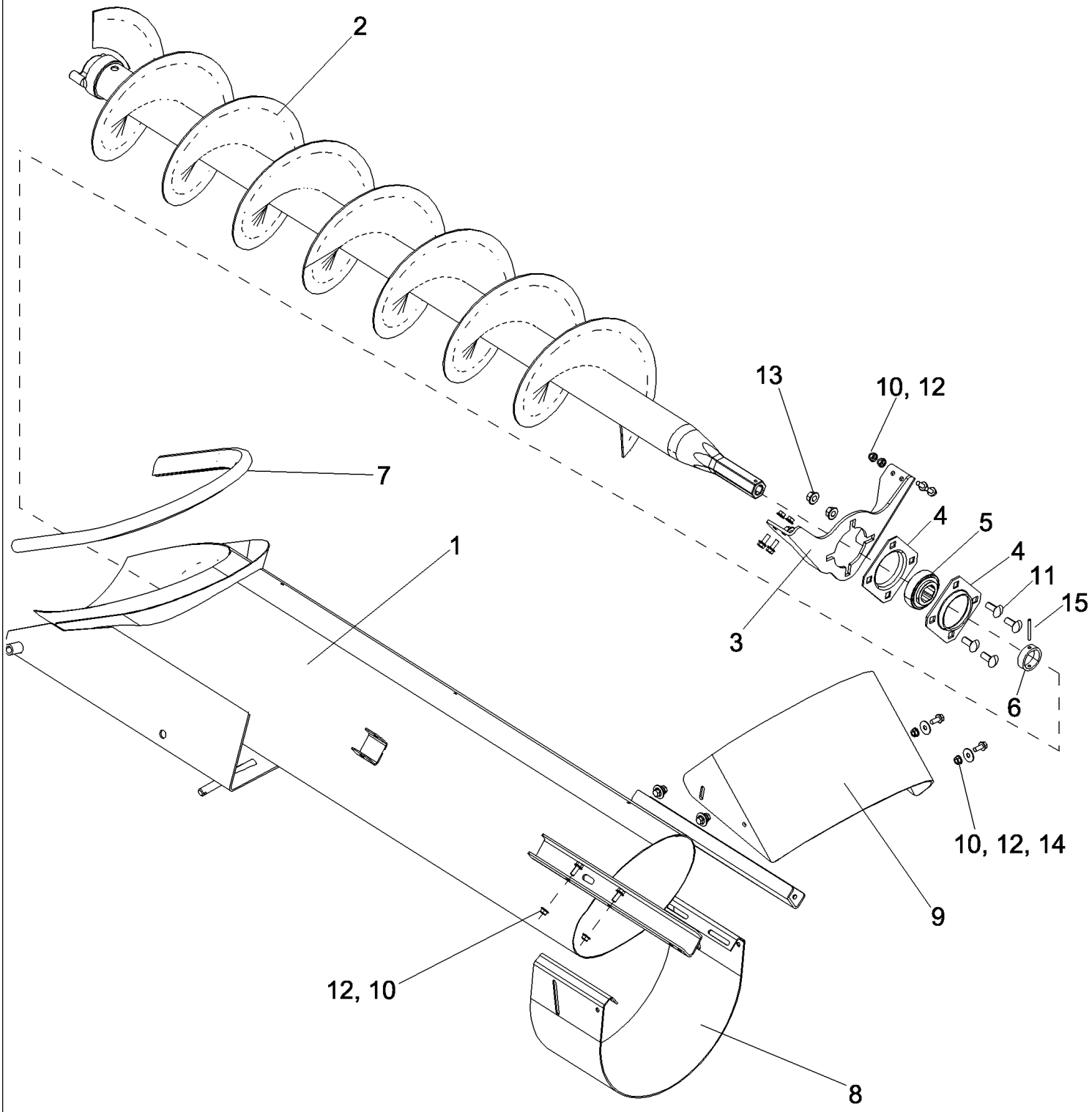

PDF created with pdfFactory trial version www.pdffactory.com

7088 AXIAL-FLOW COMBINE (EU) (4/08-)

09D-09 AUGER, BUBBLER

ссылка	Номер детали	Кол-во	Описание
1	84173032	1	HOUSING ASSY., Bubbler Auger
1	84173040	1	HOUSING ASSY., Bubbler Auger, Extended Wear
2	87563930	1	AUGER, Bubbler
3	87563887	1	SUPPORT, Bubbler Auger Bearing
4	1307583C1	2	FLANGE, 80 mm, 4 Bolt
5	694444	1	BEARING, BALL, Bubbler Auger
6	87571176	1	COLLAR, Bubbler Auger Shaft
7	NS	1	NOT SERVICED, BULB SEAL, Bubbler Auger, Cut 995 mm From 87350510
8	84138953	1	DEFLECTOR, Bubbler Auger
9	84138950	1	DEFLECTOR, Deflector, Bubbler Auger
10	87656137	12	BOLT, Hex Flg, M8 x 20, 10.9, Full Thd,
11	120044	4	BOLT, CARRIAGE, Short NK, M12 x 30, Cl8.8, Full Thd,
12	86507066	12	NUT, M8 x 1.25, Flg, Cl 10,
13	86512497	4	NUT, M12 x 1.75, Flg, Cl 10,
14	87013865	4	WASHER, M8 x 28 x 1.6,
15	84024216	1	PIN, LOCK, M5 x 50, Slotted,

PDF created with pdfFactory trial version www.pdffactory.com

09D-10 BOOT, GRAIN ELEVATOR

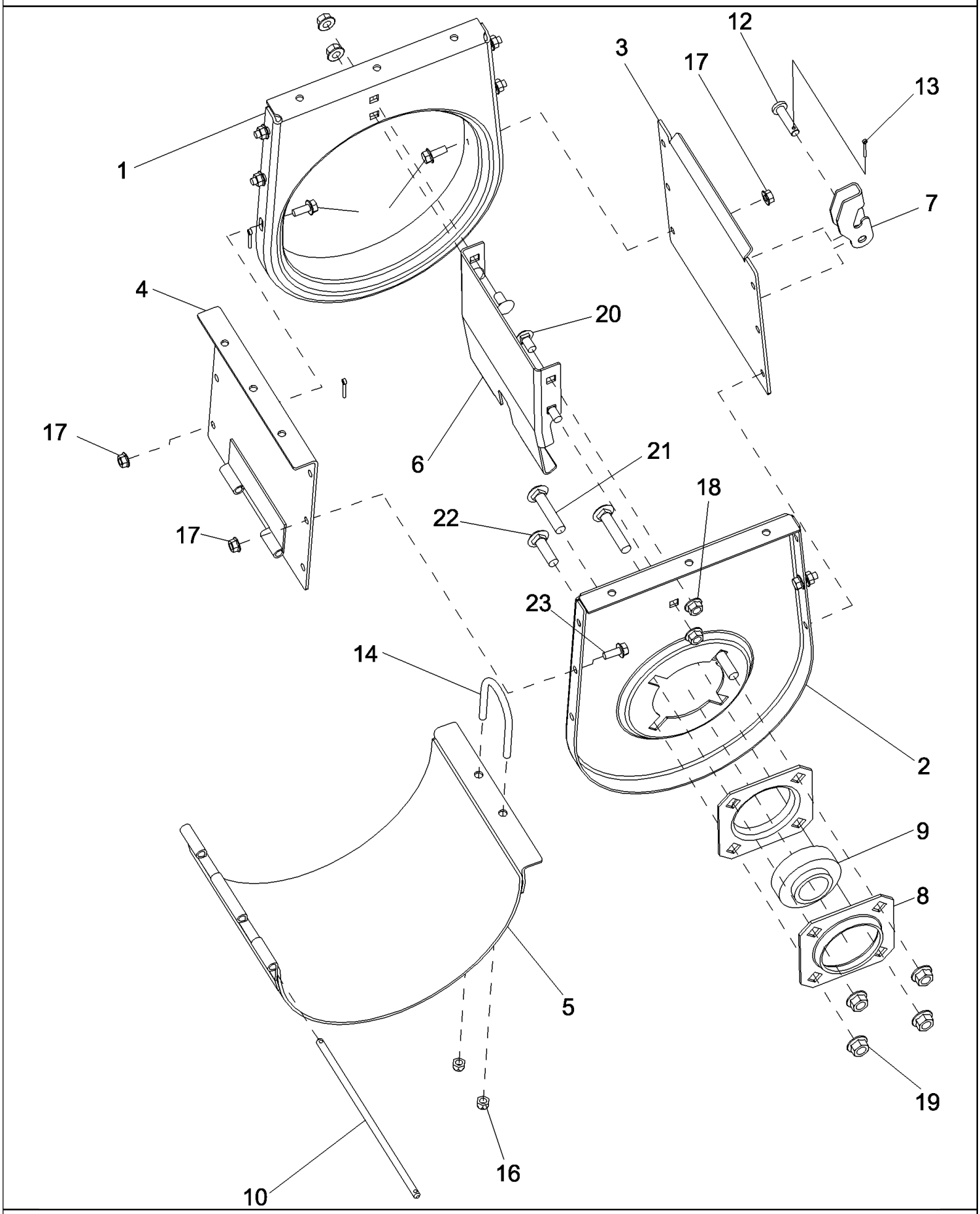

PDF created with pdfFactory trial version www.pdffactory.com

7088 AXIAL-FLOW COMBINE (EU) (4/08-)

09D-10 BOOT, GRAIN ELEVATOR

ссылка	Номер детали	Кол-во	Описание
1	87310001	1	SIDE PLATE, Inner Boot, Grain Elevator
2	87310150	1	SIDE ASSY., Outer Boot, Grain Elevator
3	87329806	1	COVER ASSY, Front Boot, Grain Elevator
4	87329771	1	COVER ASSY, Rear Boot, Grain Elevator
5	87330124	1	DOOR ASSY., Boot, Grain Elevator
6	87333675	1	DEFLECTOR, Boot, Grain Elevator
7	86581559	1	HANDLE,
8	1307583C1	2	FLANGE, 80 mm, 4 Bolt
9	52443	1	BEARING, BALL, Auger Shaft
10	87384964	1	PIN,
11	80755	2	PIN, SPLIT (COTTER), 1/8" x 1" L,
12	9507095	1	PIN, CLEVIS, M10 x 40,
13	280251	1	PIN, SPLIT (COTTER), 3/32" x 1",
14	84989315	1	U-BOLT, M8,
16	87681210	2	NUT, Hex, M8, Cl 10,
17	86507066	8	NUT, M8 x 1.25, Flg, Cl 10,
18	86050279	4	NUT, M10 x 1.5, Flg, Cl 10,
19	86512497	4	NUT, M12 x 1.75, Flg, Cl 10,
20	120041	4	BOLT, CARRIAGE, Short NK, M10 x 20, Cl8.8, Full Thd,
21	412097	2	BOLT, CARRIAGE, Short NK, M12 x 60, Cl8.8,
22	328754	2	BOLT, CARRIAGE, Short NK, M12 x 40, Cl8.8, Full Thd,
23	87656137	8	BOLT, Hex Flg, M8 x 20, 10.9, Full Thd,

PDF created with pdfFactory trial version www.pdffactory.com

09D-11 ELEVATOR, JACKSHAFT, DRIVE IDLER

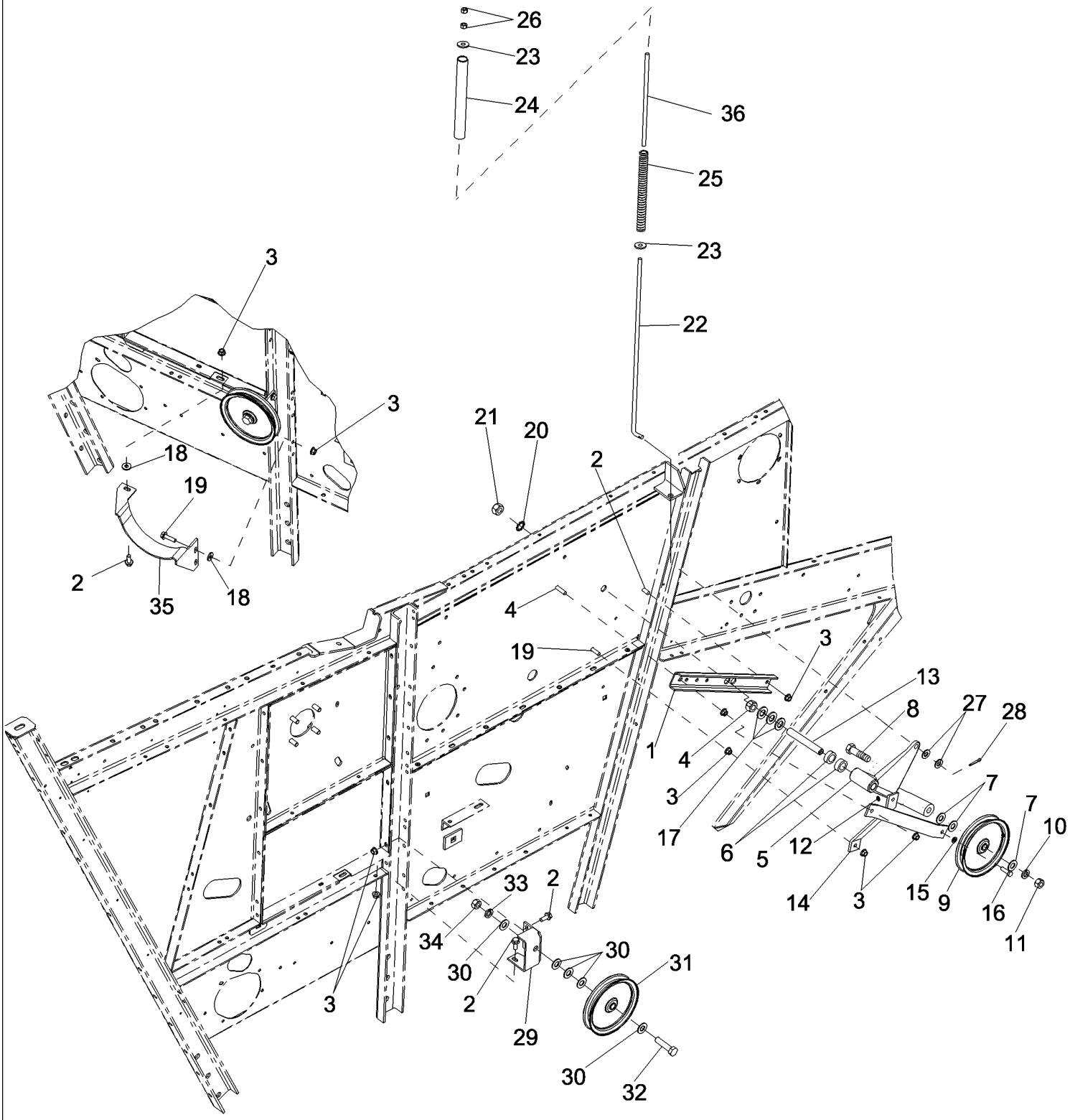

PDF created with pdfFactory trial version www.pdffactory.com

7088 AXIAL-FLOW COMBINE (EU) (4/08-)

09D-11 ELEVATOR, JACKSHAFT, DRIVE IDLER

ссылка	Номер детали	Кол-во	Описание
1	87742025	1	CHANNEL, Pivot Support
2	87698836	5	BOLT,
3	86050279	11	NUT, M10 x 1.5, Flg, Cl 10,
4	87698839	1	BOLT,
5	87742016	1	ARM, Elevator Jackshaft Drive, Idler, Inc. 6
6	556448R1	2	BUSHING,
7	495-11066	3	WASHER, 5/8", SAE,
8	413-1048	1	BOLT, Hex, 5/8"-11 x 3", G5,
9	86996213	1	PULLEY, Belt, Stationary Idler
10	492-11062	1	WASHER, LOCK, 5/8",
11	425-1010	1	NUT, 5/8"-11, G5,
12	219-87	1	NIPPLE, LUBE, 1/4"-28 x .56" lg, Self-Tap,
13	1327538C1	1	STUD, Pivot Arm
14	87742018	2	SUPPORT, Pivot Support
15	492-11038	1	WASHER, LOCK, 3/8",
16	413-620	1	BOLT, Hex, 3/8"-16 x 1 1/4", G5, Full Thd,
17	495-11081	3	WASHER, 3/4", SAE,
18	495-81135	3	WASHER, 13/32" x 1" x .120",
19	87698838	3	BOLT,
20	493-41078	1	WASHER, LOCK, Ext Tooth, 3/4",
21	425-1012	2	NUT, 3/4"-10, G5,
22	115160A1	1	ROD, Elevator Jackshaft Belt Tensioner
23	495-81162	2	WASHER, 17/32" x 1 1/2" x .179",
24	1994931C1	1	TUBE, Elevator Drive Spring
25	155311C1	1	SPRING, Elevator Drive Idler Lever
26	425-108	2	NUT, 1/2"-13, G5,
27	495-11053	2	WASHER, 1/2", SAE,
28	432-1216	1	PIN, SPLIT (COTTER), 3/16" x 1",
29	87742023	1	SUPPORT, Elevator Drive, Fixed Idler
30	495-11066	5	WASHER, 5/8", SAE,
31	86996213	1	PULLEY, Belt, Stationary Idler
32	413-1040	1	BOLT, Hex, 5/8"-11 x 2 1/2", G5,
33	492-11062	1	WASHER, LOCK, 5/8",
34	425-1010	1	NUT, 5/8"-11, G5,
35	87742021	1	GUIDE, Lower Belt, Cleaning Unit
36	84155000	1	SPACER, Belt Tension Spring, Inner

PDF created with pdfFactory trial version www.pdffactory.com

09D-12 ELEVATOR ASSEMBLY, TAILINGS INSTALLED

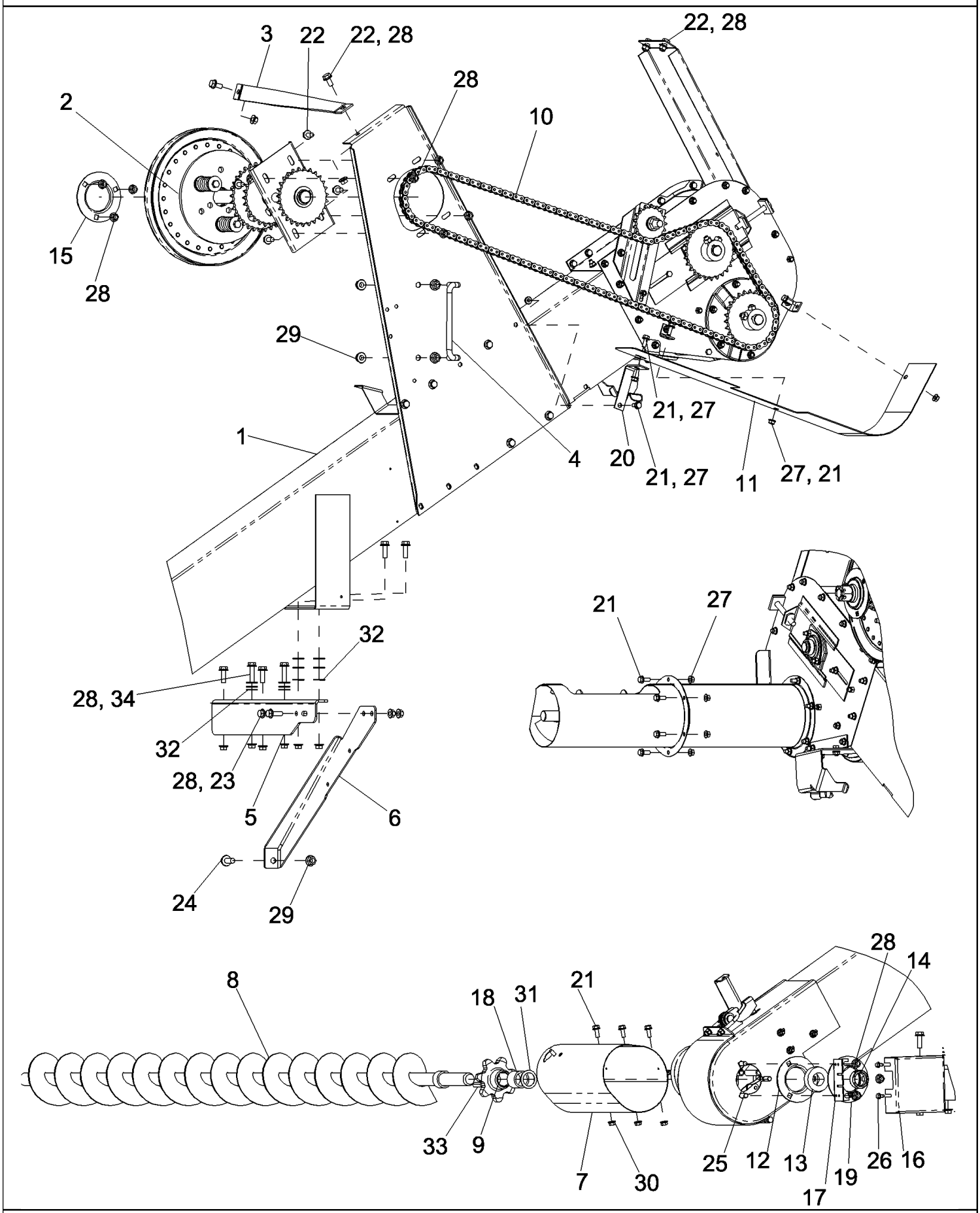

PDF created with pdfFactory trial version www.pdffactory.com

7088 AXIAL-FLOW COMBINE (EU) (4/08-)

09D-12 ELEVATOR ASSEMBLY, TAILINGS INSTALLED

ссылка	Номер детали	Кол-во	Описание
1	REF	1	INSTRUCTION, ELEVATOR ASSEMBLY, Tailings, See Figure 09D-13
2	REF	1	INSTRUCTION, DRIVE ASSEMBLY, Elevator Jackshaft, See Figure 09D-14
3	87620385	1	PLATE ASSY., Outer Elevator Jackshaft
4	87711329	1	HANDLE, Elevator Step
5	87635253	1	BRACKET, Elevator Support, Upper
6	87704825	1	BRACKET, Elevator Lower Support
7	87689184	1	TUBE, Tailings Trough Extension
8	144028A2	1	AUGER, Tailings
9	87740180	1	SPROCKET, Tailings Elevator
10	1302671C92	1	CHAIN, Tailings Elevator Drive
11	87728575	1	SHEET, Tailings Elevator
12	87397331	1	FLANGE, Bearing, 62 mm
13	156011C92	1	BEARING, BALL, Auger
14	38767	1	COLLAR, Locking
15	36403	1	FLANGE,
16	87740295	1	COVER, Sensor, Tailings Elevator, Right Hand
17	87740297	1	COVER, Shaft Speed Sensor
18	144038A1	1	SPACER, Sprocket, Tailings Auger
19	87430514	1	FLANGE, Bearing
20	87757141	1	PLATE, Shield
21	87656137	13	BOLT, Hex Flg, M8 x 20, 10.9, Full Thd,
22	87698835	8	BOLT,
23	87698837	6	BOLT,
24	87030508	1	BOLT, Hex Flg, M12 x 30, 10.9, Full Thd,
25	87682391	3	BOLT, Short NK, M10 x 25, Cl 10.9,
26	281-1478	2	SCREW, SELF TAPPING, Hex Wash Hd, 1/4" x 1/2",
27	86507066	10	NUT, M8 x 1.25, Flg, Cl 10,
28	86050279	22	NUT, M10 x 1.5, Flg, Cl 10,
29	86512497	5	NUT, M12 x 1.75, Flg, Cl 10,
30	87681210	3	NUT, Hex, M8, Cl 10,
31	495-81202	1	WASHER, 1 9/32" x 1 3/4" x .060",
32	140046	12	WASHER, SPRING, Belleville, M12,
33	Q1443	1	KEY, 5/16" Sq x 1 1/2", Par,
34	87698839	2	BOLT,

PDF created with pdfFactory trial version www.pdffactory.com

09D-13 ELEVATOR ASSEMBLY, TAILINGS

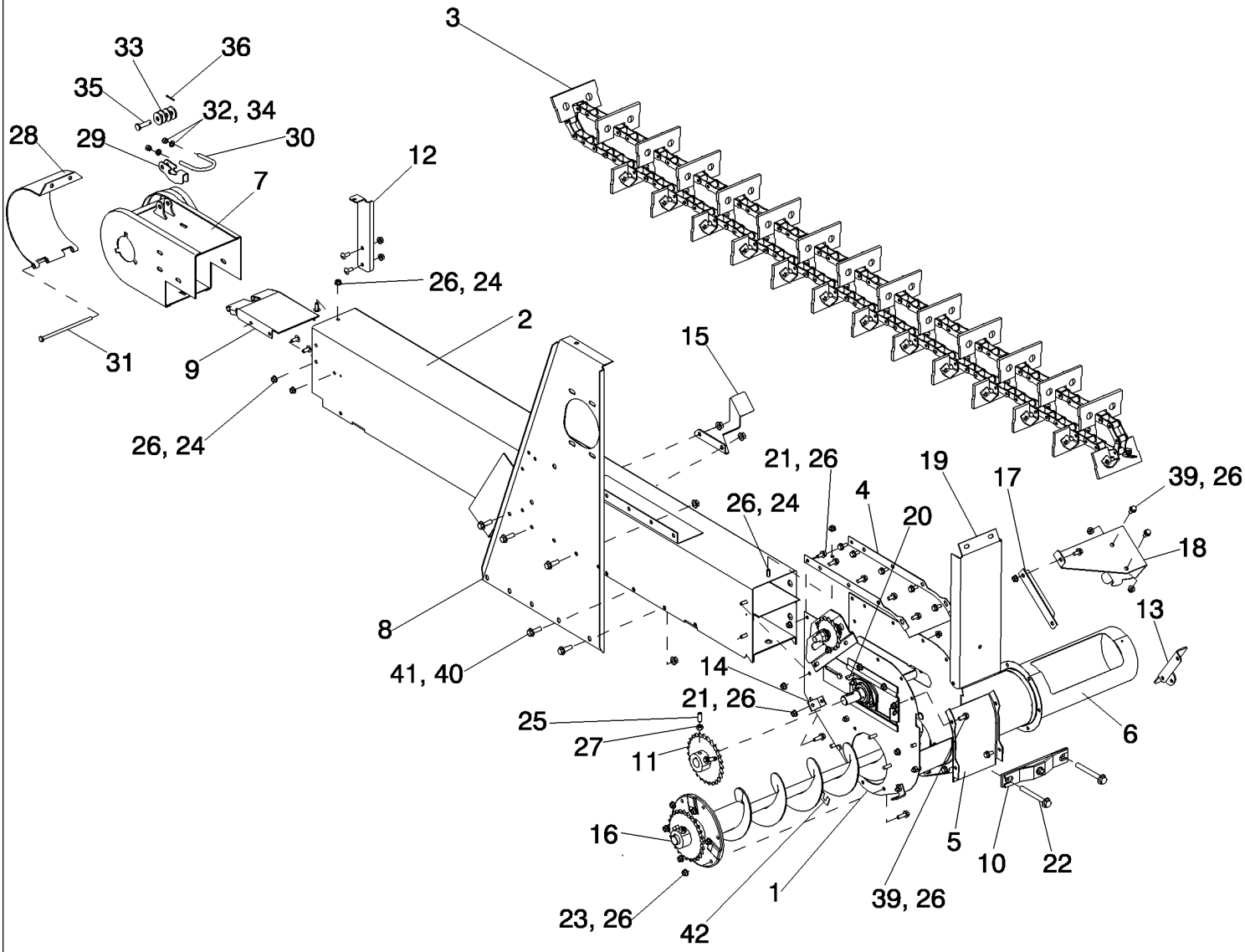

PDF created with pdfFactory trial version www.pdffactory.com

7088 AXIAL-FLOW COMBINE (EU) (4/08-)

09D-13 ELEVATOR ASSEMBLY, TAILINGS

ссылка	Номер детали	Кол-во	Описание
1	REF	1	INSTRUCTION, HEAD ASSEMBLY, Tailings Elevator, See Figure 09D-16
2	87756199	1	TUBE, Tailings Elevator
3	1312203C92	1	CHAIN (AGRICULTURE), Tailings Elevator
4	87735106	1	COVER, TOP, Tailings Elevator Head
5	87622920	1	SUPPORT, Tailings Elevator Head
6	87687117	1	TUBE, Tailings Delivery Auger
7	87622542	1	BRACKET, Tailings Elevator
8	84164209	1	BRACKET, Outer Elevator Jackshaft
9	87622917	1	END, False Bottom
10	87622547	1	BRACKET, Tightener Bolt
11	84160043	1	SPROCKET ASSY., Elevator Drive
12	87657116	1	BRACKET, Latch
13	87707059	1	SUPPORT, Upper Shield
14	142478A2	1	BRACKET, Chain Shield Tailings Elevator
15	87685994	1	BRACKET, Shield
16	REF	1	INSTRUCTION, AUGER, Delivery, Tailings, See Figure 09D-17
17	87707064	1	ANGLE, Right Hand Shield Support
18	87703137	1	SUPPORT, Upper
19	87609175	1	SUPPORT, Tailings Elevator, Upper
20	126-124	1	KEY, WOODRUFF, #15, 1/4" x 1", HT,
21	87681207	15	BOLT,
22	9837937	2	BOLT, Hex, M12 x 100, 8.8, Full Thd,
23	87698833	4	BOLT,
24	847-3820	14	SCREW, Sltd Tr Hd, M8 x 20, 10.9, Serr,
25	300484	2	
26	86507066	46	NUT, M8 x 1.25, Flg, Cl 10,
27	100016	2	NUT, M10, Cl 8,
28	87622926	1	DOOR, Elevator Boot
29	86581559	1	HANDLE,
30	84989315	1	U-BOLT, M8,
31	16046531	1	BOLT,
32	86629542	3	NUT, LOCK, M8 x 1.25, Cl 8,
33	86624176	7	WASHER, M10 x 20 x 2,
34	86624184	2	WASHER, M8 x 16 x 1.6,
35	9507095	1	PIN, CLEVIS, M10 x 40,
36	280251	1	PIN, SPLIT (COTTER), 3/32" x 1",
37	87622544	1	SUPPORT ASSY., Tightener Bolt
38	87547587	1	NUT,
39	87656137	9	BOLT, Hex Flg, M8 x 20, 10.9, Full Thd,
40	86050279	5	NUT, M10 x 1.5, Flg, Cl 10,
41	87698836	5	BOLT,

PDF created with pdfFactory trial version www.pdffactory.com

ссылка	Номер детали	Кол-во	Описание
42	151670C1	1	PLATE, LOCKING,

PDF created with pdfFactory trial version www.pdffactory.com

09D-14 DRIVE ASSEMBLY, ELEVATOR JACKSHAFT

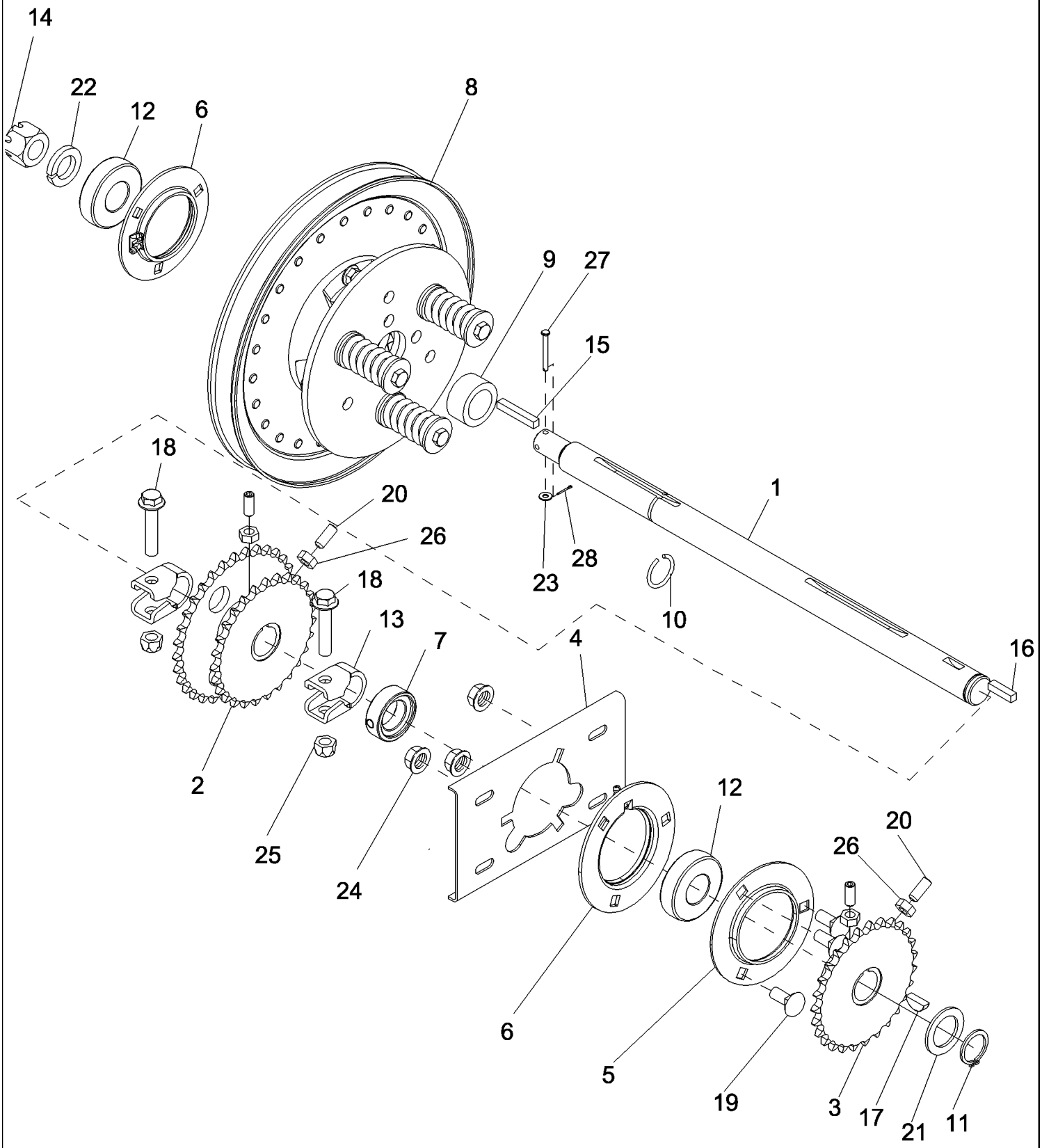

PDF created with pdfFactory trial version www.pdffactory.com

7088 AXIAL-FLOW COMBINE (EU) (4/08-)

09D-14 DRIVE ASSEMBLY, ELEVATOR JACKSHAFT

ссылка	Номер детали	Кол-во	Описание
1	87472290	1	JACKSHAFT, Elevator Drive
2	87730056	1	SPROCKET, Elevator Drive
3	87737142	1	SPROCKET, Elevator Drive
4	192138C2	1	BRACKET, Elevator Jackshaft Outer Support
5	36403	1	FLANGE,
6	87430561	2	FLANGE, With Lube Fitting, Jackshaft Bearing
7	87431214	1	COLLAR, Lock
8	REF	1	INSTRUCTION, CLUTCH, Elevator Jackshaft, See Figure 09D-15
9	87679416	1	SPACER, Elevator Jackshaft
10	1319235C1	1	RING, Elevator Jackshaft
11	100-16125	1	RING, SNAP, #125, Ext,
12	473097R92	2	BEARING, BALL,
13	225265R1	2	CLAMP, Tie Rod
14	11693821	1	NUT, SLOTTED,
15	586879R1	1	KEY,
16	581306R1	1	KEY, 5/16" Sq x 1 1/4", Par,
17	126-125	1	KEY, WOODRUFF, #B, 5/16" x 1", HT,
18	87301277	2	BOLT,
19	87682391	3	BOLT, Short NK, M10 x 25, Cl 10.9,
20	300483	4	SET SCREW, Hex Soc, M10 x 25, Cup Pt,
21	495-81211	1	WASHER, 1 11/32" x 2" x .120",
22	492-11100	1	WASHER, LOCK, 1",
23	495-31022	1	WASHER, #10,
24	86050279	3	NUT, M10 x 1.5, Flg, Cl 10,
25	86512497	2	NUT, M12 x 1.75, Flg, Cl 10,
26	84807411	4	NUT, Thin, M10 x 1.5, Cl 04,
27	427-3175	1	PIN, CLEVIS, 3/16" x 1 3/4",
28	432-48	1	PIN, SPLIT (COTTER), 1/16" x 1/2",

PDF created with pdfFactory trial version www.pdffactory.com

09D-15 CLUTCH ASSEMBLY, ELEVATOR JACKSHAFT

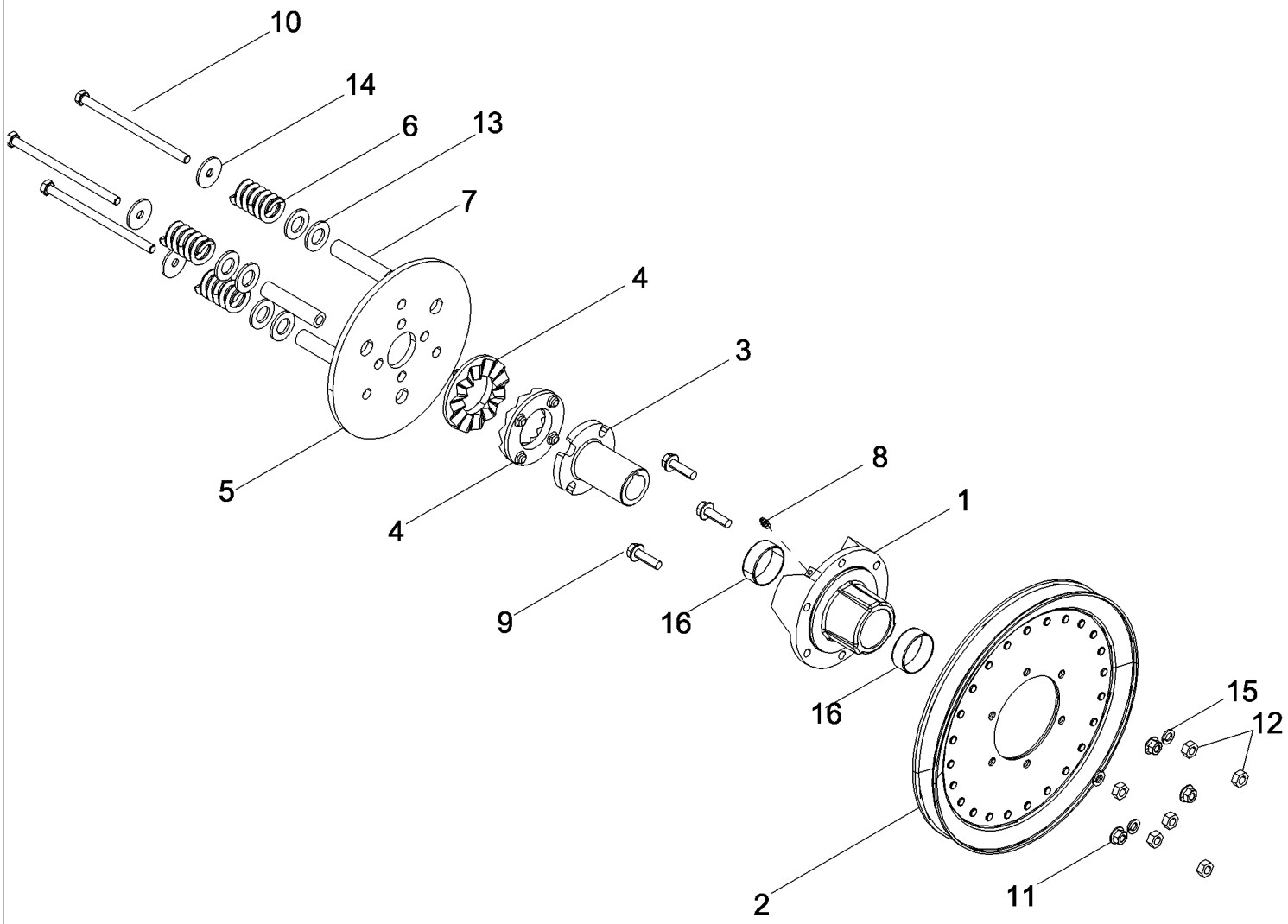

PDF created with pdfFactory trial version www.pdffactory.com

7088 AXIAL-FLOW COMBINE (EU) (4/08-)

09D-15 CLUTCH ASSEMBLY, ELEVATOR JACKSHAFT

ссылка	Номер детали	Кол-во	Описание
1	183210C91	1	HUB, Elevator Jackshaft
2	87757837	1	PULLEY, Elevator Jackshaft
3	198279A1	1	HUB, Elevator Ratchet Clutch
4	168370C2	2	CLUTCH, PLATE, Slip Ratchet
5	194835C2	1	RETAINER, Clutch Ratchet
6	87527502	3	SPRING, Elevator Clutch
7	186916C2	3	BUSHING, Elevator Jackshaft
8	219-87	1	NIPPLE, LUBE, 1/4"-28 x .56" lg, Self-Tap,
9	87698838	3	BOLT,
10	814-10170	3	BOLT, Hex, M10 x 170, 8.8,
11	87547587	3	NUT,
12	86512554	6	NUT, LOCK, M10 x 1.5, Cl 10,
13	495-11081	6	WASHER, 3/4", SAE,
14	87024930	3	WASHER, M10 x 50 x 3 Thk, HT,
15	140028	3	WASHER, LOCK, M10,
16	936744R1	2	BUSHING, Prop Post Pivot

PDF created with pdfFactory trial version www.pdffactory.com

09D-16 HEAD ASSEMBLY, TAILINGS ELEVATOR

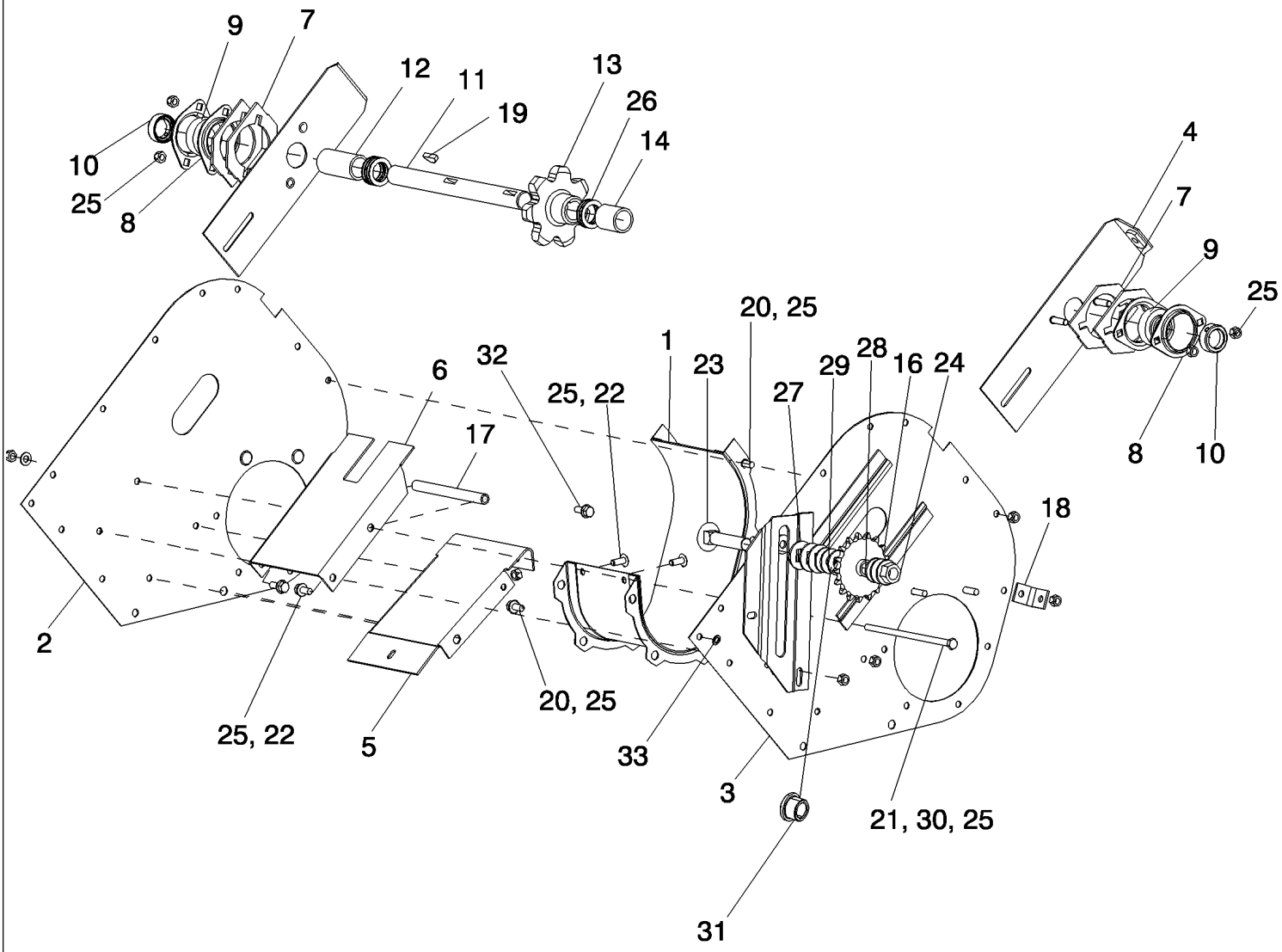

PDF created with pdfFactory trial version www.pdffactory.com

7088 AXIAL-FLOW COMBINE (EU) (4/08-)

09D-16 HEAD ASSEMBLY, TAILINGS ELEVATOR

ссылка	Номер детали	Кол-во	Описание
1	87622913	1	TROUGH, Elevator Head
2	87620241	1	PLATE ASSY., Head, Tailings, Left Hand
3	87620236	1	PLATE ASSY., Head, Tailings, Right Hand
4	87622915	2	SUPPORT ASSY., Head Shaft
5	87736713	1	COVER, TOP, Tailings Elevator Head
6	87622916	1	BOTTOM, Tailings Elevator Head
7	87624305	4	PLATE, LARGE, Spacer
8	50591	4	FLANGE, Bearing
9	214366C91	2	BEARING, BALL, Clean Grain Delivery Auger
10	87431217	2	COLLAR, Bearing Lock
11	87515814	1	SHAFT, Tailings Elevator
12	516327R1	1	SPACER, 1" Pipe x 2 3/4", Tailings Elevator Shaft
13	87691619	1	SPROCKET, 7T, Headshaft, Tailings
14	87036418	1	SPACER, 1" Pipe x 1 9/16", Tailings Elevator Shaft
15	87622836	1	BRACKET, Elevator Chain Tightener
16	87283101	1	SPROCKET, Main
17	87302565	1	SPACER, Tailings Elevator Head
18	142478A2	1	BRACKET, Chain Shield Tailings Elevator
19	126-124	1	KEY, WOODRUFF, #15, 1/4" x 1", HT, Tailings Elevator Shaft
20	87681207	6	BOLT,
21	87690472	2	BOLT,
22	847-3820	4	SCREW, Sltd Tr Hd, M8 x 20, 10.9, Serr,
23	711-16080	1	BOLT, CARRIAGE, M16 x 80, 8.8,
24	86512498	1	NUT, M16 x 2, Flg, Cl 10,
25	86629542	16	NUT, LOCK, M8 x 1.25, Cl 8,
26	495-81069	7	WASHER, 1 1/32" x 1 1/2" x .060",
27	498-81010	3	WASHER, 41/64" x 1 1/2" x .105", Sq Hole,
28	140048	1	WASHER, SPRING, Belleville, M16,
29	495-11066	3	WASHER, 5/8", SAE,
30	495-11034	2	WASHER, 5/16", SAE,
31	84334697	1	BUSHING,
32	87656137	3	BOLT, Hex Flg, M8 x 20, 10.9, Full Thd,
33	495-81135	3	WASHER, 13/32" x 1" x .120",

PDF created with pdfFactory trial version www.pdffactory.com

7088 AXIAL-FLOW COMBINE (EU) (4/08-)

09D-17 AUGER ASSEMBLY, DELIVERY, TAILINGS

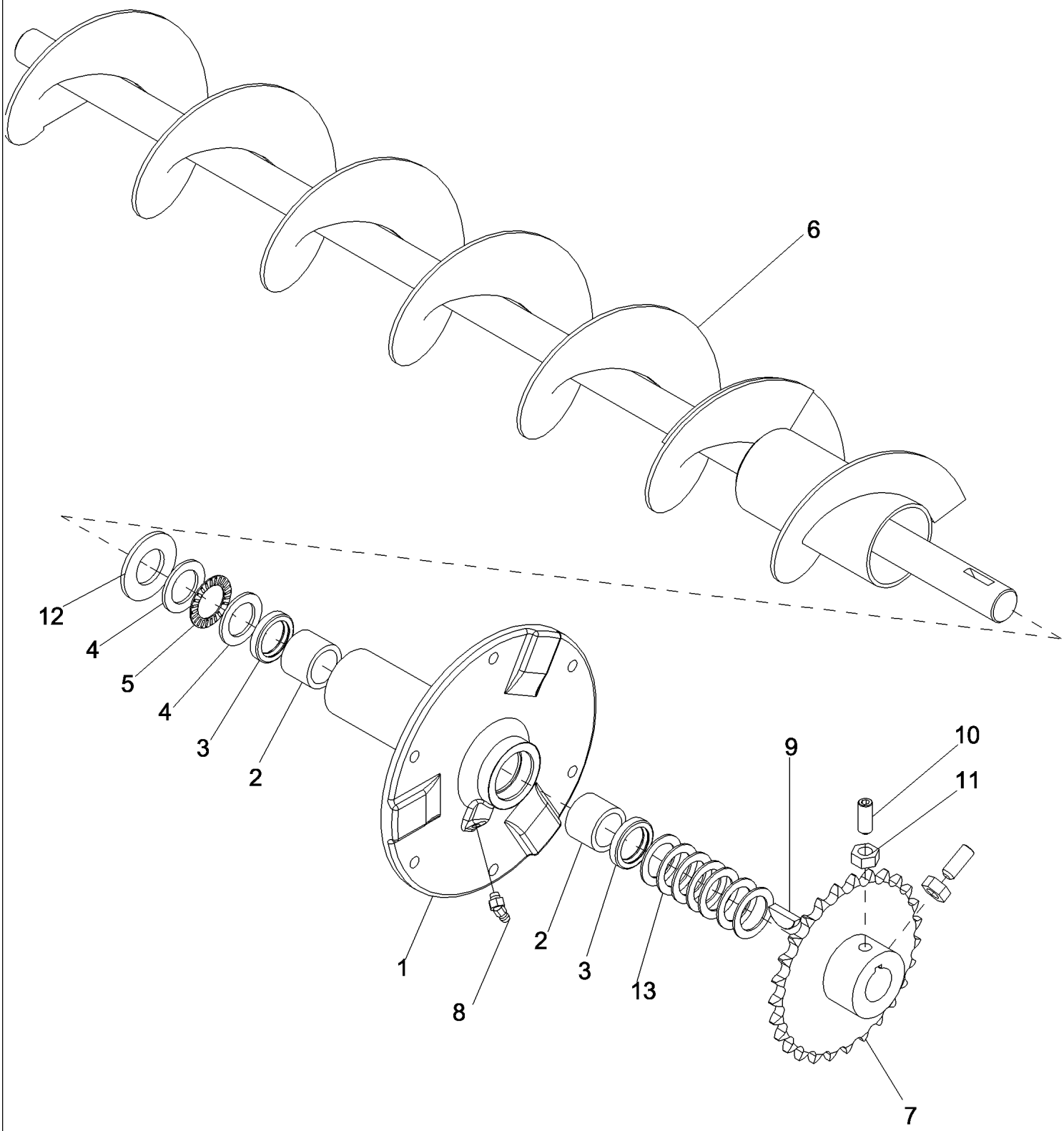

PDF created with pdfFactory trial version www.pdffactory.com

7088 AXIAL-FLOW COMBINE (EU) (4/08-)

09D-17 AUGER ASSEMBLY, DELIVERY, TAILINGS

ссылка	Номер детали	Кол-во	Описание
1	87692304	1	HUB, Tailings Delivery Auger Bearing
2	574940R91	2	BEARING, NEEDLE,
3	564592R91	2	SEAL,
4	864982R1	2	WASHER, Bearing Race Needle Thrust
5	1324864C91	1	BEARING, Needle, Thrust
6	87379140	1	AUGER, Tailings Delivery
7	87622420	1	SPROCKET ASSY., Elevator Drive
8	219-90	1	NIPPLE, LUBE, 45є, 1/4" NPT x .80" lg, Drive,
9	126-124	1	KEY, WOODRUFF, #15, 1/4" x 1", HT,
10	300483	2	SET SCREW, Hex Soc, M10 x 25, Cup Pt,
11	84807411	2	NUT, Thin, M10 x 1.5, Cl 04,
12	495-11106	1	WASHER, 1", SAE,
13	495-81069	7	WASHER, 1 1/32" x 1 1/2" x .060",

PDF created with pdfFactory trial version www.pdffactory.com

09D-18 NON-YIELD MONITOR ELEVATOR COMPLETING

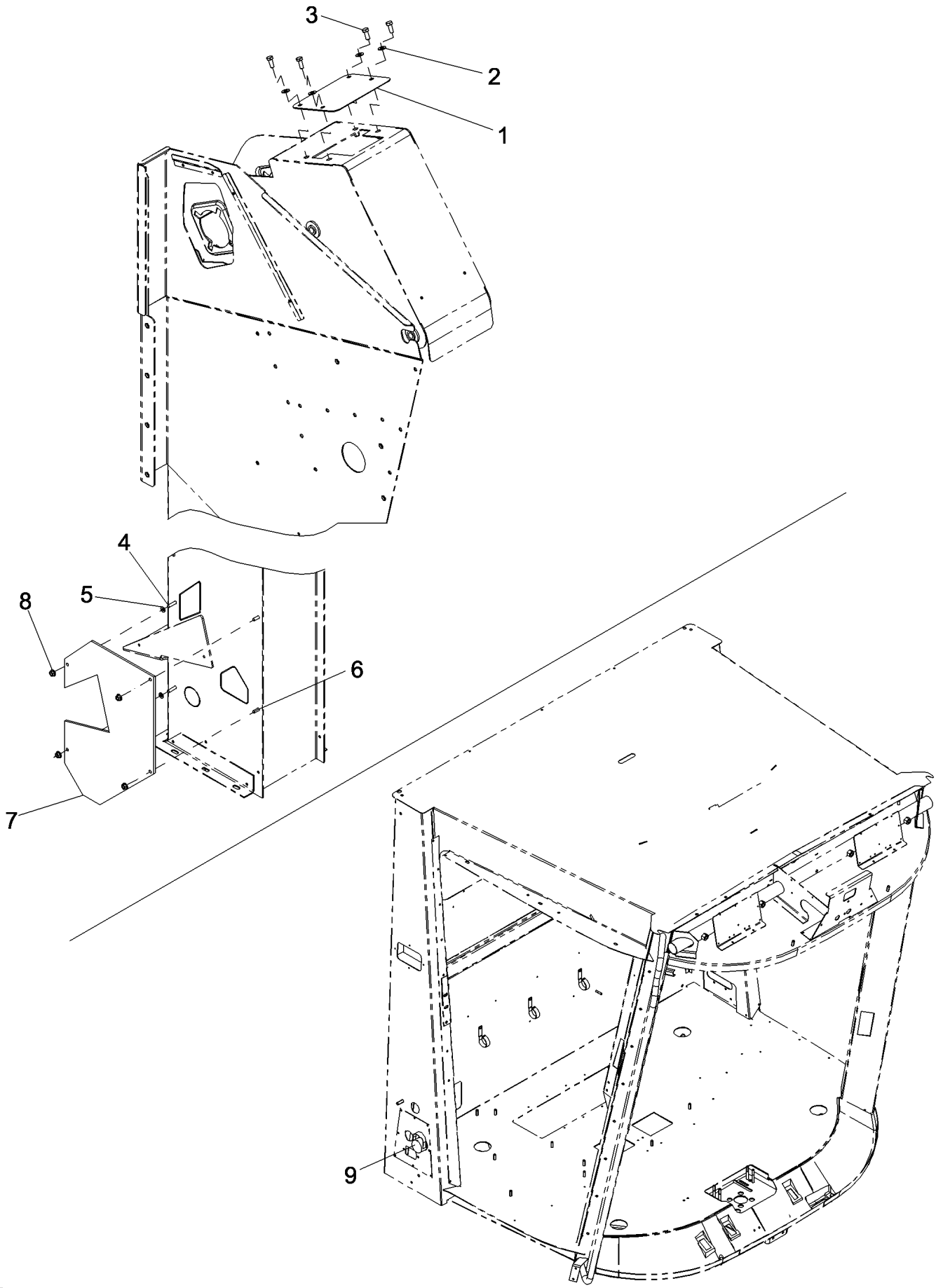

PDF created with pdfFactory trial version www.pdffactory.com

7088 AXIAL-FLOW COMBINE (EU) (4/08-)

09D-18 NON-YIELD MONITOR ELEVATOR COMPLETING

ссылка	Номер детали	Кол-во	Описание
1	87346732	1	PLATE ASSY., Elevator Head Cover
2	322358	4	WASHER, SPRING, Belleville, M8,
3	120104	4	BOLT, Hex, M8 x 20, 8.8,
4	368798A1	2	SCREW,
5	131-433	2	NUT, LOCK, Push, 1/4",
6	409-7412	2	BOLT, Hex Flg, 1/4"-20 x 3/4", Serr,
7	87331542	1	PLATE ASSY., Elevator Cover
8	231-5144	4	NUT, Flg, USR, 1/4"-20,
9	87674936	1	PLUG, Precision Farming Bulkhead

PDF created with pdfFactory trial version www.pdffactory.com

09D-19 PRECISION FARMING UPGRADE ELEVATOR SENSORS

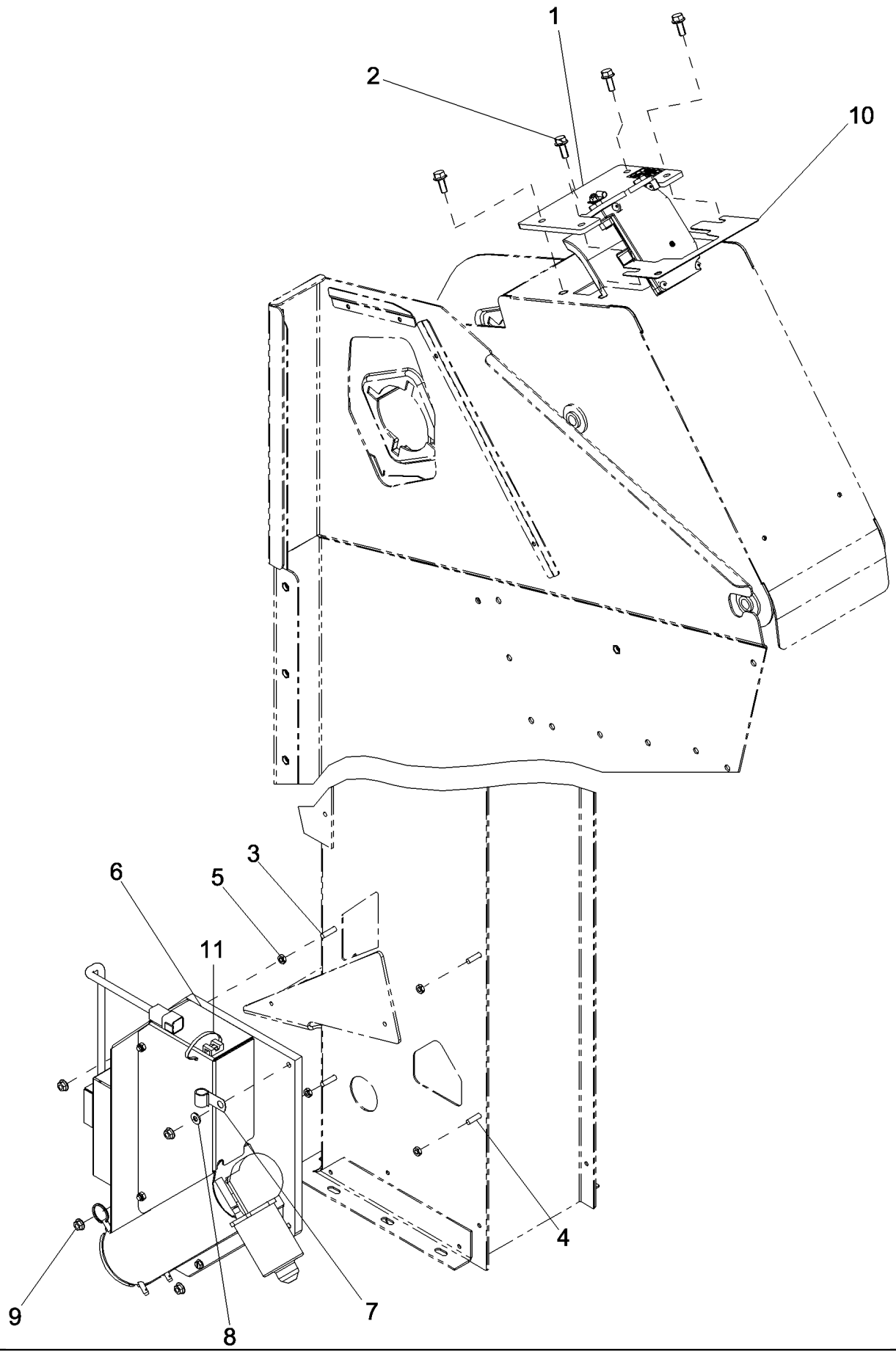

PDF created with pdfFactory trial version www.pdffactory.com

7088 AXIAL-FLOW COMBINE (EU) (4/08-)

09D-19 PRECISION FARMING UPGRADE ELEVATOR SENSORS

ссылка	Номер детали	Кол-во	Описание
1	87387778	1	SENSOR, Can Flow
2	87656137	4	BOLT, Hex Flg, M8 x 20, 10.9, Full Thd,
3	368798A1	2	SCREW,
4	409-7416	2	BOLT, Hex Flg, 1/4"-20 x 1", Serr,
5	425-144	4	NUT, Jam, 1/4"-20, G5,
6	87387779	1	SENSOR, Midrange Moist Bypass
7	516-23127	1	CLAMP, J, 9/16" Insul, 3/8" Bolt,
8	495-11028	1	WASHER, 1/4", SAE,
9	231-5144	4	NUT, Flg, USR, 1/4"-20,
10	87612334	1	RUNNER, Flow Sensor
11	473321C1	1	STRAP, CABLE, .098" x 8",

PDF created with pdfFactory trial version www.pdffactory.com

7088 AXIAL-FLOW COMBINE (EU) (4/08-)

09E-01 GRAIN TANK ASSEMBLY

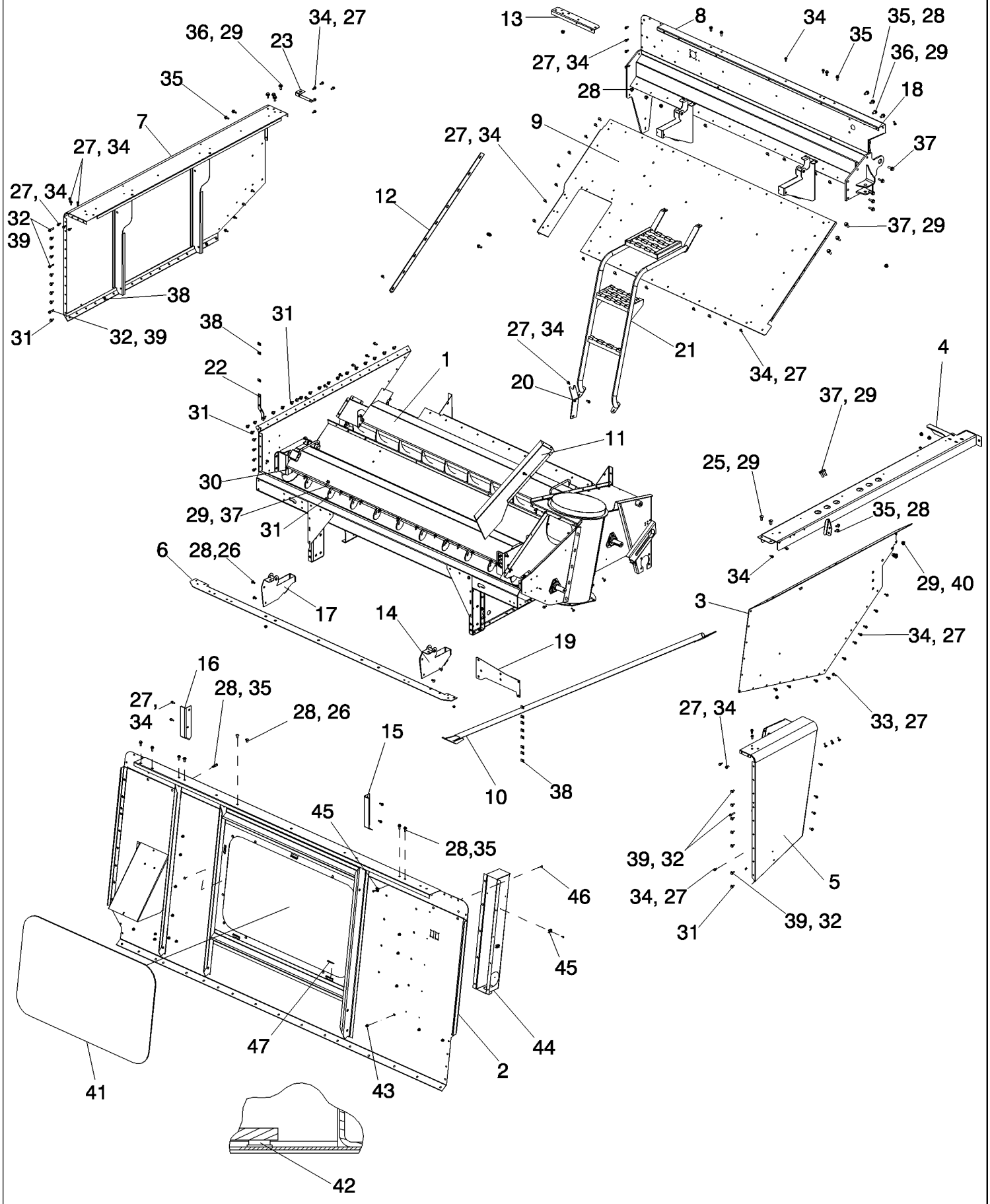

PDF created with pdfFactory trial version www.pdffactory.com

7088 AXIAL-FLOW COMBINE (EU) (4/08-)

09E-01 GRAIN TANK ASSEMBLY

ссылка	Номер детали	Кол-во	Описание
1	NSS	1	NOT SERVICED SEPARATELY, BOTTOM, Grain Tank, See Figure 09E-02
2	87654570	1	SHEET ASSY., Grain Tank, Front, Inc. 41-47
3	87550180	1	SHEET, Grain Tank, Left Hand
4	87521762	1	SUPPORT, Unloader Support
5	87654567	1	PANEL ASSY., Left Hand Front
6	84128620	1	REINFORCEMENT, Grain Tank, Front
7	87654564	1	SHEET ASSY., Grain Tank, Right Hand
8	84130497	1	PANEL ASSY., Grain Tank, Rear
9	84133915	1	FLOOR, Grain Tank, Rear
10	87527987	1	TUBE, SUPPORT, Unloader Support
11	87655039	1	CHUTE, Sample
12	87528591	1	SUPPORT, Tank Bottom Rear, Right Hand
13	87528508	1	ANGLE,
14	87617037	1	HINGE, Front Left Hand
15	87555867	1	BRACKET, Left Hand
16	87561660	1	BRACKET, Right Hand
17	87552212	1	BRACKET,
18	87552213	2	HINGE, Rear
19	87687451	1	PLATE, Tank Support, Left Hand Front
20	87718158	1	BRACKET, Bubbler Stop
21	86976398	1	LADDER, Grain Tank
22	87561755	1	REINFORCEMENT, Front Right Hand Wall
23	87757999	1	ANGLE, Grain Tank Trim Support
24	86585704	1	SCREW, Cross Pan Hd, M8 x 25,
25	87695426	2	SCREW,
26	87682390	9	BOLT,
27	86507066	116	NUT, M8 x 1.25, Flg, Cl 10,
28	86050279	24	NUT, M10 x 1.5, Flg, Cl 10,
29	86512497	21	NUT, M12 x 1.75, Flg, Cl 10,
30	87673844	15	SCREW,
31	87673845	37	SCREW,
32	87698834	6	BOLT,
33	87698833	3	BOLT,
34	87656137	119	BOLT, Hex Flg, M8 x 20, 10.9, Full Thd,
35	86705429	19	BOLT,
36	87343550	7	BOLT,
37	87695414	12	BOLT,
38	86625074	41	NUT,
39	84127180	6	BOSS, Corner Pilot
40	86585939	5	WASHER, BELLEVILLE, M13 x 32 x 3.5, HT,
41	86566851	1	GLASS, Grain Tank Front Sheet

PDF created with pdfFactory trial version www.pdffactory.com

ссылка	Номер детали	Кол-во	Описание
42	9992358	12	ELASTIC STOP, Grain Tank Front Sheet
43	87284531	17	NUT,
44	84190594	1	DUCT, AIR, Air Inlet
45	86590413	8	CLAMP,
46	445394	14	RIVET, Pop, M4.8 x 12.7,
47	87012019	4	STRIP, RUBBER, Grain Tank Front Sheet

PDF created with pdfFactory trial version www.pdffactory.com

09E-02 GRAIN TANK BOTTOM AND AUGERS

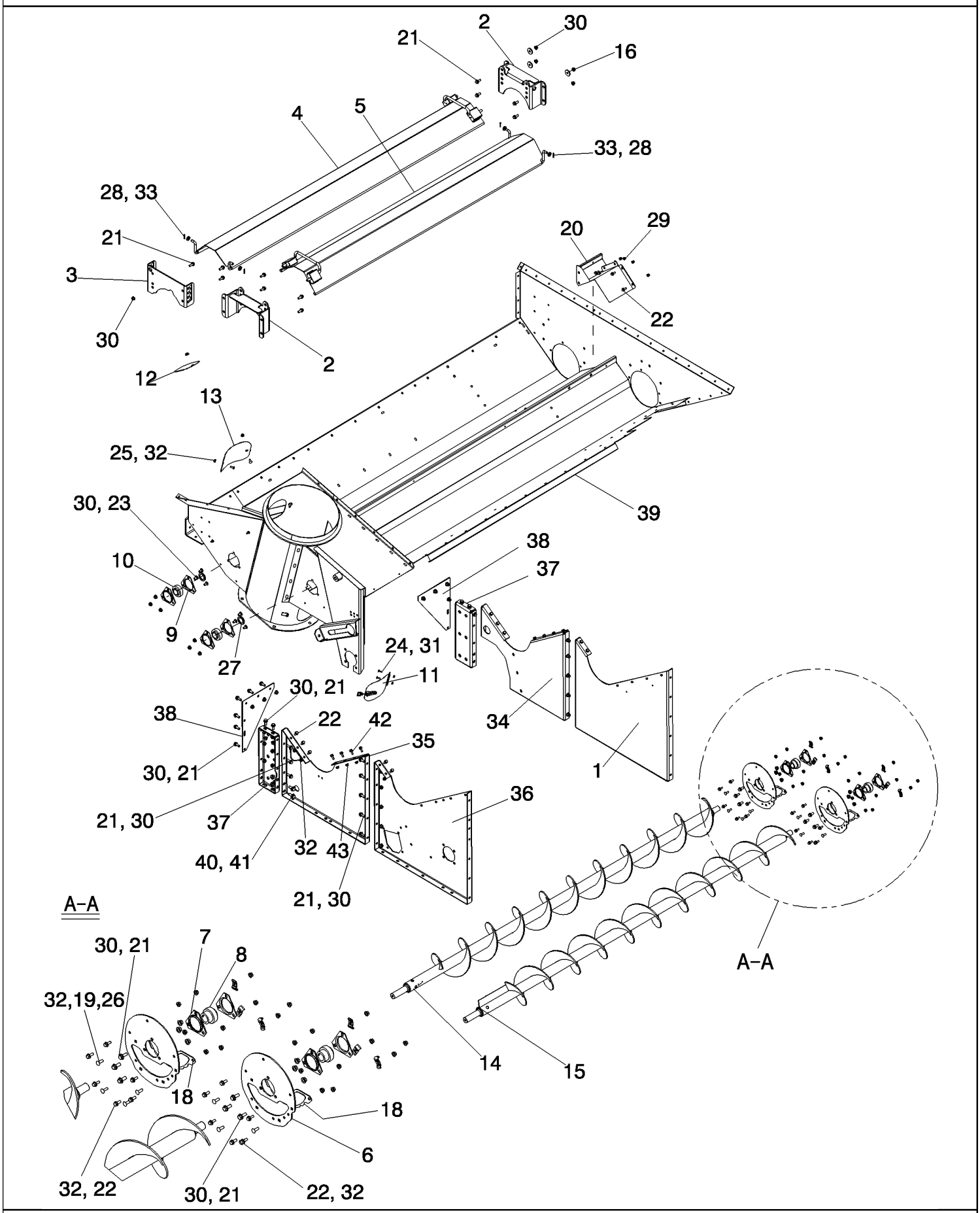

PDF created with pdfFactory trial version www.pdffactory.com

7088 AXIAL-FLOW COMBINE (EU) (4/08-)

09E-02 GRAIN TANK BOTTOM AND AUGERS

ссылка	Номер детали	Кол-во	Описание
1	87755383	1	SUPPORT, Grain Tank, Rear Right Hand
2	86975993	2	BRACKET, Support
3	86975994	1	BRACKET, Support
4	86976423	1	COVER, TOP,
5	87342517	1	COVER, Trough Auger
6	87342517	2	COVER, Grain Tank Clean Out
7	86548970	4	FLANGE, Bearing
8	87044350	2	BEARING, BALL, 30 mm Bore, 62 mm Outer Sphere
9	86620026	4	FLANGE,
10	87605592	2	BEARING, 35 mm Bore, 72 mm Outer Sphere
11	87583588	1	COVER ASSY,
12	86600691	1	COVER,
13	86597524	1	COVER,
14	84075321	1	AUGER, Front
15	84075322	1	AUGER, Rear
16	213404	3	SPACER,
18	87342513	2	COVER, Grain Tank Clean Out
19	425093	6	CLIP,
20	87564472	1	COVER, Auger Trough
21	86705429	45	BOLT,
22	87656137	42	BOLT, Hex Flg, M8 x 20, 10.9, Full Thd,
23	87682390	7	BOLT,
24	87752072	2	BOLT, CARRIAGE,
25	87682383	2	BOLT,
26	87682384	8	BOLT,
27	84075099	2	WASHER, M36 x 51 x 6 Thk,
28	86624146	4	WASHER, 17/32" x 1" x .120",
29	87284531	4	NUT,
30	86050279	46	NUT, M10 x 1.5, Flg, Cl 10,
31	86050300	2	NUT, M6 x 1, Flg, Cl10,
32	86507066	38	NUT, M8 x 1.25, Flg, Cl 10,
33	130004	4	PIN, SPLIT (COTTER), M3.2 x 25,
34	87755381	1	SUPPORT, Grain Tank Center, Right Hand
35	87755368	1	SUPPORT, Grain Tank Center, Left Hand
36	87755376	1	SUPPORT, Grain Tank Rear, Left Hand
37	87548929	2	SUPPORT, Lifting Eye
38	87548907	2	GUSSET, Grain Tank Front
39	87520855	1	TANK, Bottom
40	87343550	2	BOLT,
41	86512497	2	NUT, M12 x 1.75, Flg, Cl 10,
42	87673845	12	SCREW,

PDF created with pdfFactory trial version www.pdffactory.com

ссылка	Номер детали	Кол-во	Описание
43	86625074	12	NUT,

PDF created with pdfFactory trial version www.pdffactory.com

09E-03 GRAIN TANK SUPPORTS

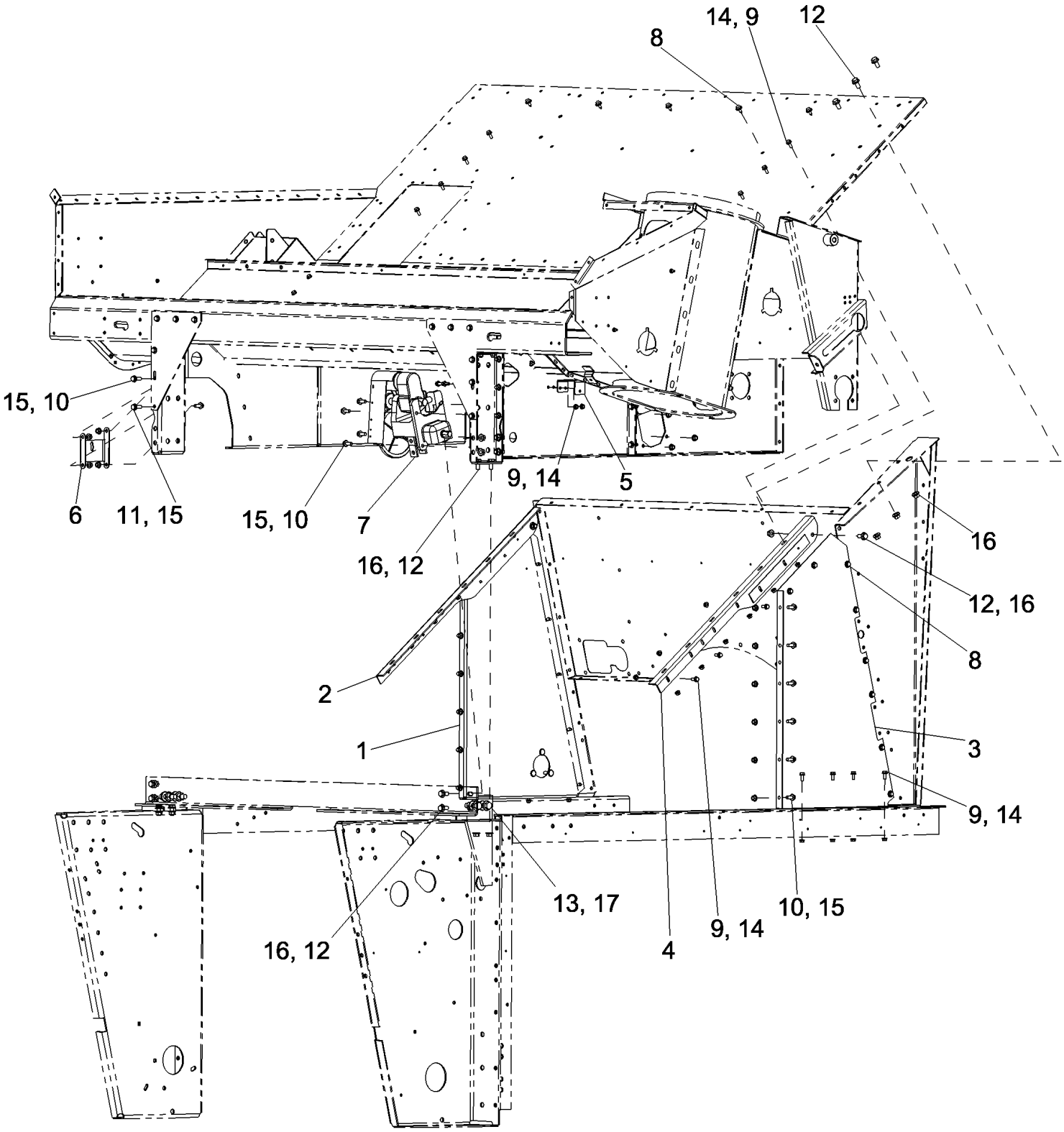

PDF created with pdfFactory trial version www.pdffactory.com

7088 AXIAL-FLOW COMBINE (EU) (4/08-)

09E-03 GRAIN TANK SUPPORTS

ссылка	Номер детали	Кол-во	Описание
1	84131448	1	SUPPORT ASSY., Elevator Jackshaft Inner
2	84131457	1	ANGLE, Grain Tank Rear, Right Hand
3	84131451	1	SUPPORT, Grain Tank Rear, Left Hand
4	84131453	1	ANGLE, Grain Tank Rear, Left Hand
5	87685426	1	BRACKET, Clamp
6	87599230	1	SUPPORT, Feeder Belt Guide Rod
7	195035A1	1	Control Assembly, See Figure 09E-04
8	87673844	20	SCREW,
9	87656137	28	BOLT, Hex Flg, M8 x 20, 10.9, Full Thd,
10	86705429	17	BOLT,
11	87698837	3	BOLT,
12	87343550	13	BOLT,
13	87698849	4	BOLT,
14	86507066	28	NUT, M8 x 1.25, Flg, Cl 10,
15	86050279	20	NUT, M10 x 1.5, Flg, Cl 10,
16	86512497	13	NUT, M12 x 1.75, Flg, Cl 10,
17	86512498	4	NUT, M16 x 2, Flg, Cl 10,

PDF created with pdfFactory trial version www.pdffactory.com

09E-04 CONCAVE CONTROL ASSEMBLY

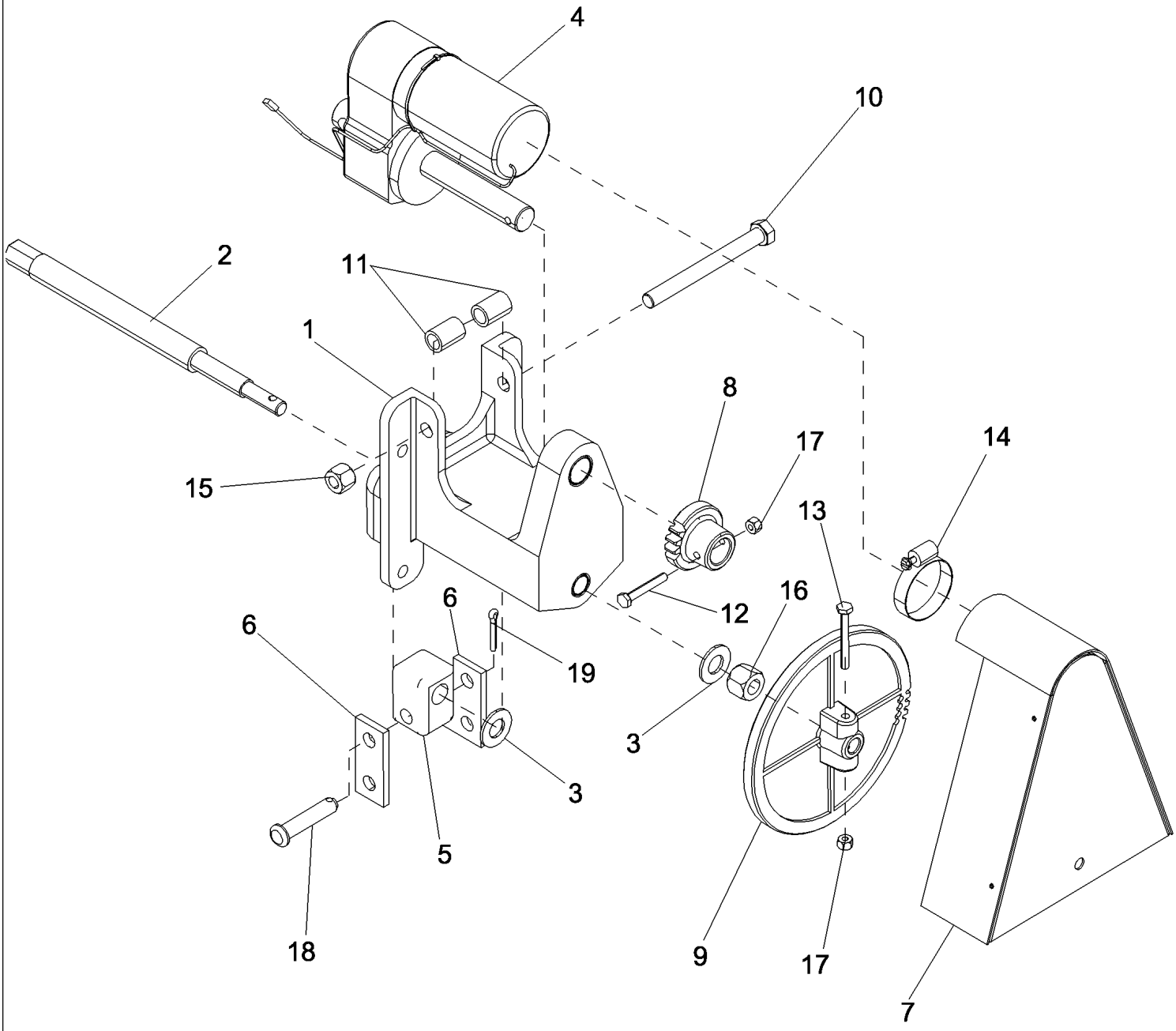

PDF created with pdfFactory trial version www.pdffactory.com

7088 AXIAL-FLOW COMBINE (EU) (4/08-)

09E-04 CONCAVE CONTROL ASSEMBLY

ссылка	Номер детали	Кол-во	Описание
1	142607A2	1	HOUSING, Concave Control, Electric
2	131436A2	1	SHAFT, Concave Control, Electric
3	496-11066	2	WASHER, 21/32" x 1 5/16" x .095", HDN,
4	143239A2	1	MOTOR, ELECTRIC, Concave Control
5	192886C1	1	NUT, Concave Control Adjusting
6	192888C1	2	PLATE, Concave Control Upper
7	144528A1	1	SHIELD, Concave Control
8	135406A2	1	GEAR, 20T, Auto Concave Control
9	135410A2	1	GEAR, 70T, Auto Concave Control
10	413-880	1	BOLT, Hex, 1/2"-13 x 5", G5,
11	87036416	2	SPACER, 3/4" Pipe x 1 1/16",
12	413-428	1	BOLT, Hex, 1/4"-20 x 1 3/4", G5,
13	413-436	1	BOLT, Hex, 1/4"-20 x 2 1/4", G5,
14	214-1540	1	CLAMP, HOSE, #40, 2.06/3.00 Type F Worm, W/liner,
15	231-1448	1	NUT, 1/2"-13, GB,
16	232-41110	1	NUT, LOCK, 5/8"-11, GC,
17	230-4214	2	NUT, LOCK, 1/4"-20, GA,
18	439-1838	1	PIN, HEADED, 1/2" x 2 3/8",
19	432-1216	1	PIN, SPLIT (COTTER), 3/16" x 1",

PDF created with pdfFactory trial version www.pdffactory.com

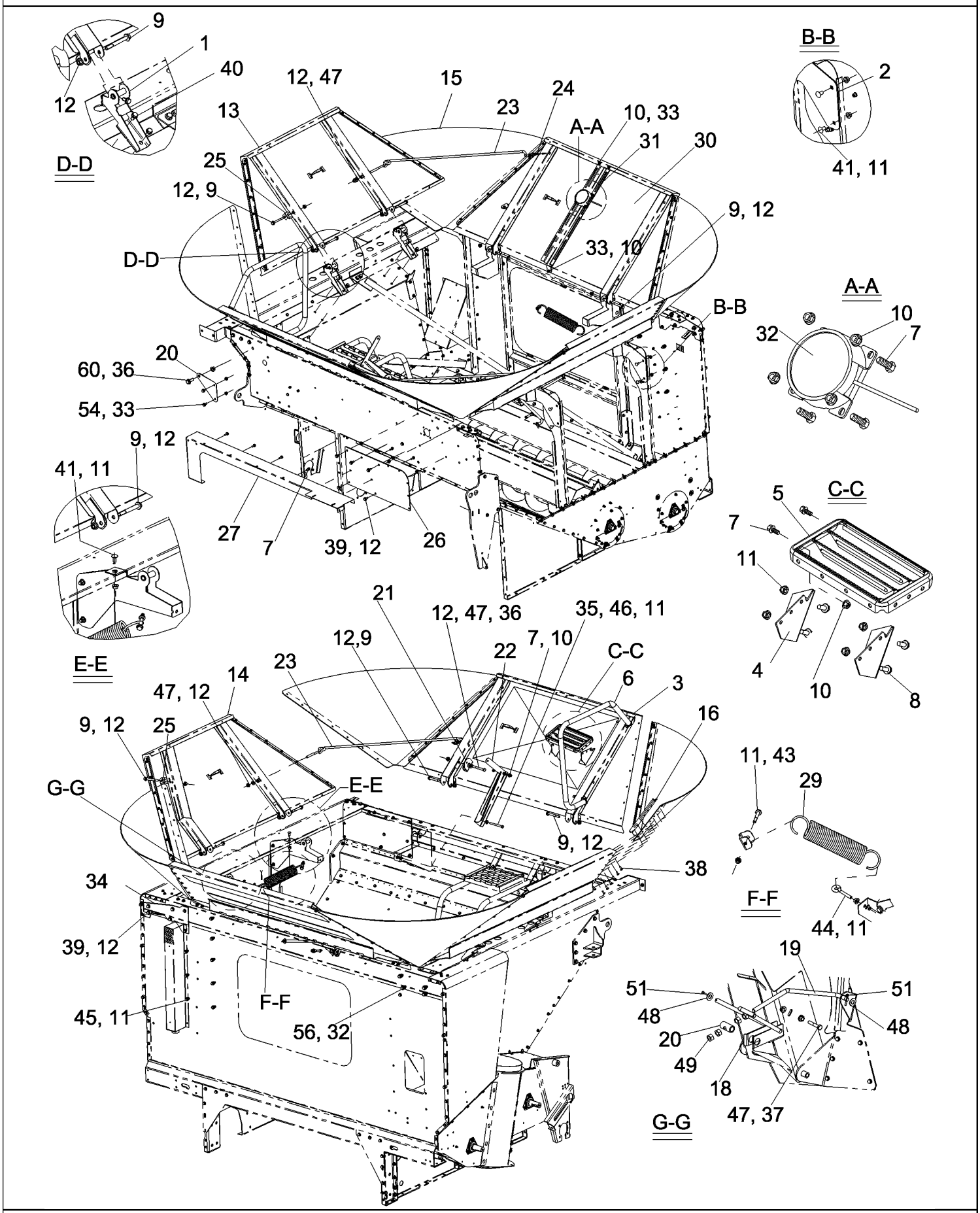

PDF created with pdfFactory trial version www.pdffactory.com

7088 AXIAL-FLOW COMBINE (EU) (4/08-)

09E-06 EXTENSIONS, GRAIN BIN, 300 BU, 6088,7088

ссылка	Номер детали	Кол-во	Описание
1	87606500	2	HINGE, Left Hand
2	87474228	2	HINGE, Right Hand
3	87735049	1	EXTENSION ASSY., Rear, 32 Inch
4	87609690	2	BRACKET, Step, Extension
5	1531337C1	1	STEP,
6	87648705	1	HANDLE, Grab
7	87656137	15	BOLT, Hex Flg, M8 x 20, 10.9, Full Thd,
8	86705429	4	BOLT,
9	87032825	12	BOLT, Hex Flg, M12 x 100, 10.9,
10	86507066	12	NUT, M8 x 1.25, Flg, Cl 10,
11	86050279	27	NUT, M10 x 1.5, Flg, Cl 10,
12	86512497	28	NUT, M12 x 1.75, Flg, Cl 10,
13	87735046	1	EXTENSION ASSY., Left Hand, 32 Inch
14	87735044	1	EXTENSION ASSY., Right Hand, 32 Inch
15	87726836	4	CANVAS, Extension Corner, 32 Inch
16	87735041	8	ANGLE, Extension, 32 Inch
17	86995792	4	PAD,
18	87571909	1	ASSEMBLY, Handle Latch, Bubbler
19	87656571	1	ROD, Latch, Bubbler Auger
20	87571967	1	BUSHING, Latch, Bubbler Auger
21	87107781	1	BRACKET,
22	87608564	1	BRACKET, Extension Panel
23	87553944	2	ROD, Prop, Grain Tank Extension
24	87106279	2	PIN,
25	86976901	2	CLIP, Prop Rod
26	87603123	1	SUPPORT, Tank Support, No Cover
27	87649428	1	COVER ASSY, No Actuator
28	87614100	1	COVER, Tank Extension, Left Hand Rear
29	86975571	1	SPRING,
30	87721662	1	EXTENSION ASSY., Front, 32 Inch
31	87685904	1	BRACKET, Bin Level Sensor, 32 Inch
32	87701176	1	SWITCH, Grain Bin
33	86507486	3	BOLT, CARRIAGE, Short NK, M8 x 20, Cl8.8, Full Thd,
34	87685990	1	PLATE, Tank Support, Right Hand Front
35	120117	1	BOLT, Hex, M10 x 110, 8.8, Full Thd,
36	86508622	1	BOLT, Hex, M12 x 100, 10.9,
37	9706717	1	BOLT, Hex, M12 x 70, 8.8, Full Thd,
38	86975890	56	SCREW, Torx Hd, M8 x 1.25 x 20,
39	87030508	11	BOLT, Hex Flg, M12 x 30, 10.9, Full Thd,
40	87698835	8	BOLT,
41	120041	6	BOLT, CARRIAGE, Short NK, M10 x 20, Cl8.8, Full Thd,

PDF created with pdfFactory trial version www.pdffactory.com

ссылка	Номер детали	Кол-во	Описание
42	86978772	1	BOLT,
43	87698841	1	BOLT,
44	86599359	1	EYEBOLT,
45	86705429	10	BOLT,
46	378244	1	WASHER, M10 x 24 x 2 Thk,
47	140046	3	WASHER, SPRING, Belleville, M12,
48	140048	2	WASHER, SPRING, Belleville, M16,
49	100020	4	NUT, M16, Cl 8,
50	86512498	1	NUT, M16 x 2, Flg, Cl 10,
51	9515820	2	PIN, SPLIT (COTTER), M6.3 x 40,

PDF created with pdfFactory trial version www.pdffactory.com

09E-07 COVER, ACCESS, GRAIN TANK

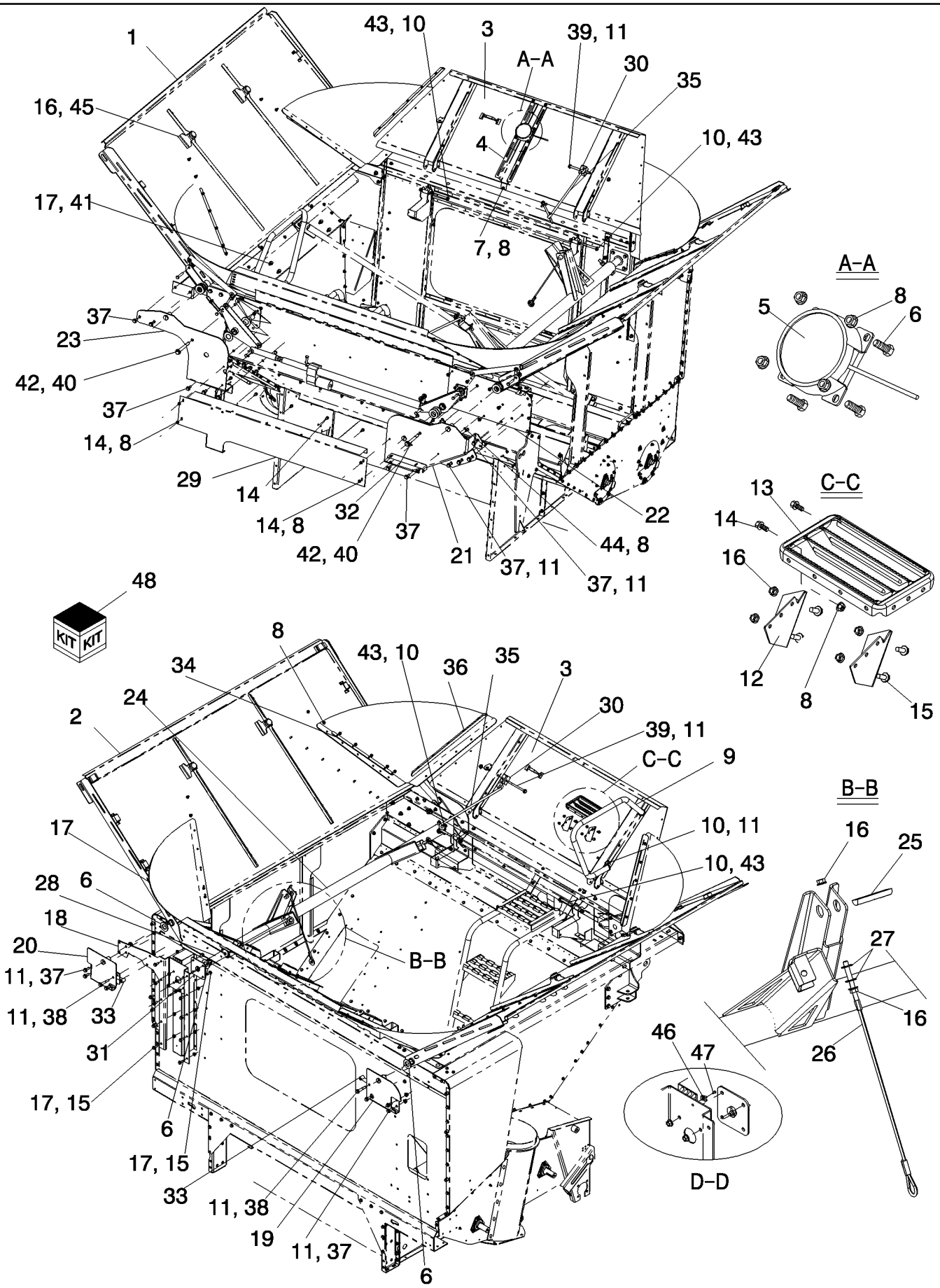

PDF created with pdfFactory trial version www.pdffactory.com

7088 AXIAL-FLOW COMBINE (EU) (4/08-)

09E-07 COVER, ACCESS, GRAIN TANK

ссылка	Номер детали	Кол-во	Описание
1	87556613	1	COVER ASSY, Access, Grain Tank, Left Hand
2	87556597	1	COVER ASSY, Access, Grain Tank, Right Hand
3	87554394	2	EXTENSION ASSY., Front And Rear, 24 Inch, 250 Bushel Grain Tank
3	87721662	1	EXTENSION ASSY., Front, 32 Inch, 300 Bushel Grain Tank
3	87735049	1	EXTENSION ASSY., Rear, 32 Inch, 300 Bushel Grain Tank
4	87756703	1	BRACKET, Tank Level Sensor, 24 Inch, 250 Bushel Grain Tank
4	87685904	1	BRACKET, Tank Level Sensor, 32 Inch, 300 Bushel Grain Tank
5	87701176	1	SWITCH, Grain Tank Level
6	87656137	7	BOLT, Hex Flg, M8 x 20, 10.9, Full Thd,
7	87682383	3	BOLT,
8	86507066	45	NUT, M8 x 1.25, Flg, Cl 10,
9	87548619	1	HANDLE, Grab, 250 Bushel Grain Tank
9	87648705	1	HANDLE, Grab, 300 Bushel Grain Tank
10	87032825	6	BOLT, Hex Flg, M12 x 100, 10.9,
11	86512497	16	NUT, M12 x 1.75, Flg, Cl 10,
12	87609690	2	BRACKET, Step, Extension, 300 Bushel Grain Tank
13	1531337C1	1	STEP, 300 Bushel Grain Tank
14	87656137	12	BOLT, Hex Flg, M8 x 20, 10.9, Full Thd,
15	86705429	18	BOLT,
16	86050279	26	NUT, M10 x 1.5, Flg, Cl 10,
17	87734459	4	CANVAS, Extension Corner, 24 Inch, 250 Bushel Grain Tank
17	87726836	4	CANVAS, Extension Corner, 32 Inch, 300 Bushel Grain Tank
18	87727327	1	BRACKET, Rockshaft, Front
19	87727126	1	BRACKET, Tank Cover, Left Hand Front
20	87727129	1	BRACKET, Tank Cover, Right Hand Front
21	87619952	1	BRACKET, Tank Cover, Right Hand Rear
22	87727319	1	SUPPORT ASSY., Tank Cover, Right Hand Rear
23	87619953	1	BRACKET, Tank Cover, Left Hand Rear
24	87726833	1	ROD ASSY., Rockshaft, Tank Cover
25	87694660	1	BAR, Cable, Bubbler Linkage
26	87740261	1	CABLE ASSY., Bubbler Auger Lifting
27	86625253	2	WASHER, M11 x 24 x 2,
28	87726831	1	TUBE, End, Front, With Bearing
29	87579334	1	COVER ASSY, Access, Actuator
30	87631786	2	CHANNEL, Wear
31	87631278	1	PLATE ASSY., Rockshaft Retaining
32	87643551	1	CHANNEL, Baffle Cover
33	87686085	2	SPACER, Front Stopper
34	87740262	4	STRAP, Corner, 250 Bushel Grain Tank
34	87727124	4	STRAP, Corner, 300 Bushel Grain Tank
35	87679667	2	ROD, Linkage, Extension

PDF created with pdfFactory trial version www.pdffactory.com

ссылка	Номер детали	Кол-во	Описание
36	84194670	4	ANGLE, 250 Bushel Grain Tank
36	87735041	4	ANGLE, 300 Bushel Grain Tank
37	87030508	17	BOLT, Hex Flg, M12 x 30, 10.9, Full Thd,
38	87698845	2	BOLT,
39	87030021	2	BOLT, Hex Flg, M12 x 150, 10.9,
40	87028052	2	BOLT,
41	87698835	6	BOLT,
42	86512498	2	NUT, M16 x 2, Flg, Cl 10,
43	87681209	4	NUT,
44	86585704	2	SCREW, Cross Pan Hd, M8 x 25,
45	190029	2	INSULATOR BLOCK,
46	86590413	1	CLAMP,
47	445394	1	RIVET, Pop, M4.8 x 12.7,
48	84189900	1	KIT, SERVICE, DIA, Cover, Access, Grain Bin

PDF created with pdfFactory trial version www.pdffactory.com

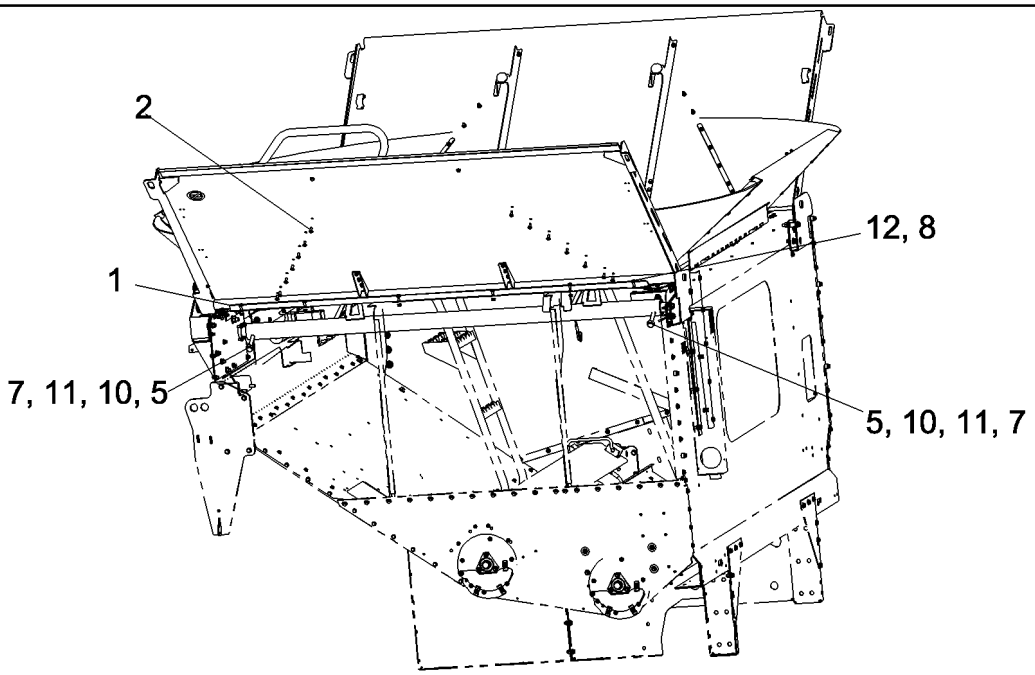

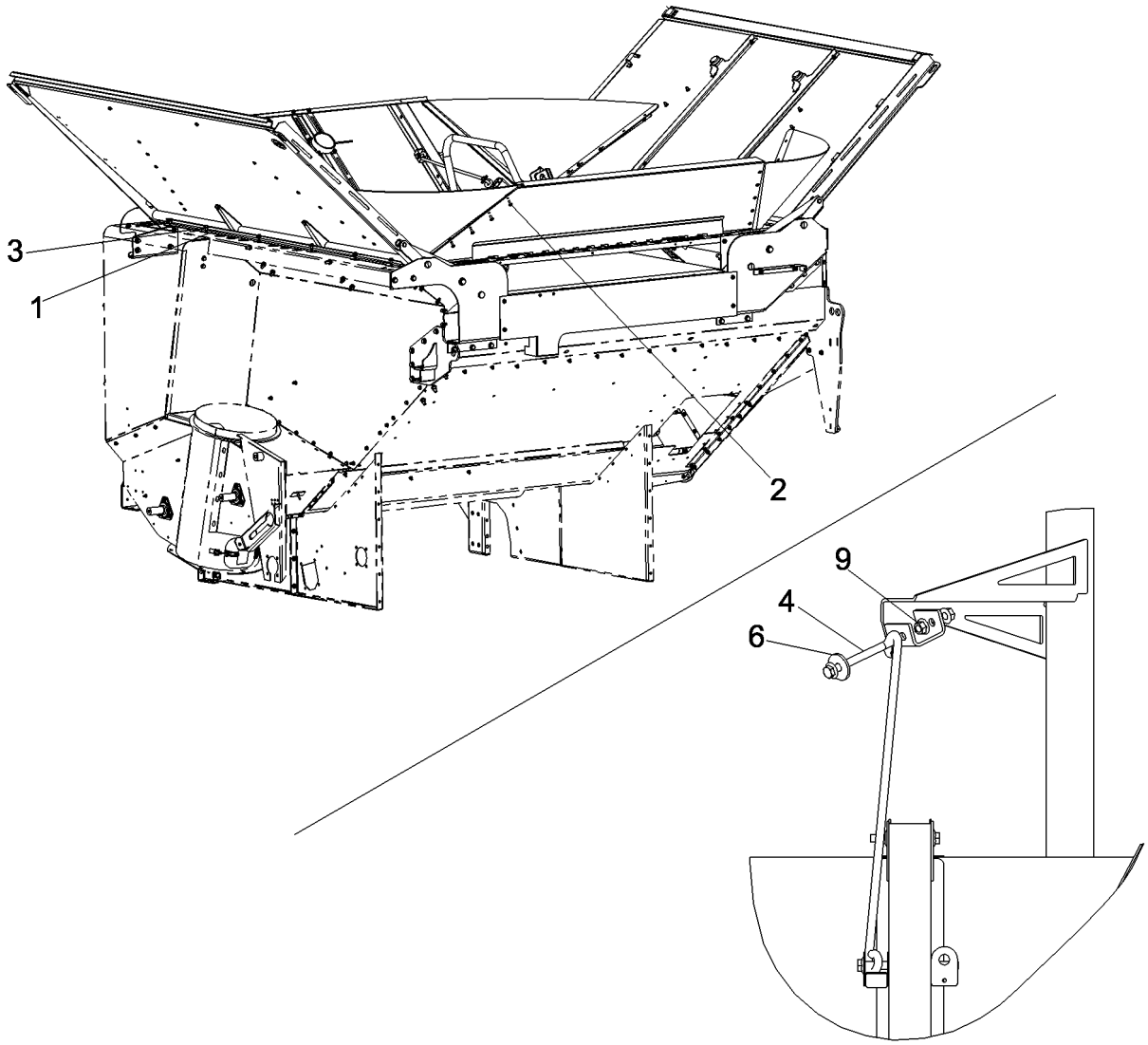

PDF created with pdfFactory trial version www.pdffactory.com

7088 AXIAL-FLOW COMBINE (EU) (4/08-)

09E-08 HARDWARE, COVER, ACCESS, GRAIN TANK

ссылка	Номер детали	Кол-во	Описание
1	87605674	2	SUPPORT ASSY., Grain Tank Top With Cover
2	86975890	48	SCREW, Torx Hd, M8 x 1.25 x 20, 250 Bushel
2	86975890	56	SCREW, Torx Hd, M8 x 1.25 x 20, 300 Bushel
3	87673844	6	SCREW,
4	87030021	2	BOLT, Hex Flg, M12 x 150, 10.9,
5	87698807	2	BOLT,
6	9511052	2	WASHER, M12 x 44 x 4,
7	86511326	2	WASHER, M16 x 30 x 3,
8	86507066	6	NUT, M8 x 1.25, Flg, Cl 10,
9	86512497	4	NUT, M12 x 1.75, Flg, Cl 10,
10	392530	2	NUT, M16, Cl 10,
11	10717511	2	NUT, Thin, M16 x 2, Cl 04,
12	87656137	6	BOLT, Hex Flg, M8 x 20, 10.9, Full Thd,

PDF created with pdfFactory trial version www.pdffactory.com

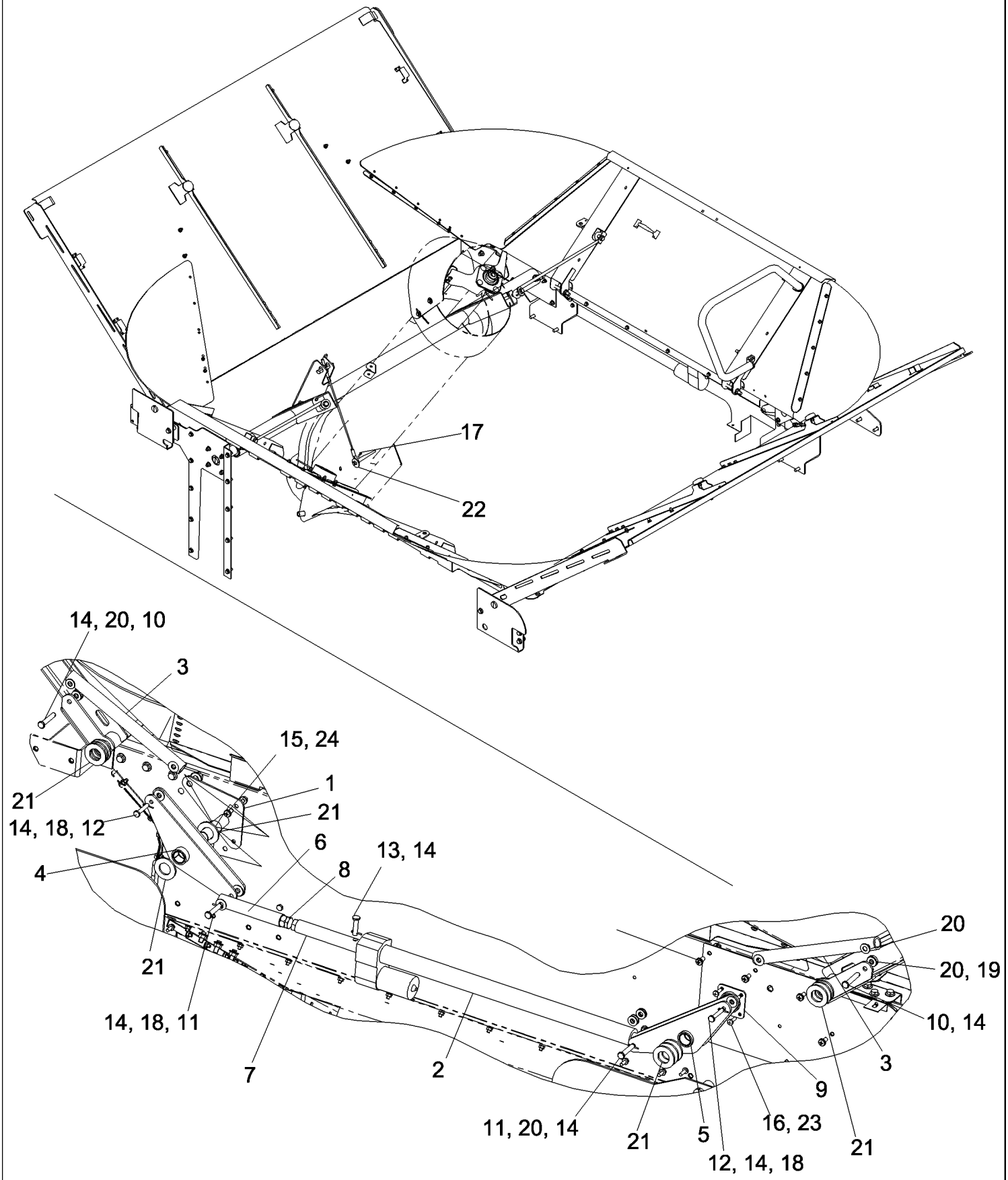

PDF created with pdfFactory trial version www.pdffactory.com

7088 AXIAL-FLOW COMBINE (EU) (4/08-)

09E-09 ACTUATOR AND LINKAGE, COVER, ACCESS, GRAIN TANK

ссылка	Номер детали	Кол-во	Описание
1	87619951	1	BRACKET, Tube Support, Grain Tank
2	84077849	1	ACTUATOR, Grain Tank
3	87731370	2	TUBE, Top Link, Tank Cover
4	87731372	1	LINK ASSY., Tank Cover, Left Hand Lower
5	87720937	1	LINK ASSY., Right Hand Lower, With Bearing
6	87740256	1	BAR ASSY., Actuator Extension, Linkage Side
7	87740258	1	BAR ASSY., Actuator Extension, Actuator Side
8	10726721	1	NUT, Thin, M20 x 1.5, Cl 05,
9	87710467	1	SUPPORT ASSY., Rockshaft, With Bushing
10	87035064	2	PIN, CLEVIS, M12 x 70,
11	87597958	2	PIN, CLEVIS,
12	728-1060	2	PIN, CLEVIS, M10 x 60,
13	NSS	1	NOT SERVICED SEPARATELY, PIN, Clevis
14	130004	7	PIN, SPLIT (COTTER), M3.2 x 25,
15	87036807	8	SCREW,
16	86585704	4	SCREW, Cross Pan Hd, M8 x 25,
17	394818	1	PIN, SPLIT (COTTER), M5 x 25,
18	87613189	6	WASHER,
19	86592713	2	WASHER,
20	86625254	8	WASHER, M12 x 28 x 2.5,
21	86512837	11	WASHER, 1 1/4", SAE,
22	495-61066	1	WASHER,
23	86507066	4	NUT, M8 x 1.25, Flg, Cl 10,
24	86050279	8	NUT, M10 x 1.5, Flg, Cl 10,

PDF created with pdfFactory trial version www.pdffactory.com

09E-10 UNLOADER, CHAIN DRIVE

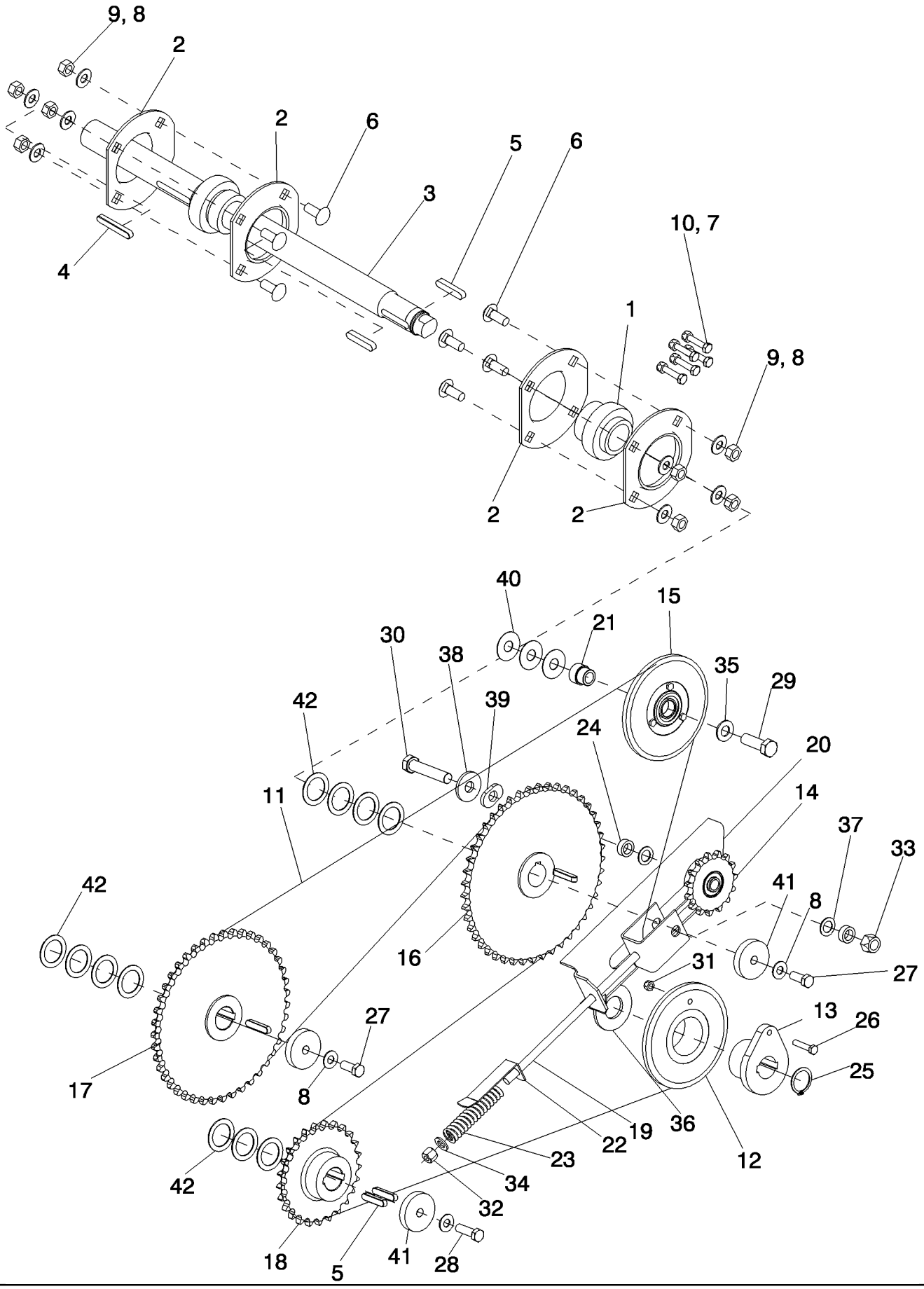

PDF created with pdfFactory trial version www.pdffactory.com

7088 AXIAL-FLOW COMBINE (EU) (4/08-)

09E-10 UNLOADER, CHAIN DRIVE

ссылка	Номер детали	Кол-во	Описание
1	455805	2	BEARING, BALL, With Lock Collar
2	86620027	4	FLANGE,
3	87555273	1	SHAFT, Unloader Drive
4	323190	1	KEY, M10 x 8 x 63, Par,
5	170012	6	KEY, M10 x 8 x 50, Par,
6	120044	8	BOLT, CARRIAGE, Short NK, M12 x 30, Cl8.8, Full Thd,
7	43129	5	BOLT, Hex, M8 x 40, 8.8,
8	140046	11	WASHER, SPRING, Belleville, M12,
9	9706685	8	NUT, M12, Cl 8,
10	86629542	5	NUT, LOCK, M8 x 1.25, Cl 8,
11	87713148	1	CHAIN, Unloader Drive, 3.0 BPS, 6088, 7088
11	87707588	1	CHAIN (AGRICULTURE), Unloader Drive, 2.5 BPS, 5088
12	84069795	1	SPROCKET, Driven
13	84073176	1	BUSHING, SHEAR BOLT,
14	86627639	1	SPROCKET,
15	86565318	1	SPROCKET ASSY.,
16	87649430	1	SPROCKET ASSY., Rear Driven, 45T, 3.0 BPS, 6088, 7088
16	87705471	1	SPROCKET ASSY., Rear Driven, 55T, 2.5 BPS, 5088
17	84069677	1	SPROCKET, 3.0 BPS, 6088, 7088
17	87705478	1	SPROCKET ASSY., Front Driven, 53T, 2.5 BPS, 5088
18	84069770	1	SPROCKET, 3.0 BPS, 6088, 7088
18	87705556	1	SPROCKET ASSY., Vertical Driven, 33T, 2.5 BPS, 5088
19	86588887	1	CLEVIS,
20	NSS	1	NOT SERVICED SEPARATELY, BRACKET
21	9515145	1	BUSHING,
22	86601493	1	INDICATOR,
23	337829	1	SPRING,
24	86582836	2	SPACER,
25	370004	1	RING, SNAP, M35, Ext,
26	43129	1	BOLT, Hex, M8 x 40, 8.8,
27	9706687	2	BOLT, Hex, M12 x 30, 8.8, Full Thd,
28	86629541	1	BOLT, Hex, M12 x 40, 8.8, Full Thd,
29	120090	1	BOLT, Hex, M16 x 50, 8.8,
30	120093	1	BOLT, Hex, M16 x 80, 8.8,
31	86629542	1	NUT, LOCK, M8 x 1.25, Cl 8,
32	412126	1	NUT, LOCK, M12 x 1.75, Cl 8,
33	86000441	1	NUT, M16 x 2, Cl 8,
34	140018	1	WASHER, M12 x 24 x 2.5,
35	140048	1	WASHER, SPRING, Belleville, M16,
36	84073175	1	WASHER, M35 x 72 x 5 Thk,
37	34821	2	WASHER, 45/64" x 1 1/8" x 16 Ga. ,

PDF created with pdfFactory trial version www.pdffactory.com

ссылка	Номер детали	Кол-во	Описание
38	86519909	1	WASHER, M17 x 46 x 5 Thk,
39	86623083	1	WASHER,
40	393062	3	WASHER, M17 x 45 x 0.9 Thk,
41	84073172	3	WASHER, M13 x 60 x 12 Thk,
42	9800957	11	WASHER, 1.41" x 2" x .06" Thk, HDN,

PDF created with pdfFactory trial version www.pdffactory.com

7088 AXIAL-FLOW COMBINE (EU) (4/08-)

09E-12 UNLOADER, BELT DRIVE, 3.0 BU/SEC

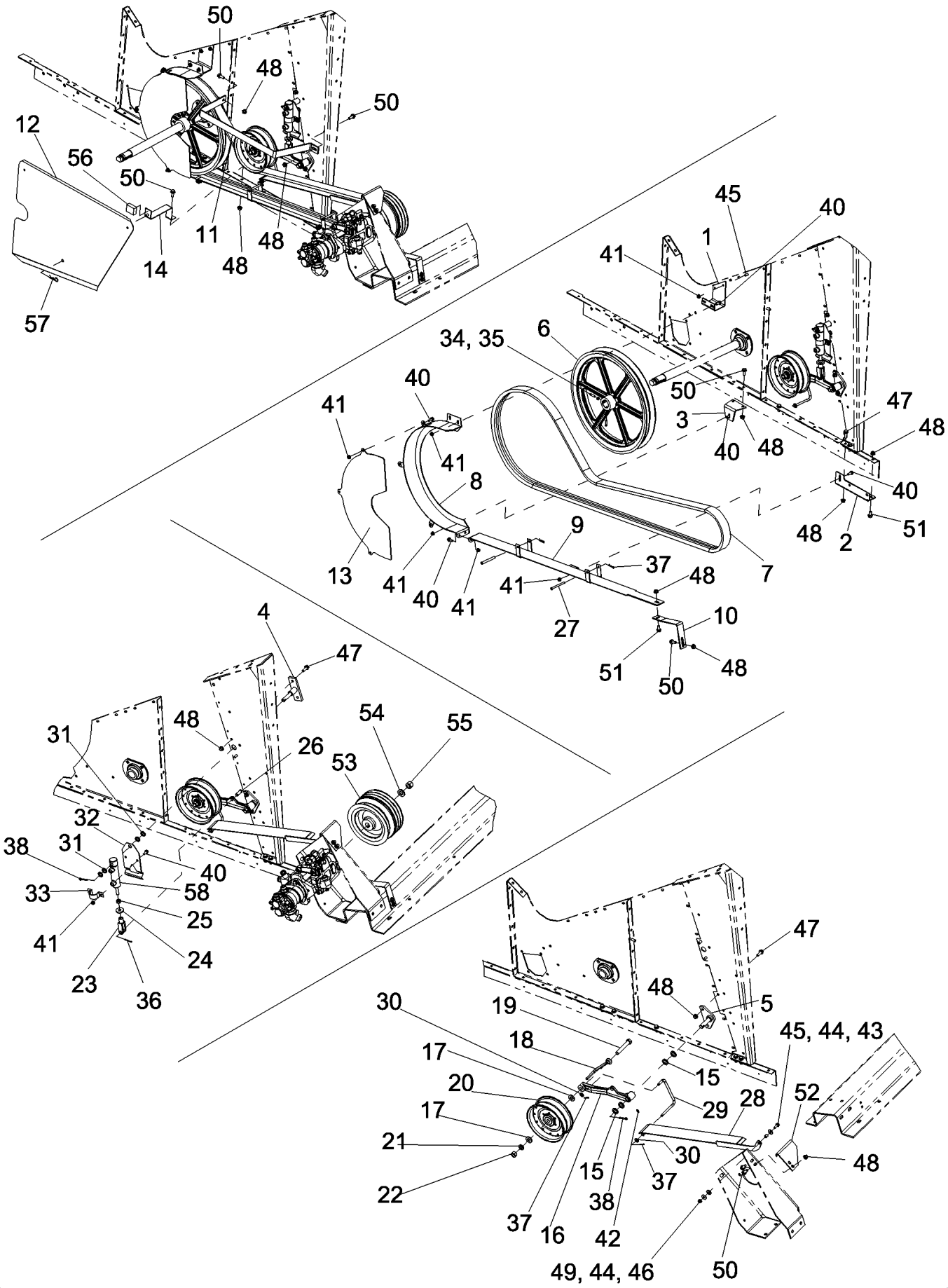

PDF created with pdfFactory trial version www.pdffactory.com

7088 AXIAL-FLOW COMBINE (EU) (4/08-)

09E-12 UNLOADER, BELT DRIVE, 3.0 BU/SEC

ссылка	Номер детали	Кол-во	Описание
1	87682668	1	SUPPORT, Unloader Belt Guide, Top
2	87682672	1	SUPPORT, Unloader Belt Guide, Center
3	87682670	1	SUPPORT, Unloader Belt Guide, Bottom
4	87555297	1	ASSEMBLY, Shaft, Unloader Idler Cylinder
5	87555294	1	SHAFT ASSY., Unloader Drive Idler Arm
6	87555276	1	PULLEY, Unloader Driven
7	87549557	1	BELT, Unloader Drive
8	87682676	1	GUIDE, Unloader Belt, Front
9	87682680	1	GUIDE, Unloader Belt, Rear
10	87395751	1	SUPPORT, Unloader Belt Guide, Rear
11	87684242	1	STRAP, Unloader Drive Shield
12	87684244	1	BRACKET, SUPPORTING, Unloader Drive Belt
13	87684246	1	COVER ASSY, Unloader Drive Belt
14	87555282	1	SUPPORT ASSY., Unloader Shield
15	495-81039	4	WASHER, 25/32" x 1 1/4" x .120",
16	112008A1	1	ARM, Unloader Auger
17	496-21066	2	WASHER, 21/32" x 1 5/16" x .150",
18	194894C1	1	ROD, Unloader Belt Upper
19	413-1064	1	BOLT, Hex, 5/8"-11 x 4", G5,
20	87547334	1	BEARING, Unloader Drive Idler
21	492-11062	1	WASHER, LOCK, 5/8",
22	425-1010	1	NUT, 5/8"-11, G5,
23	213-128	1	CLEVIS, ADJUSTABLE, 1/2"-20 x 3",
24	189153A1	1	WASHER, Unloader Clutch Retainer
25	425-118	1	NUT, 1/2"-20, G5,
26	427-8136	1	PIN, CLEVIS, 1/2" x 1.360",
27	439-1556	2	PIN, 5/16" x 3 1/2",
28	87555302	1	SUPPORT ASSY., Unloader Drive Belt
29	87555310	1	ROD, Unloader Drive Belt Upper Retainer
30	495-11041	2	WASHER, 3/8", SAE,
31	495-81175	4	WASHER, 21/32" x 1" x .120",
32	84172259	1	RETAINER, Unloader Belt Idler Arm
33	87564554	1	CLAMP, Unloader Retaining Plate
34	485-13116	2	SET SCREW, Sq Hd, 5/16"-18 x 1", Cup pt,
35	425-145	2	NUT, Jam, 5/16"-18, G5,
36	432-820	1	PIN, SPLIT (COTTER), 1/8" x 1 1/4",
37	432-812	4	PIN, SPLIT (COTTER), 1/8" x 3/4",
38	432-1620	2	PIN, SPLIT (COTTER), 1/4" x 1 1/4",
40	87656137	11	BOLT, Hex Flg, M8 x 20, 10.9, Full Thd,
41	86507066	13	NUT, M8 x 1.25, Flg, Cl 10,
42	219-87	1	NIPPLE, LUBE, 1/4"-28 x .56" lg, Self-Tap,

PDF created with pdfFactory trial version www.pdffactory.com

7088 AXIAL-FLOW COMBINE (EU) (4/08-)

09E-12 UNLOADER, BELT DRIVE, 3.0 BU/SEC

ссылка	Номер детали	Кол-во	Описание
43	87035448	1	SPACER, 1/2" Tube x 1/2",
44	495-81116	2	WASHER, .344" x 1" x .060",
45	87698833	3	BOLT,
46	86619801	1	NUT, LOCK, M8 x 1.25, Flg, Cl 8,
47	87698837	6	BOLT,
48	86050279	17	NUT, M10 x 1.5, Flg, Cl 10,
49	495-51053	1	WASHER, 1/2",
50	87698836	9	BOLT,
51	87698835	2	BOLT,
52	87555312	1	RETAINER, Unloader Drive Belt
53	87555306	1	PULLEY, Auxiliary Pump Drive
54	496-31081	1	WASHER, 13/16" x 1 1/2" x .219", HDN,
55	231-46112	1	NUT, LOCK, 3/4"-16, GB,
56	187884C1	1	SEAL,
58	87546283	1	CYLINDER ASSY., Unloader Clutch With Fittings
57	610784R1	1	SPLIT PIN/SAFETY PIN,

PDF created with pdfFactory trial version www.pdffactory.com

09E-13 AUGER ASSEMBLY, UNLOADER, 21 FEET

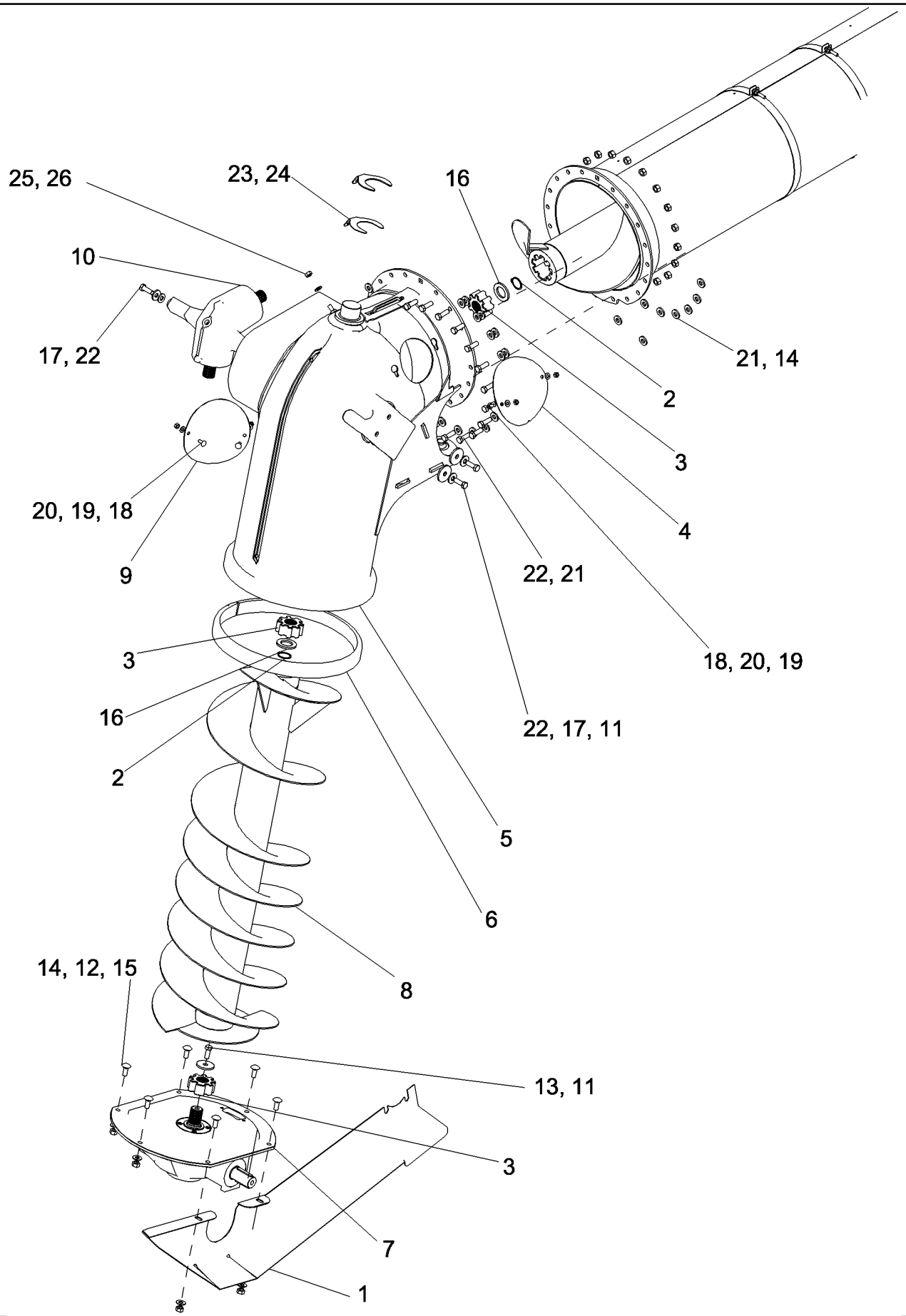

PDF created with pdfFactory trial version www.pdffactory.com

7088 AXIAL-FLOW COMBINE (EU) (4/08-)

09E-13 AUGER ASSEMBLY, UNLOADER, 21 FEET

ссылка	Номер детали	Кол-во	Описание
1	87476437	1	GUARD, Unloader Chain Drive
2	370004	2	RING, SNAP, M35, Ext,
3	87011705	3	HUB,
4	87552534	1	COVER,
5	84126361	1	ELBOW, Unloading Auger
6	86558526	1	BUSHING,
7	84320052	1	GEARBOX, Lower Unloader, See Figure 09E-15
8	84447940	1	AUGER, Standard Unloader
8	87756536	1	AUGER, Extended Wear, RFC Unloader
9	87552532	1	COVER,
10	NSS	1	NOT SERVICED SEPARATELY, GEARBOX, Upper Unloader, See Figure 09E-16
11	327084	3	WASHER, M13 x 52 x 5 Thk,
12	140046	6	WASHER, SPRING, Belleville, M12,
13	9706687	1	BOLT, Hex, M12 x 30, 8.8, Full Thd,
14	9706685	25	NUT, M12, Cl 8,
15	120044	6	BOLT, CARRIAGE, Short NK, M12 x 30, Cl8.8, Full Thd,
16	84072793	2	WASHER, M36 x 58 x 5 Thk,
17	86585939	3	WASHER, BELLEVILLE, M13 x 32 x 3.5, HT,
18	86507486	4	BOLT, CARRIAGE, Short NK, M8 x 20, Cl8.8, Full Thd,
19	9706690	4	NUT, M8, Cl 8,
20	322358	6	WASHER, SPRING, Belleville, M8,
21	394630	38	WASHER, M13 x 28 x 4, HT,
22	300389	22	BOLT, Hex, M12 x 35, 8.8, Full Thd,
23	87627724	1	SHIM, 1.5mm Thk,
24	87620925	1	SHIM, 3mm Thk,
25	140045	1	WASHER, SPRING, Belleville, M10,
26	100016	1	NUT, M10, Cl 8,

PDF created with pdfFactory trial version www.pdffactory.com

09E-14 UNLOADER TUBE ASSEMBLY, 21 FEET

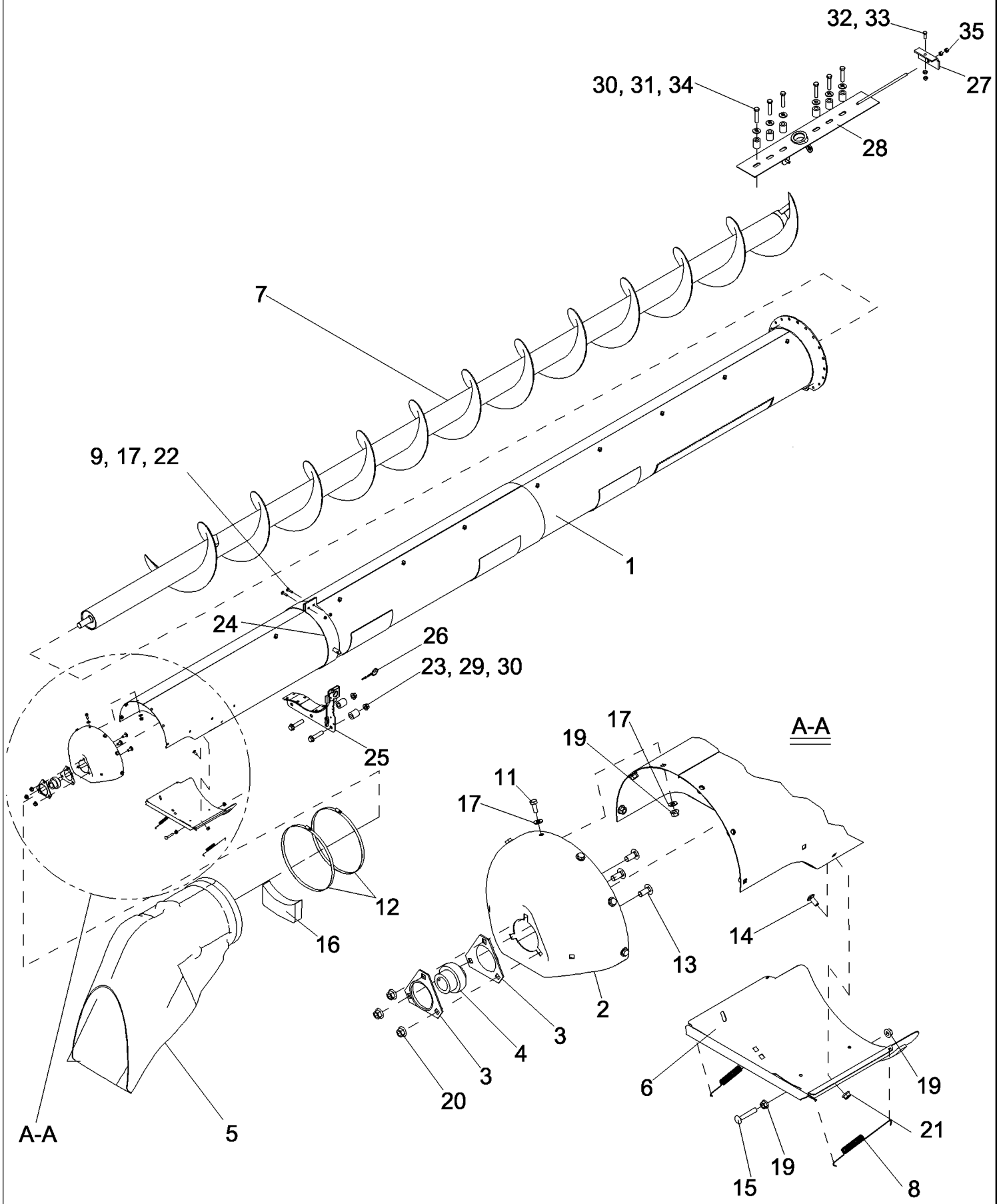

PDF created with pdfFactory trial version www.pdffactory.com

7088 AXIAL-FLOW COMBINE (EU) (4/08-)

09E-14 UNLOADER TUBE ASSEMBLY, 21 FEET

ссылка	Номер детали	Кол-во	Описание
1	87743673	1	TUBE, Unloader, Standard
2	87741381	1	COVER, Cap
3	86548970	2	FLANGE, Bearing
4	87044350	1	BEARING, BALL, 30 mm Bore, 62 mm Outer Sphere
5	84156230	1	SPOUT, DISCHARGE,
6	84131732	1	DOOR, Grain Saver
7	84447941	1	AUGER, Standard
8	1338869C2	2	SPRING,
9	86512443	2	BOLT, CARRIAGE, Short NK, M8 x 35, Cl8.8, Full Thd,
11	120104	6	BOLT, Hex, M8 x 20, 8.8,
12	87339347	2	CLAMP,
13	87682391	3	BOLT, Short NK, M10 x 25, Cl 10.9,
14	87020310	2	BOLT, Short NK, M8 x 16, Cl 10.9, Full Thd,
15	120039	1	BOLT, CARRIAGE, Short NK, M8 x 50, Cl8.8, Full Thd,
16	84164168	1	PLUG,
17	322358	12	WASHER, SPRING, Belleville, M8,
19	86507066	8	NUT, M8 x 1.25, Flg, Cl 10,
20	86050279	3	NUT, M10 x 1.5, Flg, Cl 10,
21	87681210	2	NUT, Hex, M8, Cl 10,
22	86629542	2	NUT, LOCK, M8 x 1.25, Cl 8,
23	86512498	2	NUT, M16 x 2, Flg, Cl 10,
24	87284878	1	SECURING BAND, Unloader Tube
25	87595755	1	Unloader Tube
26	87106279	1	PIN,
27	84072832	1	BRACKET,
28	86998599	1	PLATE,
29	87646188	2	BOLT,
30	87284863	8	SPACER,
31	86589278	6	WASHER, BELLEVILLE, M17 x 41.5 x 4.5, HT,
32	140046	1	WASHER, SPRING, Belleville, M12,
33	9706687	1	BOLT, Hex, M12 x 30, 8.8, Full Thd,
34	86577946	6	BOLT, Hex, M16 x 80, 10.9,
35	9706685	2	NUT, M12, Cl 8,

PDF created with pdfFactory trial version www.pdffactory.com

7088 AXIAL-FLOW COMBINE (EU) (4/08-)

09E-14A KIT, DIA, VERTICAL DISCHARGE, UNLOADER

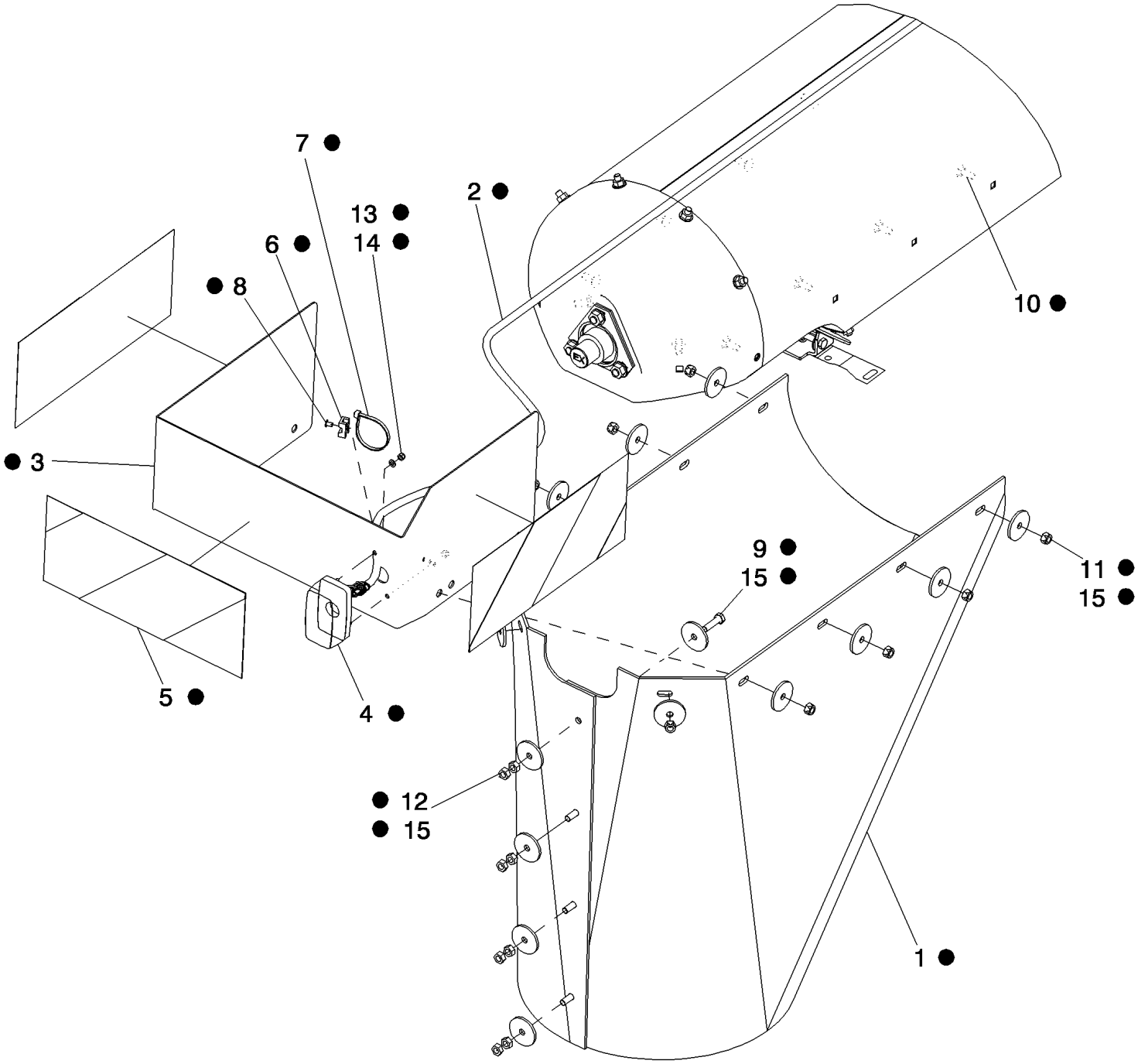

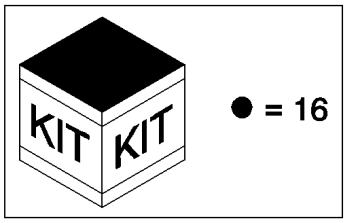

● = 16

PDF created with pdfFactory trial version www.pdffactory.com

7088 AXIAL-FLOW COMBINE (EU) (4/08-)

09E-14A KIT, DIA, VERTICAL DISCHARGE, UNLOADER

ссылка	Номер детали	Кол-во	Описание
1	84064911	1	SPOUT, DISCHARGE,
2	86610718	1	HARNESS, WIRE, Unloader Tube Signal Plate Light
3	84452652	1	SUPPORT, Plate
4	84429842	1	LAMP,
5	84441358	3	DECAL, Reflective
6	86590413	2	CLAMP,
7	86566989	2	STRAP, CABLE, M4.75 x 190.5 L,
8	325911	2	RIVET, Pop, M4.8 x 7.4,
9	43128	4	BOLT, Hex, M8 x 30, 8.8,
10	86507486	10	BOLT, CARRIAGE, Short NK, M8 x 20, Cl8.8, Full Thd,
11	86629542	10	NUT, LOCK, M8 x 1.25, Cl 8,
12	9706690	8	NUT, M8, Cl 8,
13	43440	2	NUT, LOCK, M5 x .8, Cl 8,
14	140014	2	WASHER, M5 x 10 x 1,
15	322	18	WASHER, 11/32" x 1 21/32" x .135" Thk,
16	84158659	1	DIA KIT, HARVESTER, Vertical Discharge, Unloader, Inc. 1-15

PDF created with pdfFactory trial version www.pdffactory.com

09E-14B EXTENSION, 3 FEET, UNLOADER TUBE ASSEMBLY

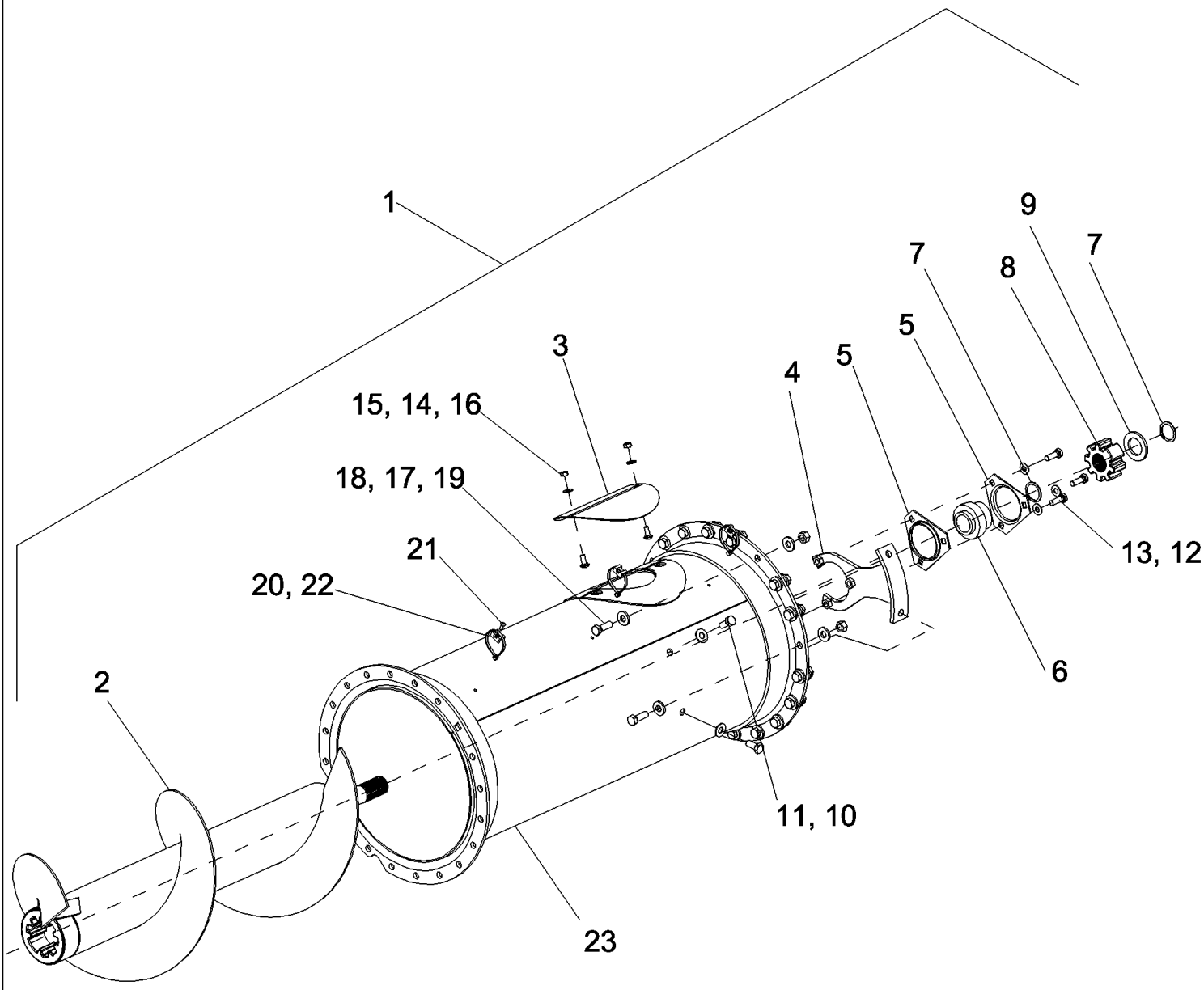

PDF created with pdfFactory trial version www.pdffactory.com

7088 AXIAL-FLOW COMBINE (EU) (4/08-)

09E-14B EXTENSION, 3 FEET, UNLOADER TUBE ASSEMBLY

ссылка	Номер детали	Кол-во	Описание
1	87354622	1	EXTENSION, DIA, Unloading Auger, Standard, Inc. 2-23
2	87575223	1	AUGER, 3 ft, Standard And Perforated
3	84072843	1	COVER,
4	84072623	1	SUPPORT,
5	86620026	2	FLANGE,
6	87605590	1	BEARING, SPHERICAL, 35 mm Bore, 72 mm Outer Sphere
7	370004	2	RING, SNAP, M35, Ext,
8	87011705	1	HUB,
9	84072793	1	WASHER, M36 x 58 x 5 Thk,
10	140046	2	WASHER, SPRING, Belleville, M12,
11	300388	2	BOLT, Hex, M12 x 25, 8.8,
12	140045	3	WASHER, SPRING, Belleville, M10,
13	43140	3	BOLT, Hex, M10 x 30, 8.8, Full Thd,
14	322358	2	WASHER, SPRING, Belleville, M8,
15	86507486	2	BOLT, CARRIAGE, Short NK, M8 x 20, Cl8.8, Full Thd,
16	9706690	2	NUT, M8, Cl 8,
17	394630	38	WASHER, M13 x 28 x 4, HT,
18	9706685	19	NUT, M12, Cl 8,
19	300389	19	BOLT, Hex, M12 x 35, 8.8, Full Thd,
20	86590413	3	CLAMP,
21	445394	3	RIVET, Pop, M4.8 x 12.7,
22	86566989	3	STRAP, CABLE, M4.75 x 190.5 L,
23	87470154	1	TUBE ASSY., Unloader, 3 ft, Black

PDF created with pdfFactory trial version www.pdffactory.com

09E-15 GEARBOX, LOWER UNLOADER

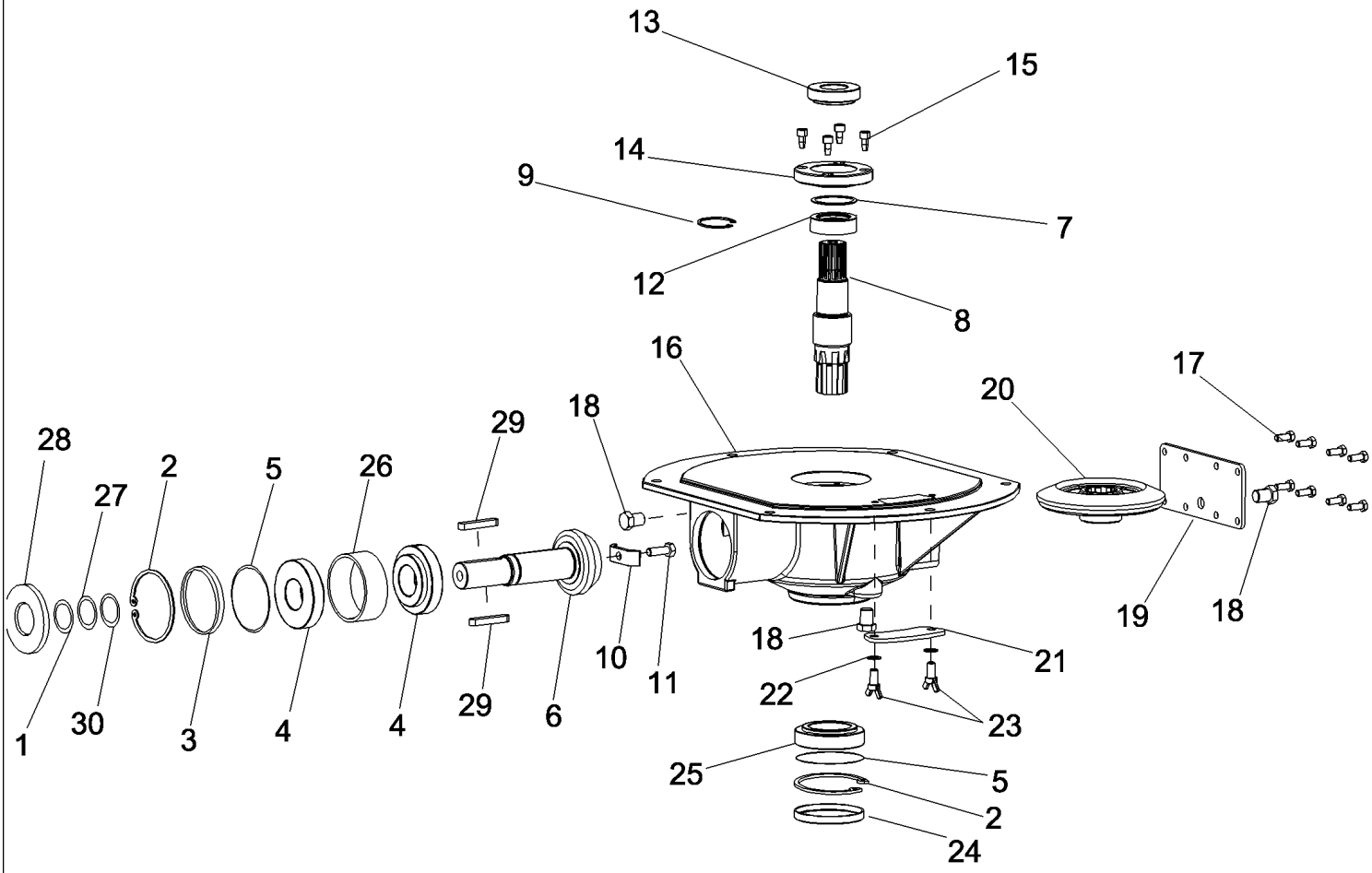

PDF created with pdfFactory trial version www.pdffactory.com

7088 AXIAL-FLOW COMBINE (EU) (4/08-)

09E-15 GEARBOX, LOWER UNLOADER

ссылка	Номер детали	Кол-во	Описание
1	440442	1	RING, SNAP, M40, Ext,
2	370013	2	RING, SNAP, M90, Int,
3	86623215	1	SPACER,
4	86613758	2	BEARING ASSY,
5	86623216	3	SHIM,
6	86623217	1	SHAFT, SHORT,
7	86623218	1	SHIM,
8	86623219	1	SHAFT,
9	370004	1	RING, SNAP, M35, Ext,
10	86623220	1	PLATE,
11	9804262	1	BOLT, Hex Flg, M10 x 30, 8.8,
12	86626475	1	BEARING, ROLLER, TAPERED,
13	86623221	1	SEAL, RUBBER,
14	86623222	1	FLANGE,
15	86566099	4	SCREW, Hex Soc Hd, M8 x 16, 12.9,
16	86623223	1	HOUSING,
17	120104	8	BOLT, Hex, M8 x 20, 8.8,
18	9837623	3	PLUG,
19	86623224	1	COVER,
20	86623225	1	GEAR, BEVEL,
21	86623226	1	COVER,
22	9511037	2	SEALRING,
23	412049	2	SCREW, Wing, M10 x 16,
24	86623227	1	COVER,
25	853116	1	BEARING, ROLLER, TAPERED,
26	86623228	1	SPACER, 33mm L,
27	86623229	1	SHIM,
28	86623230	1	SEAL,
29	170013	2	KEY,
30	86623231	1	SHIM, M40 x 52 x 2 Thk,

PDF created with pdfFactory trial version www.pdffactory.com

09E-16 GEARBOX, UPPER UNLOADER

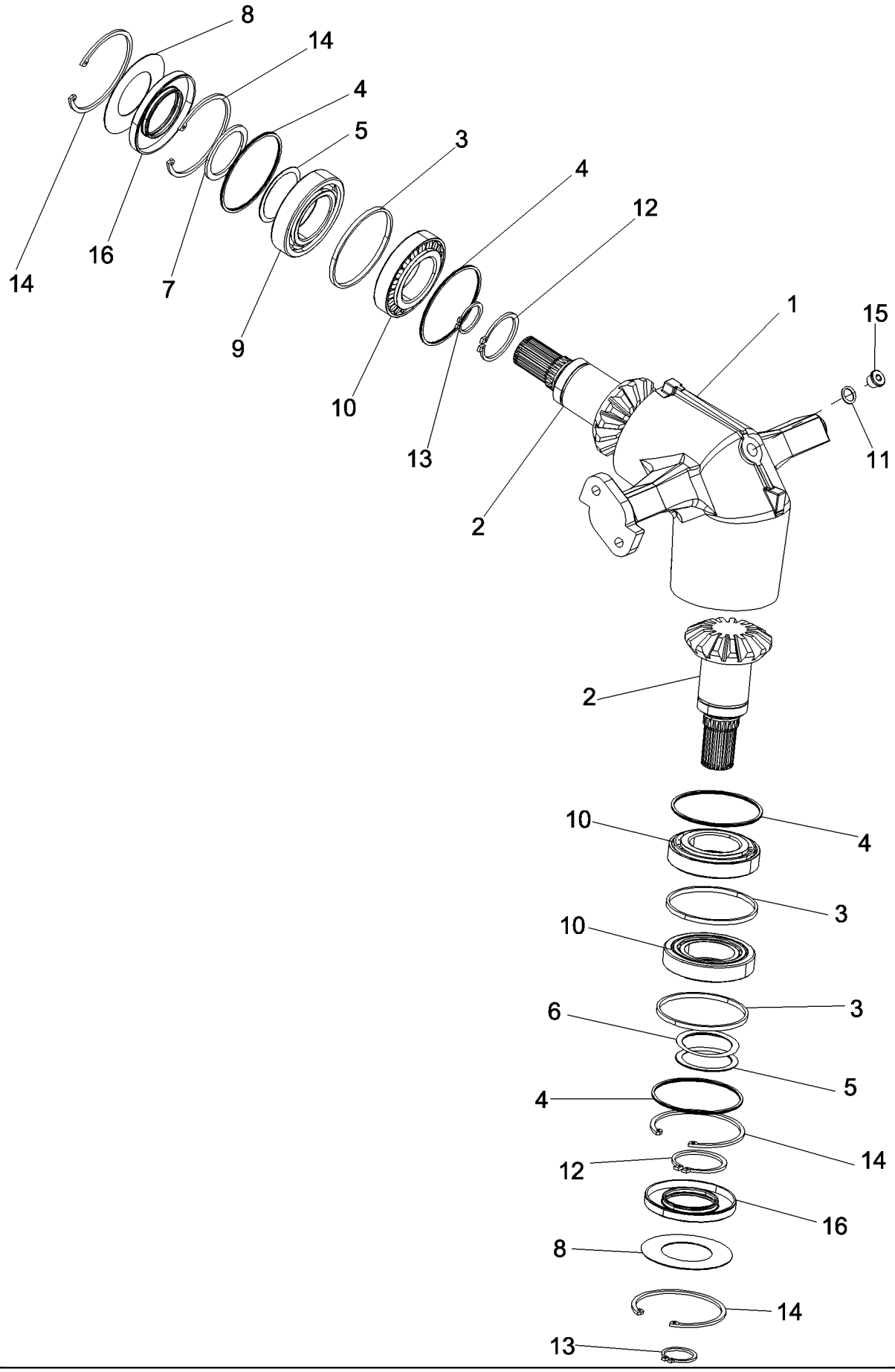

PDF created with pdfFactory trial version www.pdffactory.com

7088 AXIAL-FLOW COMBINE (EU) (4/08-)

09E-16 GEARBOX, UPPER UNLOADER

ссылка	Номер детали	Кол-во	Описание
1	87331121	1	HOUSING, Upper Unloader
2	87331114	2	SHAFT, Upper Unloader
3	87332420	3	SPACER, RING, Shim
4	87346736	4	KIT, SHIM,
5	87332423	2	KIT, SHIM,
6	87345893	1	SHIM, 1mm Thk,
7	87345894	1	SHIM, 3mm Thk,
8	87332418	2	WASHER, M56 x 100 x 1 Thk,
9	ST265	1	BEARING, BALL,
10	26799990	3	BEARING ASSY,
11	9511034	1	GASKET,
12	800-5155	2	RING, SNAP, M55, Ext, Hvy,
13	87349260	2	CIRCLIP, M34, Ext,
14	370026	4	RING, SNAP, Int, M100 x 3,
15	84437088	1	PLUG, 3/8" Gas,
16	87331115	2	SEAL,

PDF created with pdfFactory trial version www.pdffactory.com

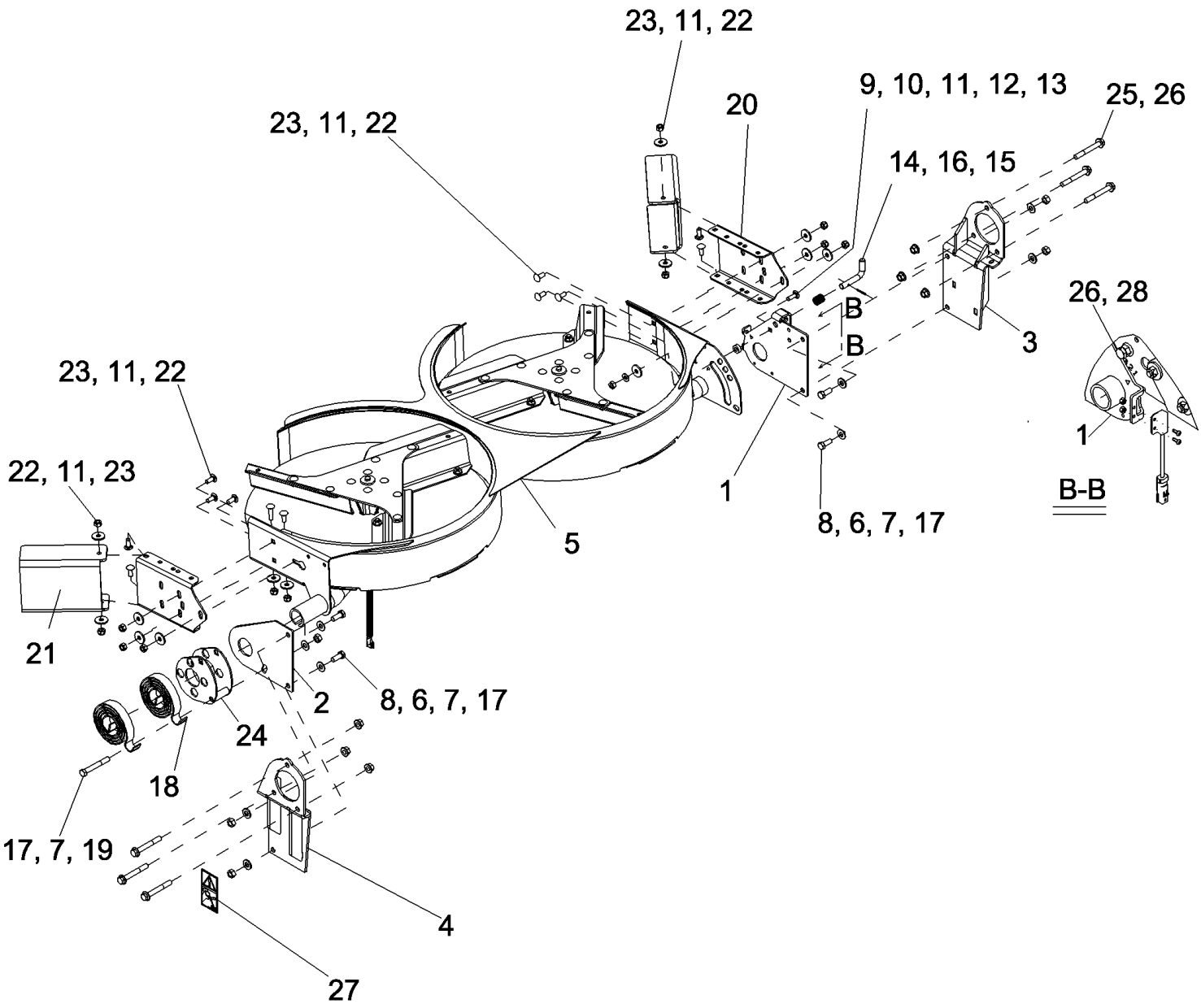

PDF created with pdfFactory trial version www.pdffactory.com

7088 AXIAL-FLOW COMBINE (EU) (4/08-)

09F-01 CHAFF SPREADER ASSEMBLY, MOUNTING

ссылка	Номер детали	Кол-во	Описание
1	84130185	1	BRACKET, Left Hand
2	87709925	1	BRACKET, Right Hand
3	87703726	1	BRACKET, Straw Spreader Mount, Left Hand
4	87703732	1	BRACKET, Straw Spreader Mount, Right Hand
5	NSS	1	NOT SERVICED SEPARATELY, STRAW SPREADER ASSEMBLY, See Figure 09F-02
6	87364	4	WASHER, 1/2", SAE,
7	140046	5	WASHER, SPRING, Belleville, M12,
8	9706687	4	BOLT, Hex, M12 x 30, 8.8, Full Thd,
9	86512446	1	BOLT, CARRIAGE, Short NK, M10 x 30, Cl8.8, Full Thd,
10	86997386	1	BUSHING,
11	140042	11	WASHER, M10 x 34 x 3,
12	140045	1	WASHER, SPRING, Belleville, M10,
13	100016	1	NUT, M10, Cl 8,
14	86611330	1	PIN,
15	87913	1	PIN, LOCK, 1/8" x 1 1/4", Slotted,
16	86611329	1	SPRING,
17	9706685	5	NUT, M12, Cl 8,
18	86974376	2	SPRING,
19	86508581	1	BOLT, Hex, M12 x 90, 8.8,
20	87703483	2	DEFLECTOR,
21	87044160	2	BRACKET,
22	86633356	10	BOLT, CARRIAGE, Short NK, M10 x 25, Cl8.8, Full Thd,
23	100037	10	NUT, M10 x 1.5, Cl 8,
24	87107811	1	PLATE, Spring Loaded
25	87698847	6	BOLT,
26	86512497	8	NUT, M12 x 1.75, Flg, Cl 10,
27	87756532	1	DECAL, Warning
28	9824642	1	BOLT, Hex, M12 x 35, 10.9,

PDF created with pdfFactory trial version www.pdffactory.com

09F-02 CHAFF SPREADER ASSEMBLY

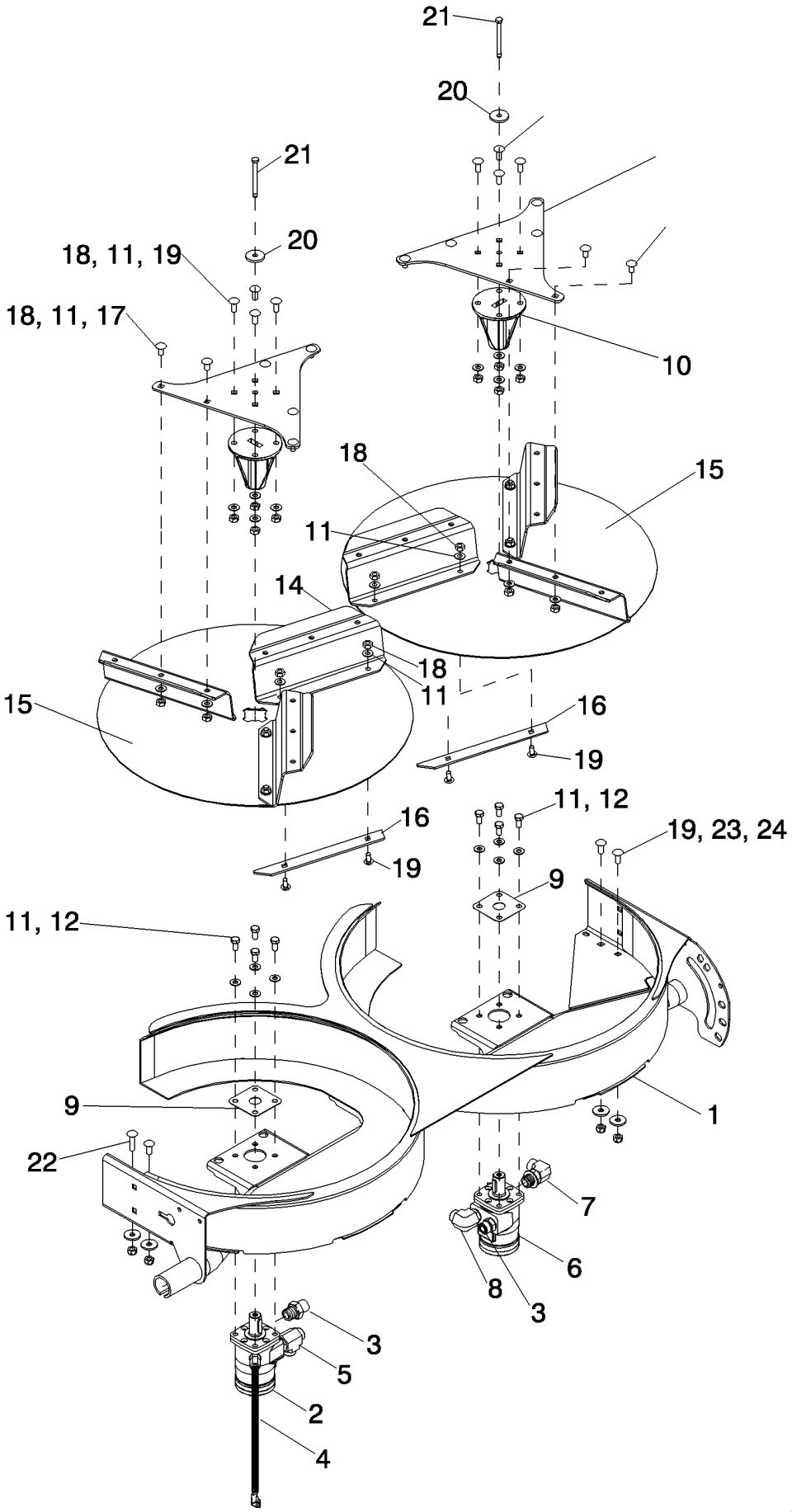

PDF created with pdfFactory trial version www.pdffactory.com

7088 AXIAL-FLOW COMBINE (EU) (4/08-)

09F-02 CHAFF SPREADER ASSEMBLY

ссылка	Номер детали	Кол-во	Описание
1	84130188	1	FRAME ASSY, Straw Spreader
2	87519076	1	MOTOR, HYDRAULIC, Straw Spreader Disc
3	86579680	2	CONNECTOR, HYD., 1"-14 ORFS x M22 x 1.5 ORB,
4	87662556	1	SENSOR, Speed
5	86579705	1	TEE, 1"-14 ORFS x M22 x 1.5 ORB Run,
6	87519075	1	MOTOR, HYDRAULIC, With Drain
7	86580178	1	ELBOW, 90є, 11/16"-18 ORFS x M12 x 1.5 ORB,
8	86579694	1	ELBOW, 90є, 1"-14 ORFS x M22 x 1.5 ORB,
9	87531172	2	PLATE, COVER,
10	87314540	2	HUB, Straw Spreader
11	140045	40	WASHER, SPRING, Belleville, M10,
12	43138	8	BOLT, Hex, M10 x 20, 8.8, Full Thd,
13	87709565	2	PLATE ASSY.,
14	87703195	6	BLADE,
15	87703180	2	DISC, Straw Spreader
16	87703207	6	PLATE ASSY.,
18	100016	32	NUT, M10, Cl 8,
17	120041	12	BOLT, CARRIAGE, Short NK, M10 x 20, Cl8.8, Full Thd,
19	86633356	23	BOLT, CARRIAGE, Short NK, M10 x 25, Cl8.8, Full Thd,
20	264198	2	WASHER,
21	87302583	2	BOLT, LOCK, Hex, M8 x 90, Cl 10.9,
22	374892	1	BOLT, CARRIAGE, Short NK, M10 x 40, Cl8.8, Full Thd,
23	140042	4	WASHER, M10 x 34 x 3,
24	100037	4	NUT, M10 x 1.5, Cl 8,

PDF created with pdfFactory trial version www.pdffactory.com

09F-03 REMOTE ADJUST SPREADER

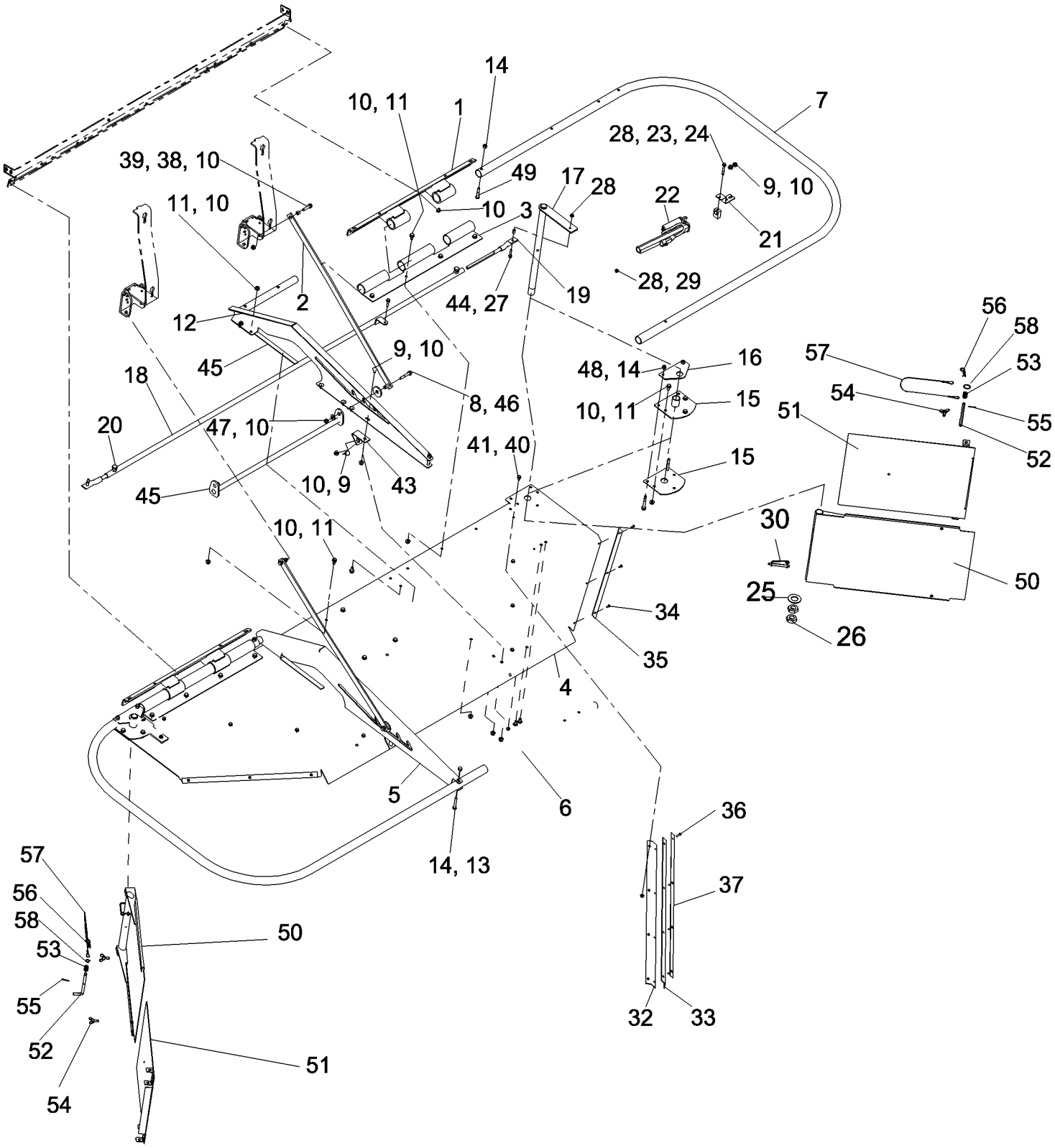

PDF created with pdfFactory trial version www.pdffactory.com

7088 AXIAL-FLOW COMBINE (EU) (4/08-)

09F-03 REMOTE ADJUST SPREADER

ссылка	Номер детали	Кол-во	Описание
1	87635316	2	SUPPORT ASSY., Hoop Shield
2	84136365	2	SUPPORT, Hoop Shield
3	87382523	2	HINGE, Spreader Shield
4	87474999	1	BRACKET, Spreader
5	87473687	1	SUPPORT, Hoop Shield, Left Hand
6	87475002	1	TUBE, Hoop Shield, Rear
7	87384099	2	GUARD, Straw Spreader Hoop
8	87698763	2	BOLT,
9	87020310	12	BOLT, Short NK, M8 x 16, Cl 10.9, Full Thd,
10	86507066	40	NUT, M8 x 1.25, Flg, Cl 10,
11	87681207	22	BOLT,
12	87473689	1	SUPPORT, Hoop Shield, Right Hand
13	87015731	2	BOLT, Hex, M8 x 50, 8.8, Full Thd,
14	86528579	8	NUT, LOCK, M8 x 1.25, Cl 10,
15	84180269	4	SHIELD, Spreader Lever
16	87470044	2	PLATE ASSY., Spreader Shield Pivot
17	87709569	2	PIVOT ASSY., Spreader Pivot
18	87709570	1	BRACKET, Spreader Adjust
19	87581467	2	TUBE, Spreader Adjust
20	9861444	2	BOLT, Hex, M10 x 20, 10.9, Full Thd,
21	87477694	1	PLATE, Actuator Mounting
22	87347281	1	ACTUATOR,
23	87475884	1	PIVOT ASSY., Actuator Mounting
24	87670760	1	BOLT,
25	495-11106	2	WASHER, 1", SAE,
26	87034489	4	NUT,
27	87698832	2	BOLT,
28	87301498	4	NUT,
29	87698760	1	BOLT,
30	1338021C1	2	PIN, Latch Locking
31	87521572	1	PAD,
32	87473681	2	ANGLE, Spreader Shield
33	87475886	2	CANVAS, Spreader Shield
34	445394	6	RIVET, Pop, M4.8 x 12.7,
35	87473683	2	SUPPORT, Seal Retainer
36	445395	8	RIVET, Pop, M4.8 x 18.1,
37	87475882	2	SUPPORT, Seal Retainer
38	87026609	2	SPACER, 1/2" Pipe x 3/8",
39	87695419	2	BOLT,
40	87698753	8	BOLT,
41	86050300	8	NUT, M6 x 1, Flg, Cl10,

PDF created with pdfFactory trial version www.pdffactory.com

ссылка	Номер детали	Кол-во	Описание
42	87568441	1	HARNESS, WIRE, Spreader Control
43	87473675	2	ANGLE, Spreader Shield
44	87301392	2	SPACER, 1/8" Pipe x .591",
45	87474831	1	LATCH, Spreader Shield
46	9511052	2	WASHER, M12 x 44 x 4,
47	495-21038	2	WASHER, 5/16",
48	87670761	4	BOLT,
49	386045	2	SCREW, Hex, M8 x 45, 8.8,
50	87709567	1	SHIELD, Spreader
51	87377998	1	SHIELD, Spreader Extension
52	87372713	1	PIN, Spreader Shield Lock
53	540815R2	1	SPRING,
54	3139081R1	2	THUMB SCREW, M8 x 20,
55	432-612	1	PIN, SPLIT (COTTER), 3/32" x 3/4",
56	586591R1	1	PIN, SPLIT (COTTER),
57	427336A1	1	CABLE,
58	495-11041	1	WASHER, 3/8", SAE,

PDF created with pdfFactory trial version www.pdffactory.com

09F-04 CHAFF SPREADER, IDLER ASSEMBLY

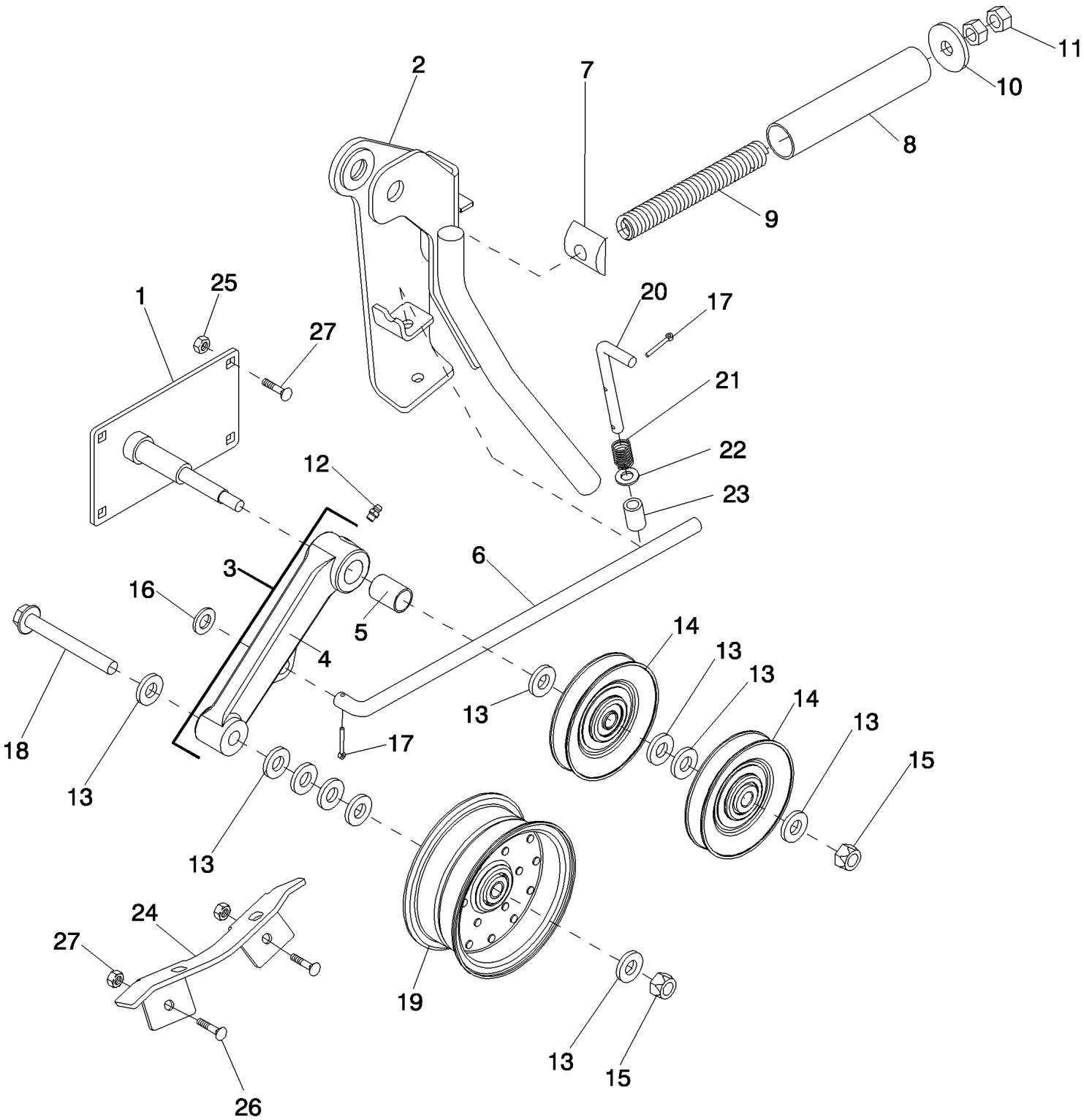

PDF created with pdfFactory trial version www.pdffactory.com

7088 AXIAL-FLOW COMBINE (EU) (4/08-)

09F-04 CHAFF SPREADER, IDLER ASSEMBLY

ссылка	Номер детали	Кол-во	Описание
1	87559875	1	TIGHTENER, Spreader Drive
2	87639306	1	LEVER ASSY., Spreader Drive
3	87668016	1	ARM ASSY., Inc. 4, 5
4	87668007	1	ARM, Straw Spreader
5	1979989C1	2	BUSHING, Idler Arm
6	87647641	1	ROD, Spreader Belt Tensioner
7	194652C1	1	PIVOT, Primary Drive
8	1315197C1	1	SPACER, Spreader Drive
9	1315223C1	1	SPRING, Spreader Drive
10	9511052	1	WASHER, M12 x 44 x 4,
11	9706685	2	NUT, M12, Cl 8,
12	219-87	1	NIPPLE, LUBE, 1/4"-28 x .56" lg, Self-Tap,
13	86625256	10	WASHER, M12 x 28.5 x 4, HT,
14	87668029	2	PULLEY, Flanged Idler
15	100038	2	NUT, M12 x 1.75, Cl 8,
16	86511324	1	WASHER, M12 x 24 x 2.5,
17	130004	2	PIN, SPLIT (COTTER), M3.2 x 25,
18	87032825	1	BOLT, Hex Flg, M12 x 100, 10.9,
19	87559515	1	PULLEY, Idler
20	186736C3	1	ROD, Tailgate Lock
21	540815R2	1	SPRING,
22	86511323	1	WASHER, M10 x 20 x 2,
23	87036413	1	SPACER, 5/8" Pipe x 15/16",
24	87639961	1	BRACKET, Spreader Drive Lever Stop
25	87682383	4	BOLT,
26	857-8025	2	BOLT, Hex Flg, M8 x 25, 10.9,
27	86507066	6	NUT, M8 x 1.25, Flg, Cl 10,

PDF created with pdfFactory trial version www.pdffactory.com

7088 AXIAL-FLOW COMBINE (EU) (4/08-)

09F-05 CHAFF SPREADER, DRIVE

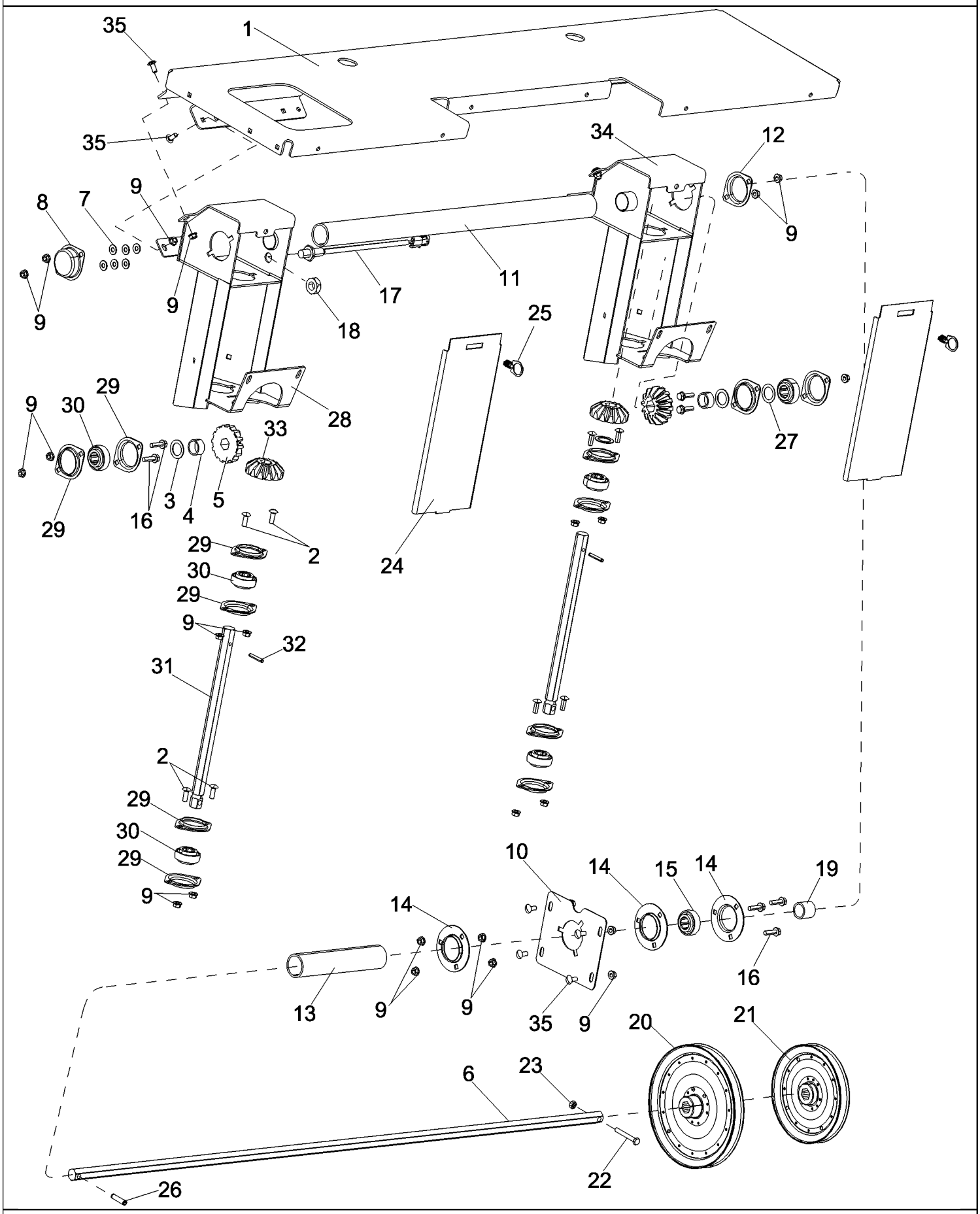

PDF created with pdfFactory trial version www.pdffactory.com

7088 AXIAL-FLOW COMBINE (EU) (4/08-)

09F-05 CHAFF SPREADER, DRIVE

ссылка	Номер детали	Кол-во	Описание
1	87678466	1	TUBE, HYD, Fuel Tank Bottom
2	87682384	8	BOLT,
3	495-81069	4	WASHER, 1 1/32" x 1 1/2" x .060",
4	87036414	2	SPACER, 1 1/4" Tube x 5/8",
5	194194C1	2	GEAR, Spreader Drive
6	87560898	1	SHAFT, Straw Spreader Cross
7	895-15008	6	WASHER, M8 x 20 x 1.6,
8	750092	1	COVER,
9	86507066	33	NUT, M8 x 1.25, Flg, Cl 10,
10	87596824	1	PLATE, Straw Spreader Bearing
11	87363874	1	TUBE, Shaft Cover
12	50591	1	FLANGE, Bearing
13	87573762	1	TUBE, Shaft Cover
14	86603075	3	FLANGE, 3-Bolt
15	87650438	1	BEARING, Shaker Shaft
16	87030775	7	BOLT, Hex Flg, M8 x 30, 10.9, Full Thd,
17	245193C2	1	SENSOR, MPH and RPM
18	425-1512	1	NUT, Jam, 3/4"-10, G5,
19	87034740	1	SPACER, 1 Pipe x 1.181",
20	87757148	1	PULLEY, Straw Spreader Drive, 10 Inch
21	87757146	1	PULLEY, Straw Spreader Drive, 8 Inch
22	120061	1	BOLT, Hex, M8 x 60, 8.8,
23	9628098	1	NUT, LOCK, M8 x 1.25, Cl 10,
24	87649537	2	BRACKET, Spreader Drive
25	188029C1	2	LATCH,
26	87040620	1	PIN, LOCK, 3/8" x 1 1/2", Slotted,
27	495-81068	2	WASHER, 1 1/32" x 1 1/2" x .030",
28	87649413	1	BRACKET, Spreader Drive, Left Hand
29	50591	12	FLANGE, Bearing
30	87650438	6	BEARING, Shaker Shaft
31	84163923	2	SHAFT, Straw Spreader
32	637428	2	PIN, GROOVED,
33	194194C1	2	GEAR, Spreader Drive
34	87649415	1	BRACKET, Spreader Drive, Right Hand
35	87682383	12	BOLT,

PDF created with pdfFactory trial version www.pdffactory.com

09F-06 CHAFF SPREADER - SHIELDS

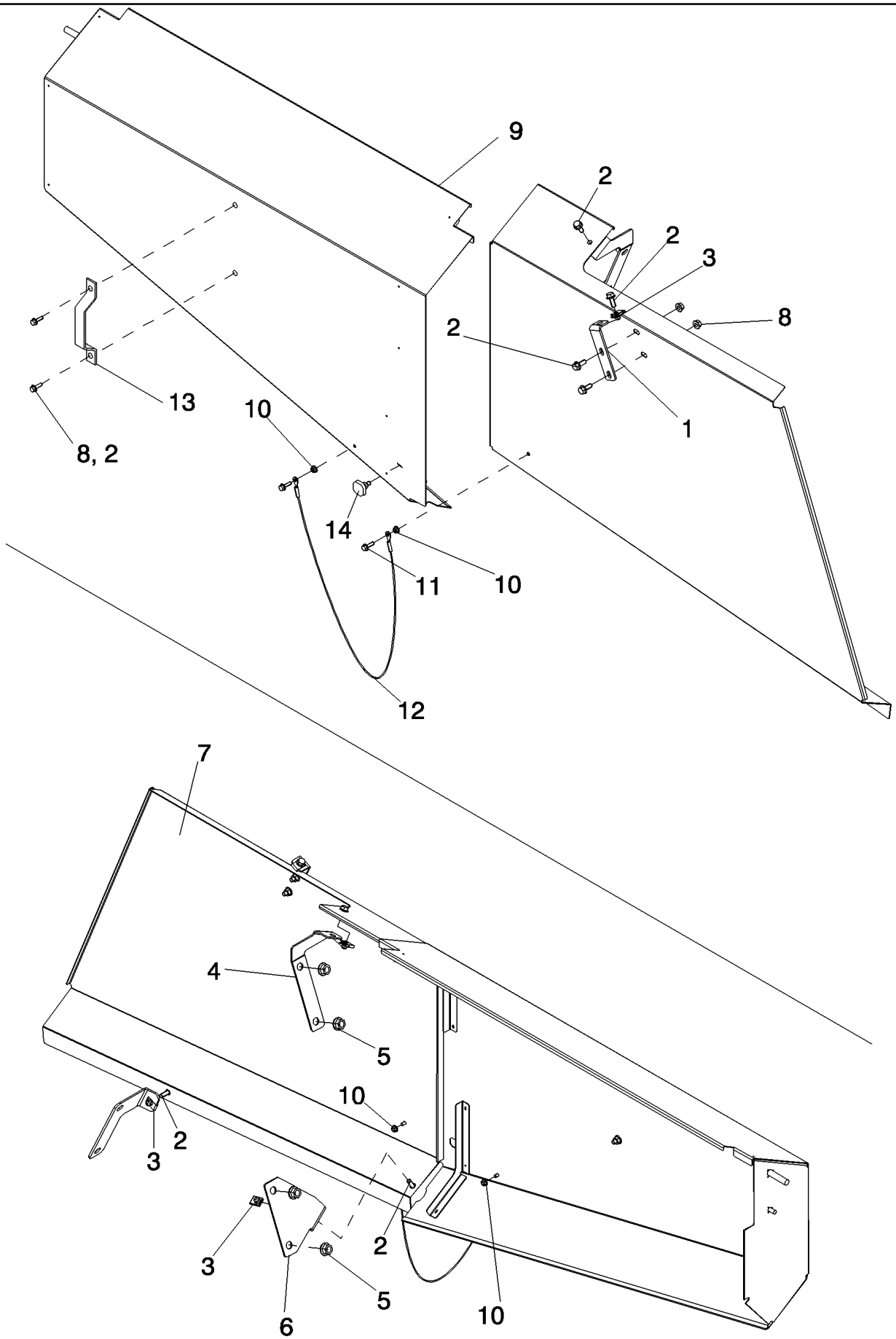

PDF created with pdfFactory trial version www.pdffactory.com

7088 AXIAL-FLOW COMBINE (EU) (4/08-)

09F-06 CHAFF SPREADER - SHIELDS

ссылка	Номер детали	Кол-во	Описание
1	84127465	1	BRACKET, Fixed Straw Spreader Shield
2	87656137	8	BOLT, Hex Flg, M8 x 20, 10.9, Full Thd,
3	86508354	4	NUT,
4	87654964	1	BRACKET, Fixed Shield, Lower
5	86512497	4	NUT, M12 x 1.75, Flg, Cl 10,
6	84136322	1	BRACKET, Fixed Spreader Drive Shield
7	84136319	1	BRACKET, Fixed Straw Spreader Drive
8	86507066	4	NUT, M8 x 1.25, Flg, Cl 10,
9	87655293	1	PANEL ASSY., Straw Spreader Drive Shield
10	86050300	4	NUT, M6 x 1, Flg, Cl10,
11	87675531	2	BOLT,
12	132657A2	1	CABLE, Reverser Shield Tether
13	87735697	1	LATCH, Door
14	182925A1	1	LOCK, Straw Spreader Drive Shield

PDF created with pdfFactory trial version www.pdffactory.com

09F-07 STRAW/CHAFF SPREADER

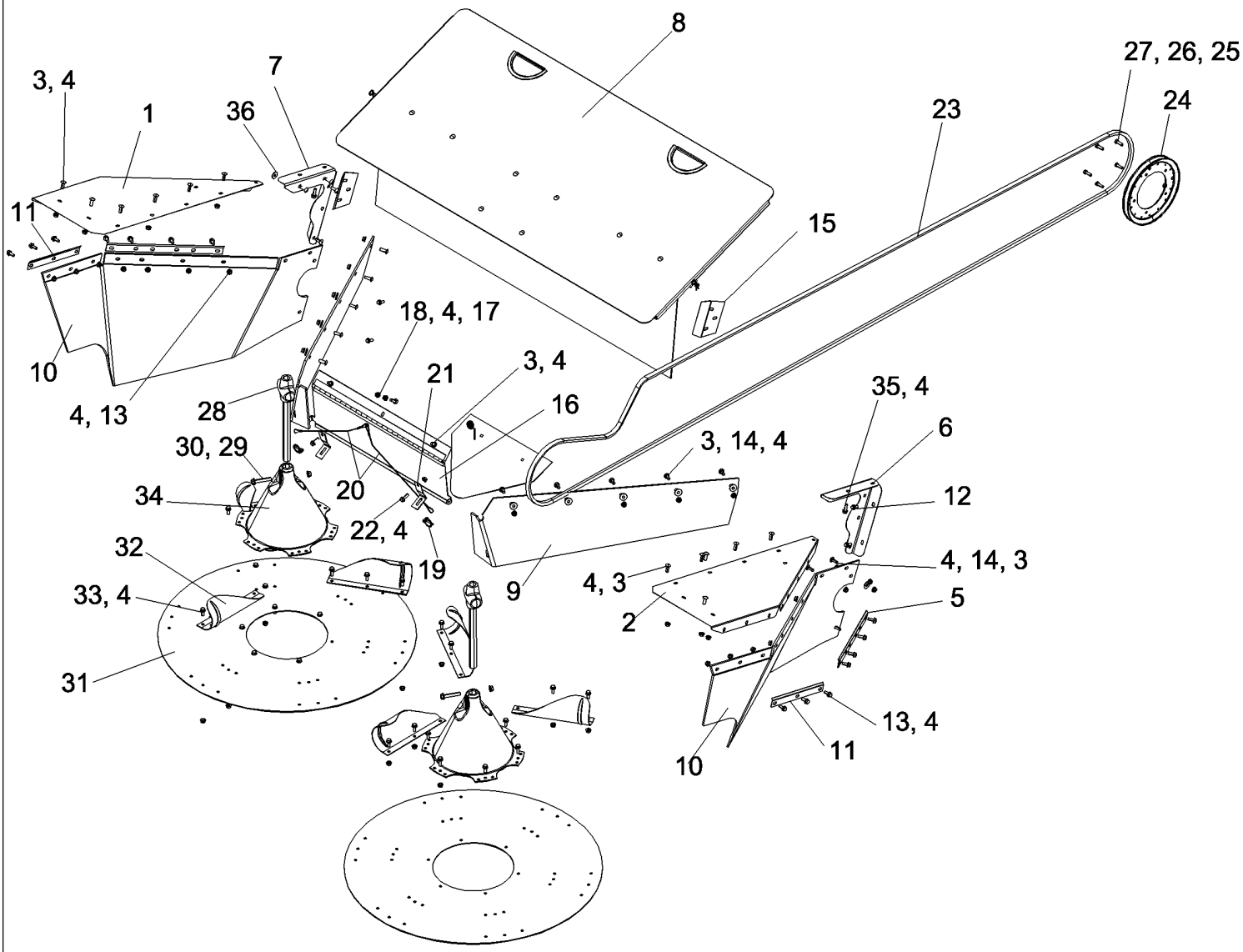

PDF created with pdfFactory trial version www.pdffactory.com

7088 AXIAL-FLOW COMBINE (EU) (4/08-)

09F-07 STRAW/CHAFF SPREADER

ссылка	Номер детали	Кол-во	Описание
1	87478154	1	BRACKET, Straw Spreader Shield, Left Hand
2	87478152	1	BRACKET, Straw Spreader Shield, Right Hand
3	87682384	31	BOLT,
4	86507066	75	NUT, M8 x 1.25, Flg, Cl 10,
5	87652036	2	BRACKET, Straw Spreader Shield
6	87686615	1	BRACKET, Spreader Seals, Right Hand
7	87686616	1	BRACKET, Spreader Seals, Left Hand
8	NSS	1	NOT SERVICED SEPARATELY, DRIBBLE PAN ASSEMBLY, Chaff and Straw Spreader, See Figure 09F-09
9	87732802	2	SEAL, Spreader
10	87688165	2	SEAL, Spreader
11	87652033	2	BRACKET, Straw Spreader Shield
12	86625200	4	SCREW, SELF TAPPING, Hex Flg Hd, M8 x 20,
13	87656137	32	BOLT, Hex Flg, M8 x 20, 10.9, Full Thd,
14	495-81116	18	WASHER, .344" x 1" x .060",
15	87701981	2	PLATE ASSY., Spreader Seal
16	87705042	1	DEFLECTOR, Spreader
17	87682385	2	BOLT,
18	87681210	1	NUT, Hex, M8, Cl 10,
19	A33497	2	PIN, LINCH,
20	427336A1	2	CABLE,
21	87705426	2	DEFLECTOR, Spreader
22	857-8025	2	BOLT, Hex Flg, M8 x 25, 10.9,
23	84163222	1	BELT, Spreader Drive
24	87735652	1	PULLEY, Straw Spreader Drive
25	413-516	5	BOLT, Hex, 5/16"-18 x 1", G5, Full Thd,
26	492-11031	5	WASHER, LOCK, 5/16",
27	425-105	5	NUT, 5/16"-18, G5,
28	87648715	2	COUPLING, Detent, Straw Spreader
29	87656139	2	BOLT,
30	87547587	2	NUT,
31	140189A1	2	DISC, Straw Spreader
32	87726623	3	BAT, Curved, Spreader, Left Hand
32	87726624	3	BAT, Curved, Spreader, Right Hand
33	87698833	6	BOLT,
34	188218C6	2	CONE, Straw Spreader Support
35	87698833	2	BOLT,
36	131-440	2	NUT,

PDF created with pdfFactory trial version www.pdffactory.com

09F-08 STRAW SPREADER

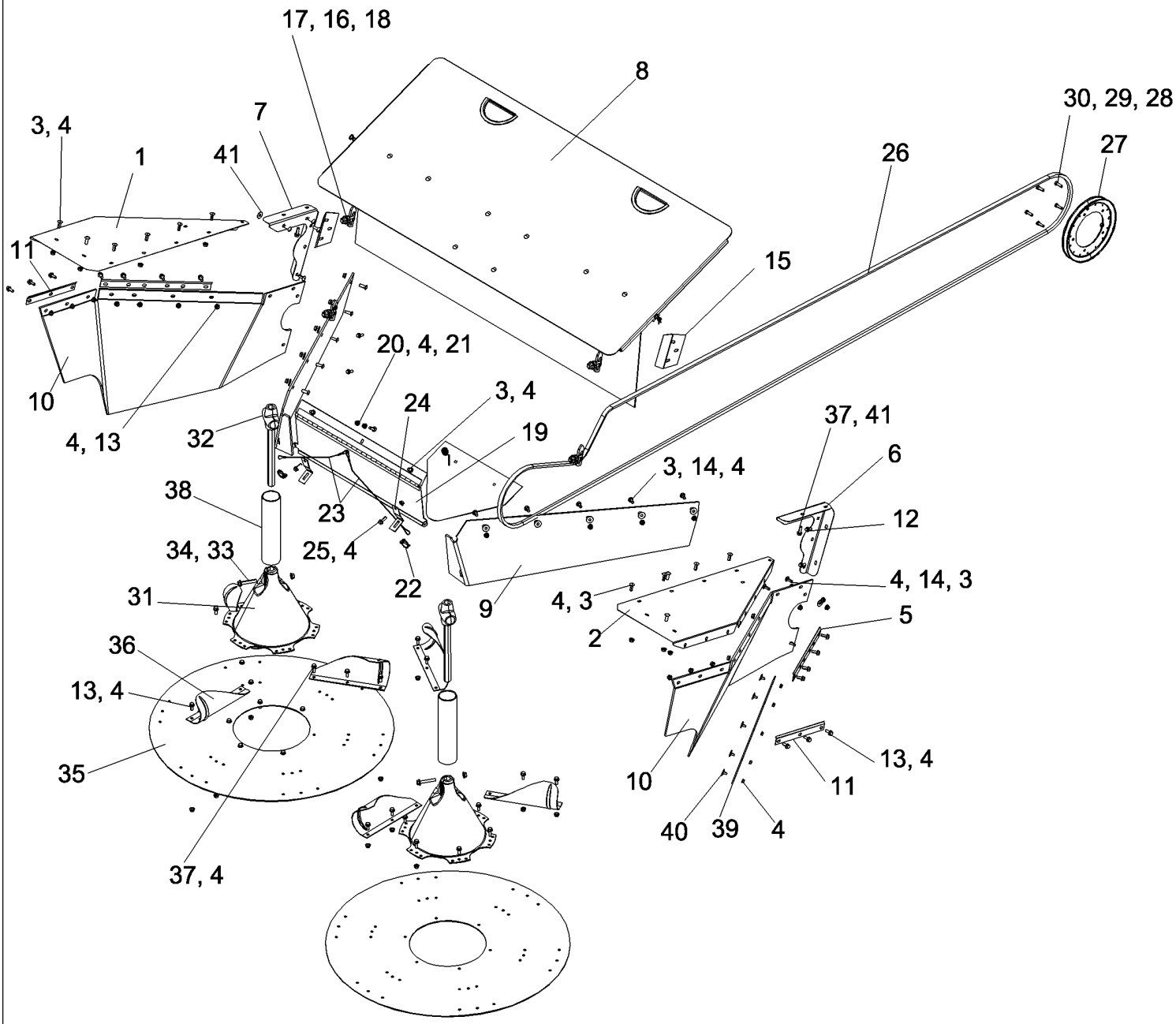

PDF created with pdfFactory trial version www.pdffactory.com

7088 AXIAL-FLOW COMBINE (EU) (4/08-)

09F-08 STRAW SPREADER

ссылка	Номер детали	Кол-во	Описание
1	87478154	1	BRACKET, Straw Spreader, Left Hand
2	87478152	1	BRACKET, Straw Spreader, Right Hand
3	87682384	32	BOLT,
4	86507066	85	NUT, M8 x 1.25, Flg, Cl 10,
5	87652036	2	BRACKET, Straw Spreader Shield
6	87686615	1	BRACKET, Straw Spreader Seals, Right Hand
7	87686616	1	BRACKET, Straw Spreader Seals, Left Hand
8	NSS	1	NOT SERVICED SEPARATELY, DRIBBLE PAN ASSEMBLY, Straw Spreader, See Figure 09F-10
9	87732802	2	SEAL, Straw Spreader
10	87478159	2	SEAL, Straw Spreader
11	87652033	2	BRACKET, Straw Spreader Shield
12	86625200	4	SCREW, SELF TAPPING, Hex Flg Hd, M8 x 20,
13	87656137	32	BOLT, Hex Flg, M8 x 20, 10.9, Full Thd,
14	495-81116	18	WASHER, .344" x 1" x .060",
15	87701981	2	PLATE ASSY., Straw Spreader Seal
16	86511324	8	WASHER, M12 x 24 x 2.5,
17	87702314	4	PIN ASSY., Latch
18	86512497	4	NUT, M12 x 1.75, Flg, Cl 10,
19	87705042	1	DEFLECTOR, Straw Spreader
20	87682385	1	BOLT,
21	87681210	1	NUT, Hex, M8, Cl 10,
22	A33497	2	PIN, LINCH,
23	427336A1	2	CABLE,
24	87705426	2	DEFLECTOR, Straw Spreader
25	857-8025	2	BOLT, Hex Flg, M8 x 25, 10.9,
26	84163222	1	BELT, Straw Spreader Drive
27	87735652	1	PULLEY, Straw Spreader Drive
28	413-516	5	BOLT, Hex, 5/16"-18 x 1", G5, Full Thd,
29	492-11031	5	WASHER, LOCK, 5/16",
30	425-105	5	NUT, 5/16"-18, G5,
31	188218C6	2	CONE, Straw Spreader Support
32	87648715	2	COUPLING, Straw Spreader
33	87656139	2	BOLT,
34	87547587	2	NUT,
35	140189A1	2	DISC, Straw/Chaff Spreader
36	87726623	3	BAT, Curved Spreader, Left Hand
36	87726624	3	BAT, Curved Spreader, Right Hand
37	87698833	8	BOLT,
38	87751662	2	TUBE,
39	87478166	2	BRACKET, Straw Spreader

PDF created with pdfFactory trial version www.pdffactory.com

ссылка	Номер детали	Кол-во	Описание
40	84131718	10	STUD,
41	131-440	2	NUT,

PDF created with pdfFactory trial version www.pdffactory.com

09F-09 DRIBBLE PAN ASSEMBLY, STRAW AND CHAFF SPREADER

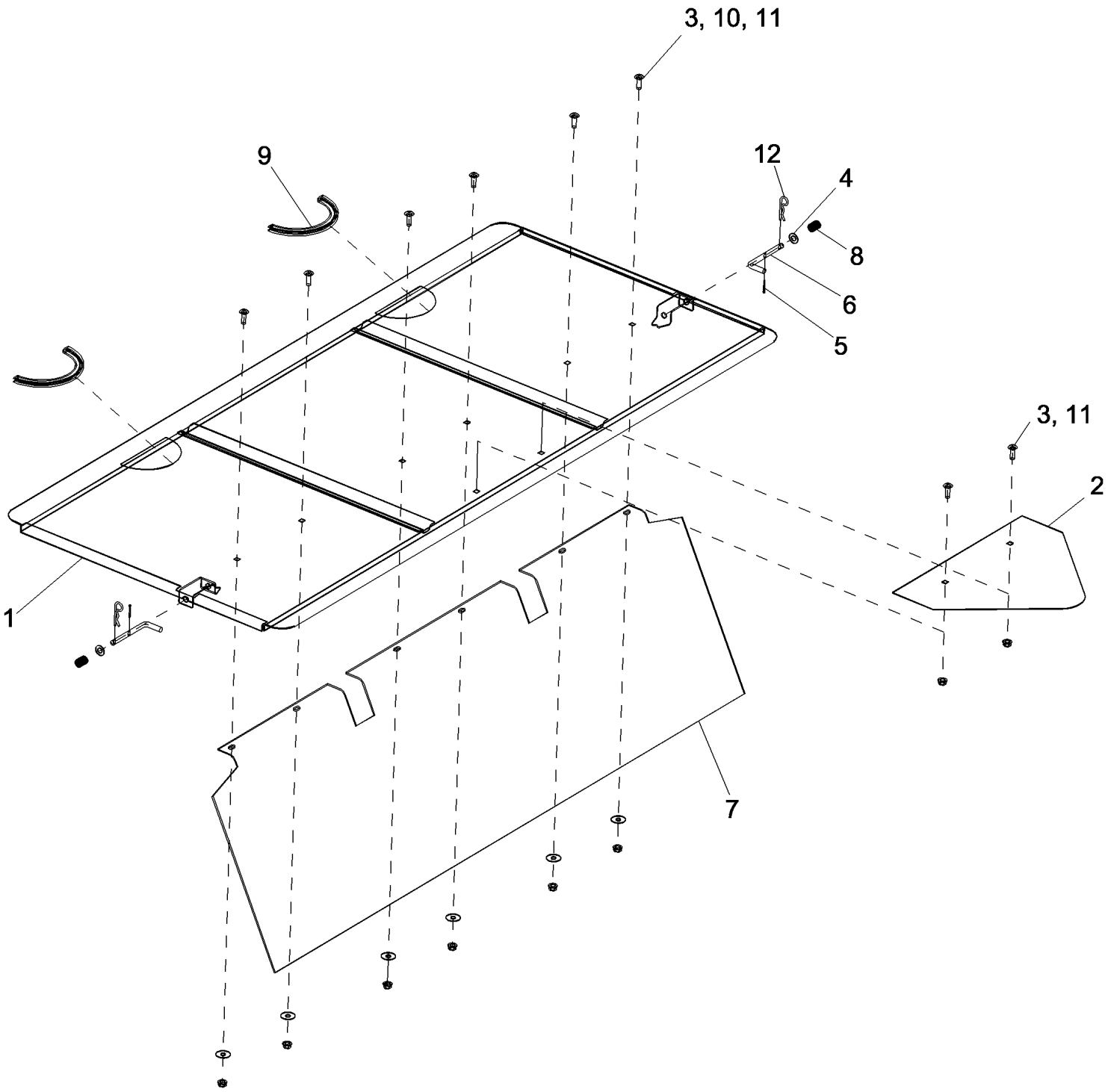

PDF created with pdfFactory trial version www.pdffactory.com

7088 AXIAL-FLOW COMBINE (EU) (4/08-)

09F-09 DRIBBLE PAN ASSEMBLY, STRAW AND CHAFF SPREADER

ссылка	Номер детали	Кол-во	Описание
1	87732717	1	PAN ASSY., Residue
2	87657179	1	DEFLECTOR, Tailgate Chaff Spreader
3	308761	8	BOLT, CARRIAGE, Short NK, M8 x 25, Cl8.8, Full Thd,
4	495-11041	2	WASHER, 3/8", SAE,
5	432-612	2	PIN, SPLIT (COTTER), 3/32" x 3/4",
6	186736C3	2	ROD, Tailgate Lock
7	87683018	1	SEAL, Residue Pan
8	540815R2	2	SPRING, Compression Ratchet Hub Pawl
9	135370A1	2	STRIP, PROTECTION,
10	87013865	6	WASHER, M8 x 28 x 1.6,
11	9804277	8	NUT, M8 x 1.25, Flg, Cl 8,
12	586591R1	2	PIN, SPLIT (COTTER),

PDF created with pdfFactory trial version www.pdffactory.com

09F-10 DRIBBLE PAN ASSEMBLY, STRAW SPREADER

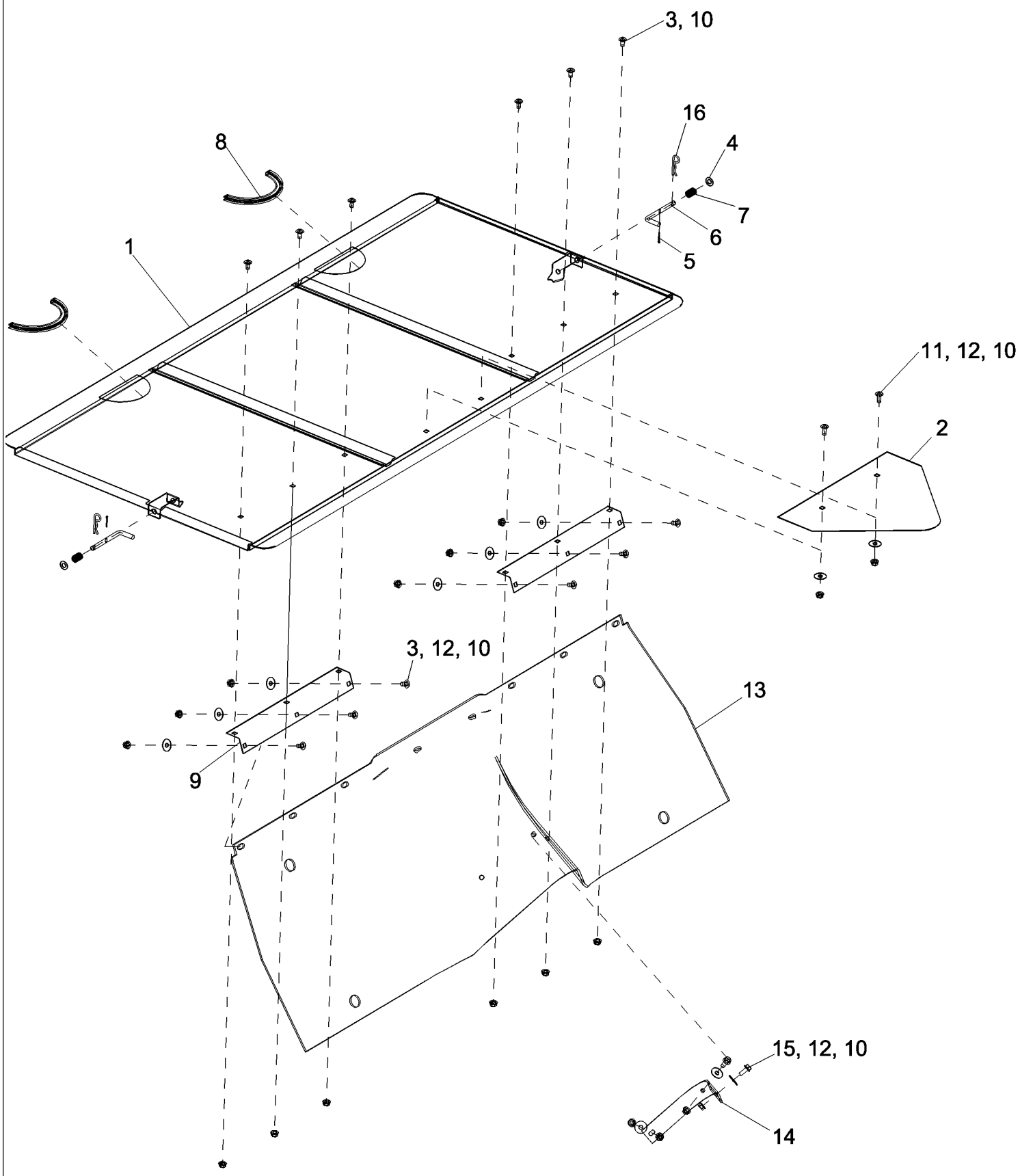

PDF created with pdfFactory trial version www.pdffactory.com

7088 AXIAL-FLOW COMBINE (EU) (4/08-)

09F-10 DRIBBLE PAN ASSEMBLY, STRAW SPREADER

ссылка	Номер детали	Кол-во	Описание
1	87732720	1	PAN ASSY., Residue
2	87657179	1	DEFLECTOR, Tailgate Chaff Spreader
3	86619060	12	BOLT, CARRIAGE, Short NK, M8 x 16, Cl8.8, Full Thd,
4	495-11041	2	WASHER, 3/8", SAE,
5	432-612	2	PIN, SPLIT (COTTER), 3/32" x 3/4",
6	186736C3	2	ROD, Tailgate Lock
7	540815R2	2	SPRING, Compression Ratchet Hub Pawl
8	135370A1	2	STRIP, PROTECTION,
9	87685897	2	BRACKET, Dribble Sheet Shield
10	9804277	17	NUT, M8 x 1.25, Flg, Cl 8,
11	86507486	2	BOLT, CARRIAGE, Short NK, M8 x 20, Cl8.8, Full Thd,
12	87013865	11	WASHER, M8 x 28 x 1.6,
13	87684740	1	SEAL, Cleaning Shoe Door
14	87300945	1	STRAP,
15	844-8020	3	BOLT, Hex Flg, M8 x 20, 8.8,
16	586591R1	2	PIN, SPLIT (COTTER),

PDF created with pdfFactory trial version www.pdffactory.com

09F-11 STRAW CHOPPER, STANDARD

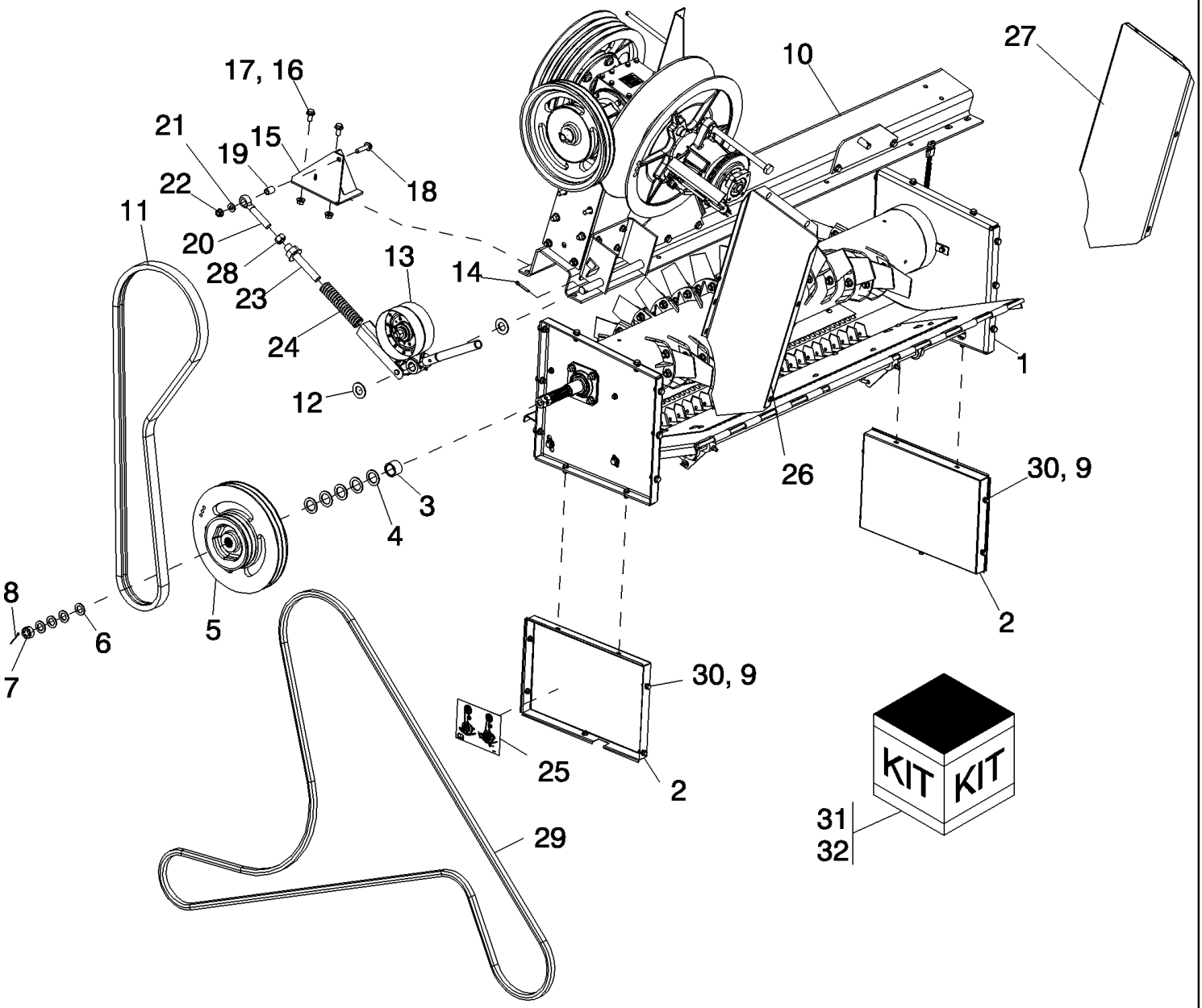

PDF created with pdfFactory trial version www.pdffactory.com

7088 AXIAL-FLOW COMBINE (EU) (4/08-)

09F-11 STRAW CHOPPER, STANDARD

ссылка	Номер детали	Кол-во	Описание
1	NSS	1	NOT SERVICED SEPARATELY, CHOPPER BODY, Fixed Blade, See Figure 09F-13
2	87753814	2	SHEET, Chopper Beater Filler
3	87614520	1	SPACER, Chopper Driven Pulley
4	87629040	5	WASHER,
5	87735266	1	PULLEY, Chopper Drive
6	87629039	4	WASHER,
7	425-1314	1	NUT, SLOTTED, 7/8"-14, G5,
8	432-828	1	PIN, SPLIT (COTTER), 1/8" x 1 3/4",
9	86507066	10	NUT, M8 x 1.25, Flg, Cl 10,
10	NSS	1	NOT SERVICED SEPARATELY, SUPPORT ASSEMBLY, Separator Jackshaft, Chopper, See Figure 09F-16
11	87330903	1	BELT, Chopper Drive
12	495-11106	2	WASHER, 1", SAE,
13	NSS	1	NOT SERVICED SEPARATELY, LEVER ASSEMBLY, Chopper Drive Idler, See Figure 09F-17
14	432-1624	1	PIN, SPLIT (COTTER), 1/4" x 1 1/2",
15	87389870	1	SUPPORT ASSY., Right Hand Chopper Drive Shield
16	87343550	2	BOLT,
17	86512497	2	NUT, M12 x 1.75, Flg, Cl 10,
18	87670764	1	BOLT,
19	87036416	1	SPACER, 3/4" Pipe x 1 1/16",
20	1315259C1	1	BOLT, Tension Rod
21	496-21053	1	WASHER, 17/32" x 1 1/16" x .134",
22	87681209	1	NUT,
23	87566525	1	PIN ASSY., Tension Rod
24	87564865	1	SPRING, Idler Tension Chopper Drive
25	175788A1	1	DECAL, Straw Chopper Drive
26	182949C2	1	DEFLECTOR, Discharge, Right Hand
27	182948C2	1	DEFLECTOR, Discharge, Left Hand
28	425-1012	1	NUT, 3/4"-10, G5,
29	181055C1	1	BELT, Cleaning System Drive With Chopper
30	87656137	10	BOLT, Hex Flg, M8 x 20, 10.9, Full Thd,
31	84193892	1	PACKAGE,SERVICE, DIA, Chopper, Heavy Duty, 5088
32	84166663	1	PACKAGE, CONVERSION, DIA, Chopper, Heavy Duty, 6088, 7088

PDF created with pdfFactory trial version www.pdffactory.com

09F-12 STRAW CHOPPER, 6 ROW FLAIL

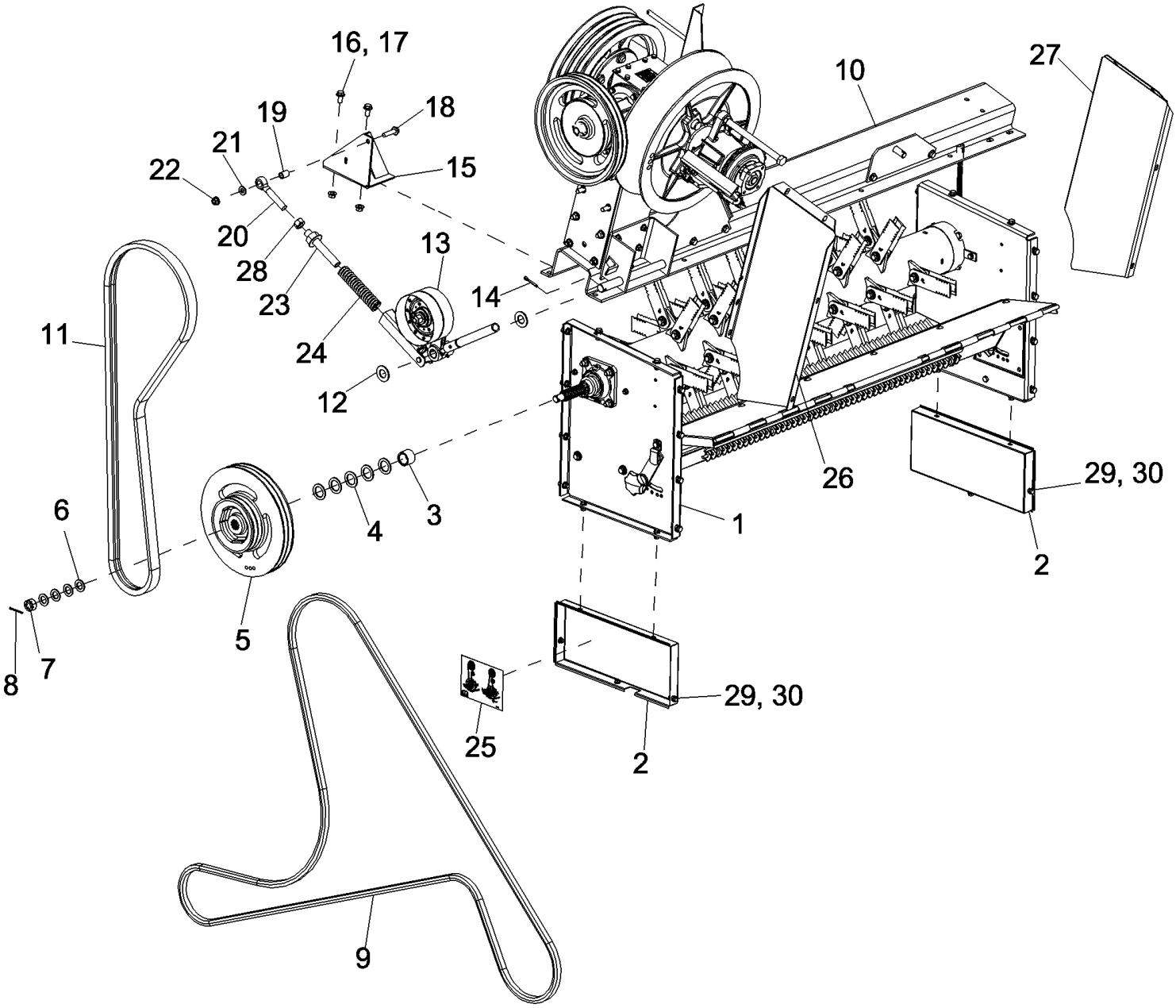

PDF created with pdfFactory trial version www.pdffactory.com

7088 AXIAL-FLOW COMBINE (EU) (4/08-)

09F-12 STRAW CHOPPER, 6 ROW FLAIL

ссылка	Номер детали	Кол-во	Описание
1	NSS	1	NOT SERVICED SEPARATELY, CHOPPER BODY, 6 Row Flail, See Figure 09F-15
2	87757116	2	SUPPORT, Chopper Beater Filler
3	87614520	1	SPACER, Chopper Driven Pulley
4	87629040	5	WASHER,
5	87735266	1	PULLEY, Chopper Drive
6	87629039	4	WASHER,
7	425-1314	1	NUT, SLOTTED, 7/8"-14, G5,
8	432-828	1	PIN, SPLIT (COTTER), 1/8" x 1 3/4",
9	181055C1	1	BELT, Cleaning System Drive With Chopper
10	NSS	1	NOT SERVICED SEPARATELY, SUPPORT ASSEMBLY, Separator Jackshaft, Chopper, See Figure 09F-16
11	87330903	1	BELT, Chopper Drive
12	495-11106	2	WASHER, 1", SAE,
13	NSS	1	NOT SERVICED SEPARATELY, LEVER ASSEMBLY, Chopper Drive Idler, See Figure 09F-17
14	432-1624	1	PIN, SPLIT (COTTER), 1/4" x 1 1/2",
15	87389870	1	SUPPORT ASSY., Right Hand Chopper Drive Shield
16	87343550	2	BOLT,
17	86512497	2	NUT, M12 x 1.75, Flg, Cl 10,
18	87670764	1	BOLT,
19	87036416	1	SPACER, 3/4" Pipe x 1 1/16",
20	1315259C1	1	BOLT, Tension Rod
21	496-21053	1	WASHER, 17/32" x 1 1/16" x .134",
22	87681209	1	NUT,
23	87566525	1	PIN ASSY., Tension Rod
24	87564865	1	SPRING, Idler Tension Chopper Drive
25	175788A1	1	DECAL, Straw Chopper Drive
26	1347215C1	1	SUPPORT, Discharge, Right Hand
27	1347214C1	1	SUPPORT, Discharge, Left Hand
28	425-1012	1	NUT, 3/4"-10, G5,
29	87656137	6	BOLT, Hex Flg, M8 x 20, 10.9, Full Thd,
30	86507066	6	NUT, M8 x 1.25, Flg, Cl 10,

PDF created with pdfFactory trial version www.pdffactory.com

09F-13 CHOPPER BODY, FIXED BLADE, STANDARD

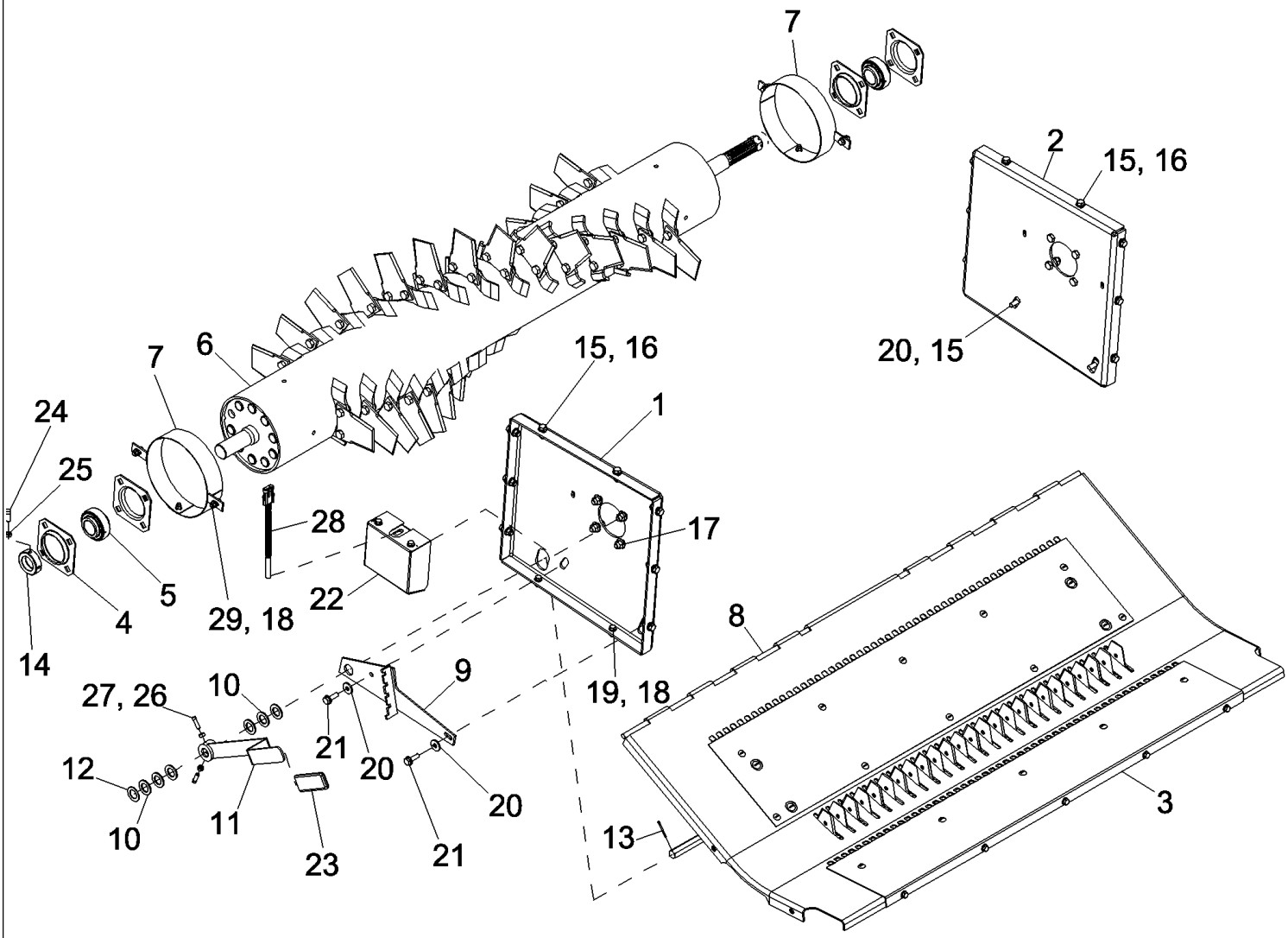

PDF created with pdfFactory trial version www.pdffactory.com

7088 AXIAL-FLOW COMBINE (EU) (4/08-)

09F-13 CHOPPER BODY, FIXED BLADE, STANDARD

ссылка	Номер детали	Кол-во	Описание
1	87649793	1	SUPPORT ASSY., Chopper, Left Hand
2	87649796	1	SUPPORT ASSY., Chopper, Right Hand
3	NSS	1	NOT SERVICED SEPARATELY, CHOPPER BOTTOM SUB, See Figure 09F-14
4	1307583C1	4	FLANGE, 80 mm, 4 Bolt
5	455111R91	2	BEARING, BALL,
6	84139832	1	ROTOR ASSY., Straw Chopper
7	87693310	2	SUPPORT ASSY., Chopper Drum Wrap With Hardware
8	182980C1	1	ROD, Hinge
9	87735186	1	PLATE, Chopper Adjust Detent
10	495-81057	6	WASHER, 29/32" x 1 1/2" x .120",
11	87735079	1	SHAFT, Chopper Adjust
12	495-81056	1	WASHER, 29/32" x 1 1/2" x .060",
13	432-820	1	PIN, SPLIT (COTTER), 1/8" x 1 1/4",
14	87313329	1	COLLAR,
15	87698836	18	BOLT,
16	86050279	16	NUT, M10 x 1.5, Flg, Cl 10,
17	87681209	8	NUT,
18	87656137	8	BOLT, Hex Flg, M8 x 20, 10.9, Full Thd,
19	86507066	4	NUT, M8 x 1.25, Flg, Cl 10,
20	496-41041	4	WASHER, 13/32" x 1 1/8" x .134",
21	87698837	2	BOLT,
22	NSS	1	NOT SERVICED SEPARATELY, SHIELDS, Chopper, Left Hand, See Figure 09F-21
23	402987A1	1	GRIP, Chopper Adjust
24	86542823	1	SET SCREW, Sq Hd, 3/8"-16 x 7/8",
25	425-146	1	NUT, Jam, 3/8"-16, G5,
26	485-13116	2	SET SCREW, Sq Hd, 5/16"-18 x 1", Cup pt,
27	425-105	2	NUT, 5/16"-18, G5,
28	87650675	1	SENSOR, 12 mm, Hall rpm
29	87681210	4	NUT, Hex, M8, Cl 10,

PDF created with pdfFactory trial version www.pdffactory.com

7088 AXIAL-FLOW COMBINE (EU) (4/08-)

09F-14 CHOPPER BOTTOM SUB, STANDARD

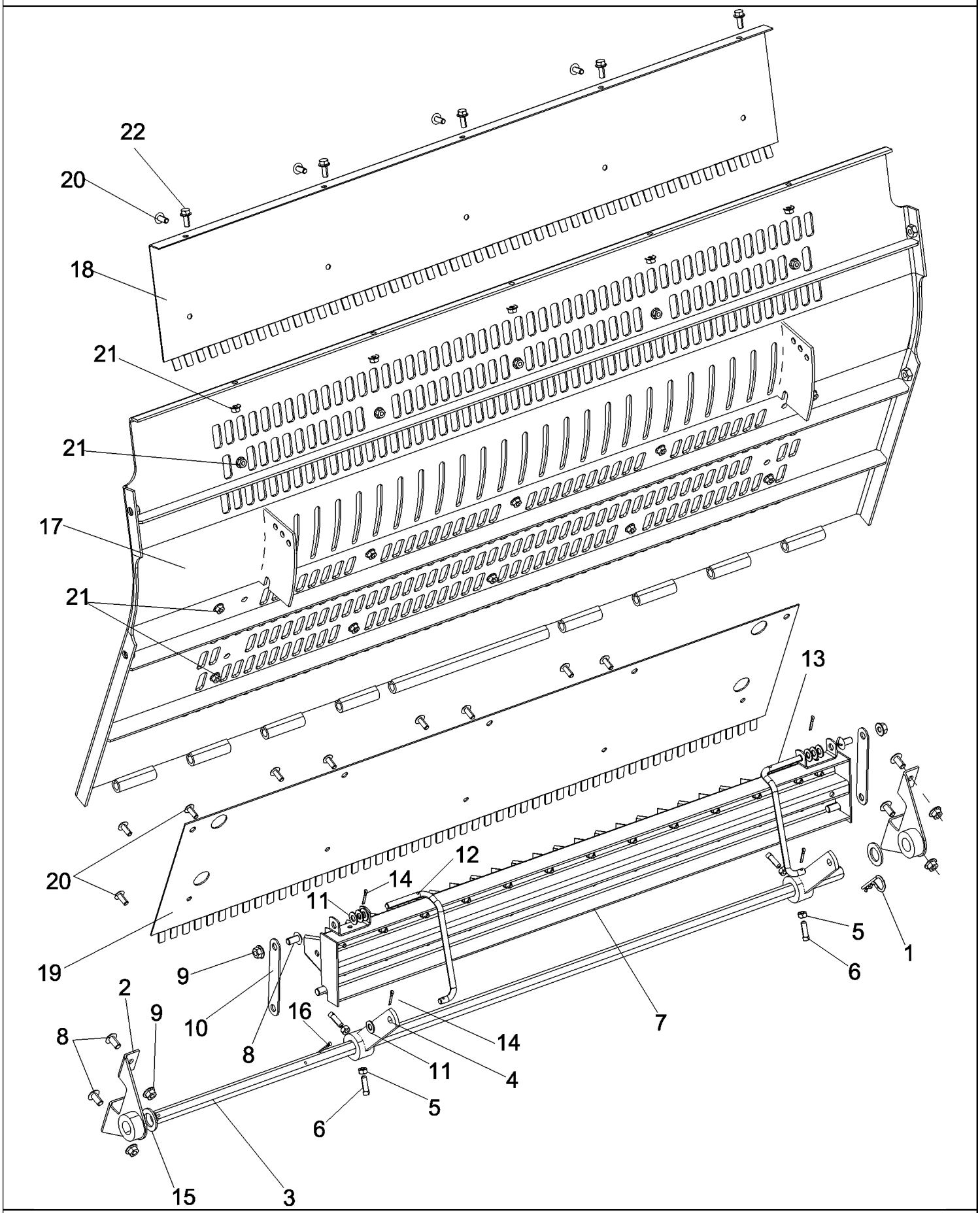

PDF created with pdfFactory trial version www.pdffactory.com

7088 AXIAL-FLOW COMBINE (EU) (4/08-)

09F-14 CHOPPER BOTTOM SUB, STANDARD

ссылка	Номер детали	Кол-во	Описание
1	480523R1	1	SPLIT PIN/SAFETY PIN,
2	87379134	2	SUPPORT ASSY., Chopper Adjustment
3	391221A1	1	SHAFT, Chopper Adjustment
4	391230A1	2	PIVOT, Arm Assembly, Chopper Adjustment
5	425-105	4	NUT, 5/16"-18, G5,
6	485-13116	4	SET SCREW, Sq Hd, 5/16"-18 x 1", Cup pt,
7	87323280	1	PACKAGE, Chopper Concave
8	87573369	6	SCREW,
9	825-51410	6	NUT, M10, Flg Ser,
10	391218A1	2	STRAP, Retainer
11	495-11041	8	WASHER, 3/8", SAE,
12	391222A1	1	ROD, Chopper Adjustment
13	395513A1	1	ROD, Chopper Adjustment, Right Hand
14	432-812	4	PIN, SPLIT (COTTER), 1/8" x 3/4",
15	495-81057	2	WASHER, 29/32" x 1 1/2" x .120",
16	432-820	1	PIN, SPLIT (COTTER), 1/8" x 1 1/4",
17	87746115	1	BOTTOM, Chopper
18	87746086	1	COVER, Chopper Concave
19	87746089	1	COVER, Chopper Concave
20	847-3820	15	SCREW, Sltd Tr Hd, M8 x 20, 10.9, Serr,
21	825-5148	20	NUT, M8, Flg Ser,
22	87656137	5	BOLT, Hex Flg, M8 x 20, 10.9, Full Thd,

PDF created with pdfFactory trial version www.pdffactory.com

09F-15 CHOPPER BODY, 6 ROW FLAIL

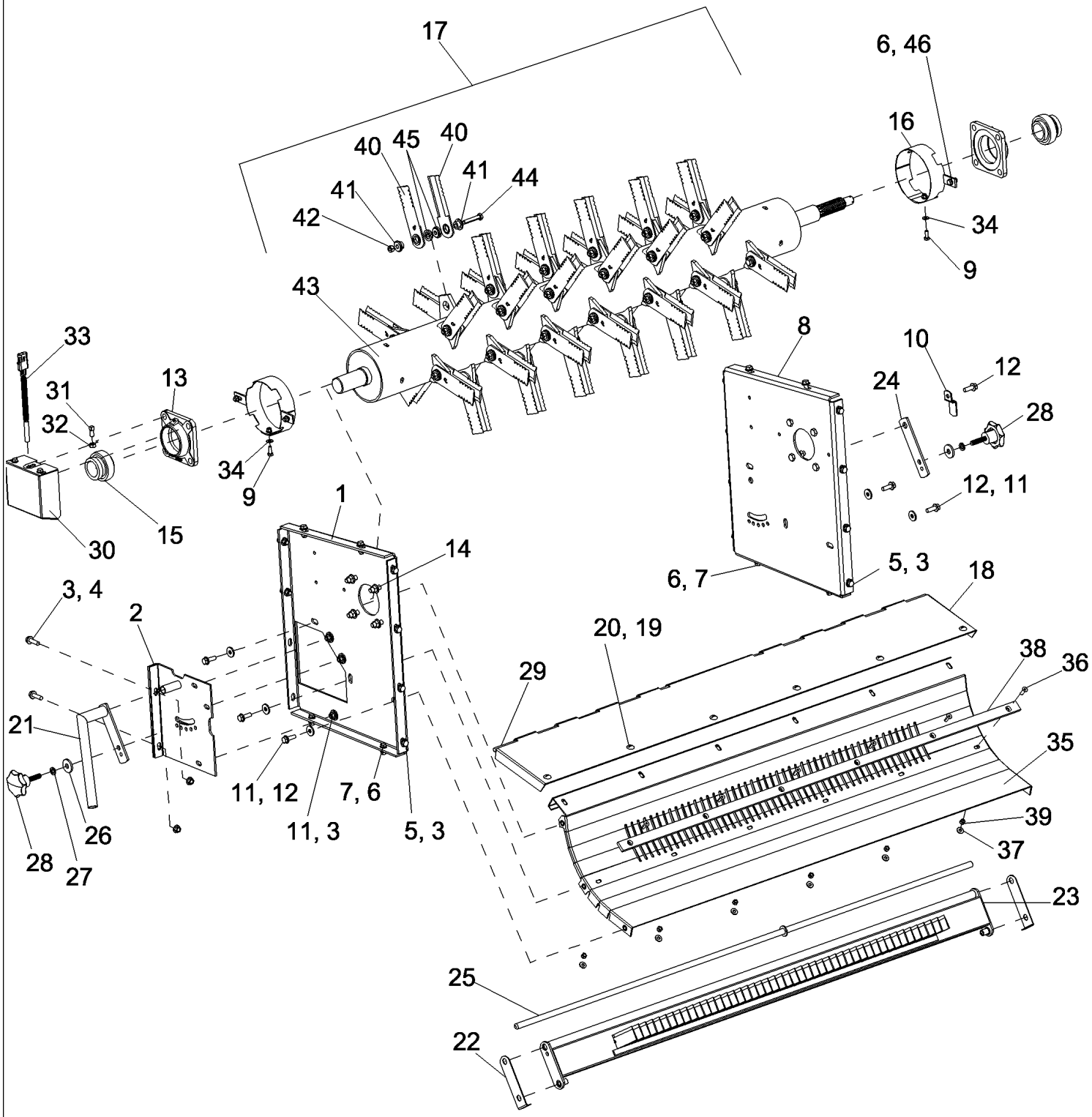

PDF created with pdfFactory trial version www.pdffactory.com

7088 AXIAL-FLOW COMBINE (EU) (4/08-)

09F-15 CHOPPER BODY, 6 ROW FLAIL

ссылка	Номер детали	Кол-во	Описание
1	87589802	1	SUPPORT ASSY., Side, Left Hand
2	87585119	1	PLATE ASSY., Access Cover
3	86050279	23	NUT, M10 x 1.5, Flg, Cl 10,
4	87698838	2	BOLT,
5	87698836	18	BOLT,
6	87656137	8	BOLT, Hex Flg, M8 x 20, 10.9, Full Thd,
7	86507066	4	NUT, M8 x 1.25, Flg, Cl 10,
8	87589800	1	SUPPORT ASSY., Side, Right Hand
9	120104	2	BOLT, Hex, M8 x 20, 8.8,
10	140527A1	1	LATCH ASSY., Right Hand
11	496-41041	8	WASHER, 13/32" x 1 1/8" x .134",
12	87698837	6	BOLT,
13	87585121	2	HOUSING, Bearing
14	829-2412	8	NUT, M12 x 1.75, Flg, Cl 10,
15	87585122	2	BEARING ASSY,
16	87681530	2	SUPPORT ASSY.,
17	87585115	1	CHOPPER, STRAW, Inc. 40 - 45
18	1347207C1	1	DOOR, Chopper Bottom
19	87573369	6	SCREW,
20	825-51410	6	NUT, M10, Flg Ser,
21	140525A1	1	HANDLE,
22	1322248C2	2	BLOCK, Right Hand
23	140961A1	1	SUPPORT, Fixed Knife
24	140760A1	1	LEVER,
25	140521A1	1	ROD,
26	495-81162	2	WASHER, 17/32" x 1 1/2" x .179",
27	892-11012	2	WASHER, LOCK, M12,
28	1322232C2	2	HANDLE,
29	182980C1	1	ROD, Hinge
30	NSS	1	NOT SERVICED SEPARATELY, SHIELDS, Chopper, Left Hand, See Figure 09F-21
31	87473296	1	SCREW,
32	84022934	1	NUT, M10 x 1, Cl 8,
33	87650675	1	SENSOR, 12 mm, Hall rpm
34	322358	2	WASHER, SPRING, Belleville, M8,
35	87585116	1	CONCAVE,
36	906035R1	6	SCREW, Hex Soc Flat Hd, M8 x 25, 10.9,
37	86629542	6	NUT, LOCK, M8 x 1.25, Cl 8,
38	87585123	1	STRIPPER,
39	86639316	6	WASHER,
40	87593795	76	
41	1994758C2	76	CENTERING RING,

PDF created with pdfFactory trial version www.pdffactory.com

ссылка	Номер детали	Кол-во	Описание
42	832-41310	38	NUT, LOCK, M10 x 1.5, Cl 10,
43	NSS	1	NOT SERVICED SEPARATELY, ROTOR
44	828-10055	38	BOLT, Hex, M10 x 55, 10.9,
45	1322242C1	76	SPACER,
46	87681210	4	NUT, Hex, M8, Cl 10,

PDF created with pdfFactory trial version www.pdffactory.com

09F-16 SUPPORT ASSEMBLY, SEPARATOR JACKSHAFT, CHOPPER

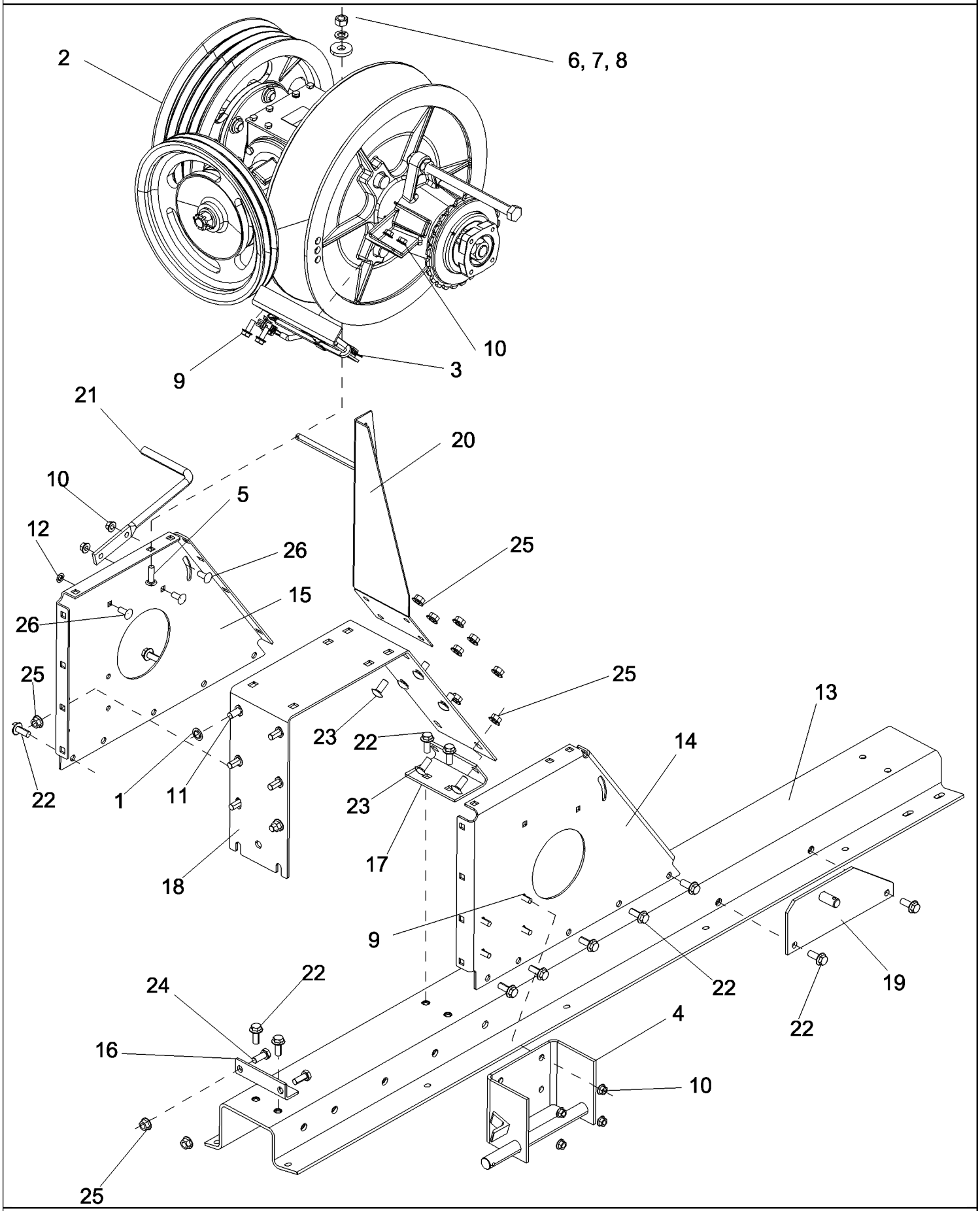

PDF created with pdfFactory trial version www.pdffactory.com

09F-16 SUPPORT ASSEMBLY, SEPARATOR JACKSHAFT, CHOPPER

ссылка	Номер детали	Кол-во	Описание
1	87698855	4	SCREW,
2	NSS	1	NOT SERVICED SEPARATELY, HOUSING ASSEMBLY, Chopper Drive, See Figure 09F-18 For 6088, 7088, See Figure 09F-19 For 5088
3	NSS	1	NOT SERVICED SEPARATELY, SWITCH KIT, Rotor Speed Limit, See Figure 04-27
4	1315251C1	1	SUPPORT, Idler Pivot Assembly
5	87495307	6	BOLT,
6	86592701	6	WASHER, M12 x 35 x 5, HT,
7	412123	6	WASHER, M12 x 21 x 2.6 Thk,
8	337475	6	NUT, M12, Cl 10,
9	87698836	6	BOLT,
10	86050279	8	NUT, M10 x 1.5, Flg, Cl 10,
11	87695427	4	SCREW,
12	87698854	1	SCREW,
13	87549534	1	CHANNEL, Separator Jackshaft Support
14	87393437	1	SUPPORT, Separator Jackshaft, Right Hand
15	87393438	1	SUPPORT, Separator Jackshaft, Left Hand
16	87757057	1	SUPPORT, Separator Jackshaft Support
17	87757061	1	SUPPORT, Separator Jackshaft
18	87393439	1	SUPPORT, Separator Jackshaft Top
19	87757085	1	GUIDE, Auxiliary Shift Handle
20	84137864	1	SUPPORT ASSY., Belt Guide Channel
21	87331545	1	ROD, Separator Belt Guide
22	87030508	16	BOLT, Hex Flg, M12 x 30, 10.9, Full Thd,
23	87695426	10	SCREW,
24	43260	2	BOLT, Hex, M12 x 30, 10.9,
25	86512497	12	NUT, M12 x 1.75, Flg, Cl 10,
26	87682391	3	BOLT, Short NK, M10 x 25, Cl 10.9,

PDF created with pdfFactory trial version www.pdffactory.com

09F-17 LEVER ASSEMBLY, CHOPPER DRIVE IDLER

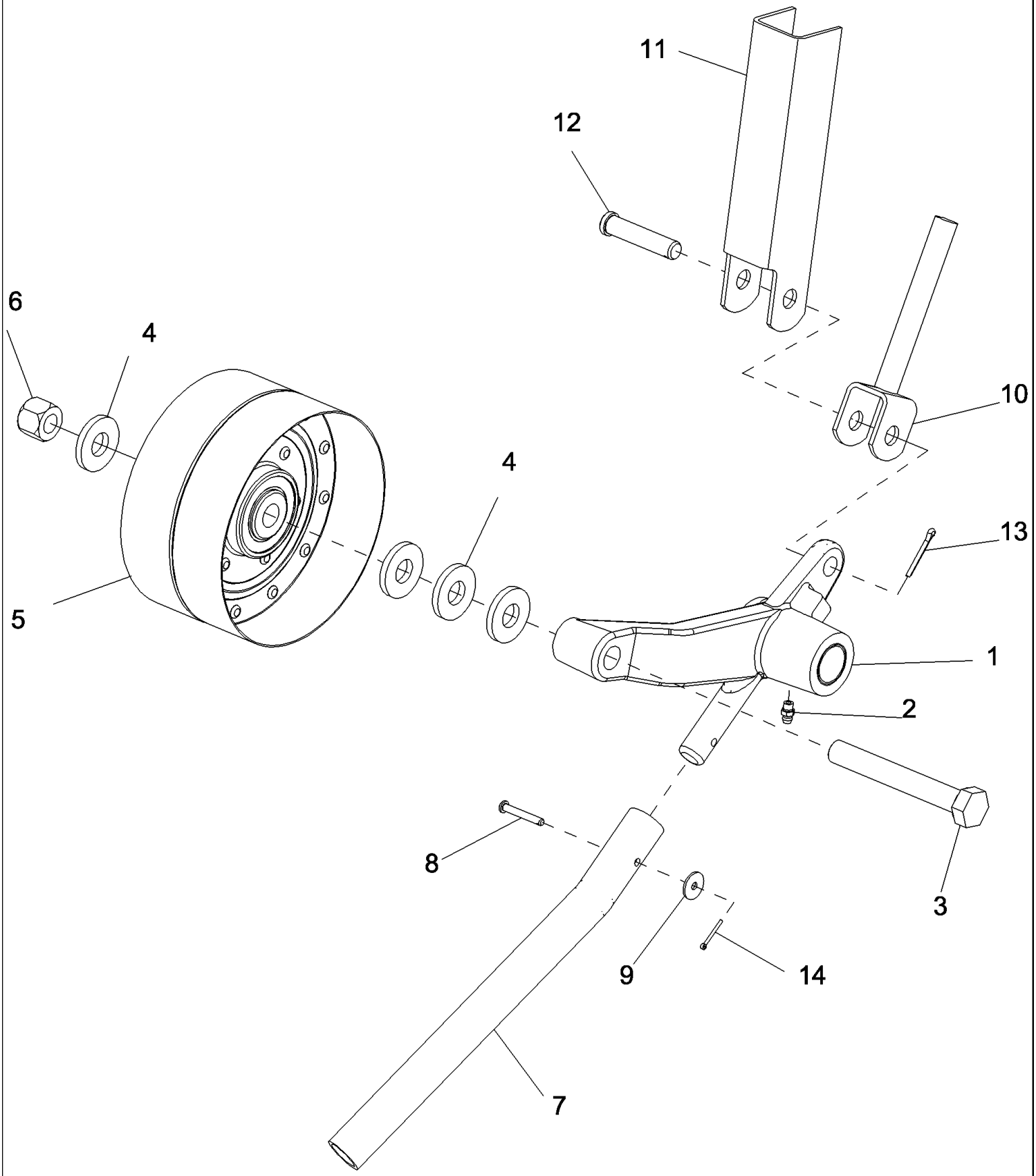

PDF created with pdfFactory trial version www.pdffactory.com

7088 AXIAL-FLOW COMBINE (EU) (4/08-)

09F-17 LEVER ASSEMBLY, CHOPPER DRIVE IDLER

ссылка	Номер детали	Кол-во	Описание
1	84146254	1	LEVER ASSY., Chopper Drive Idler
2	219-87	1	NIPPLE, LUBE, 1/4"-28 x .56" lg, Self-Tap,
3	413-1072	1	BOLT, Hex, 5/8"-11 x 4 1/2", G5,
4	496-41066	4	WASHER, 21/32" x 1 1/2" x .188", HDN,
5	84146249	1	PULLEY, Idler
6	232-41110	1	NUT, LOCK, 5/8"-11, GC,
7	84146241	1	TUBE, Idler Arm Lever
8	127-218	1	PIN, CLEVIS, 3/16" x 1 5/16",
9	495-61020	1	WASHER, 13/64" x 1/2" x .060",
10	1315256C1	1	ROD, Tension Rod Slider
11	84146244	1	CHANNEL, Idler Arm Lock
12	86837477	1	PIN, CLEVIS, 1/2" x 2 1/4'",
13	432-816	1	PIN, SPLIT (COTTER), 1/8" x 1",
14	9512667	1	PIN, SPLIT (COTTER), M2 x 20,

PDF created with pdfFactory trial version www.pdffactory.com

09F-18 HOUSING ASSEMBLY, CHOPPER DRIVE WITH PULLEYS - 6088, 7088

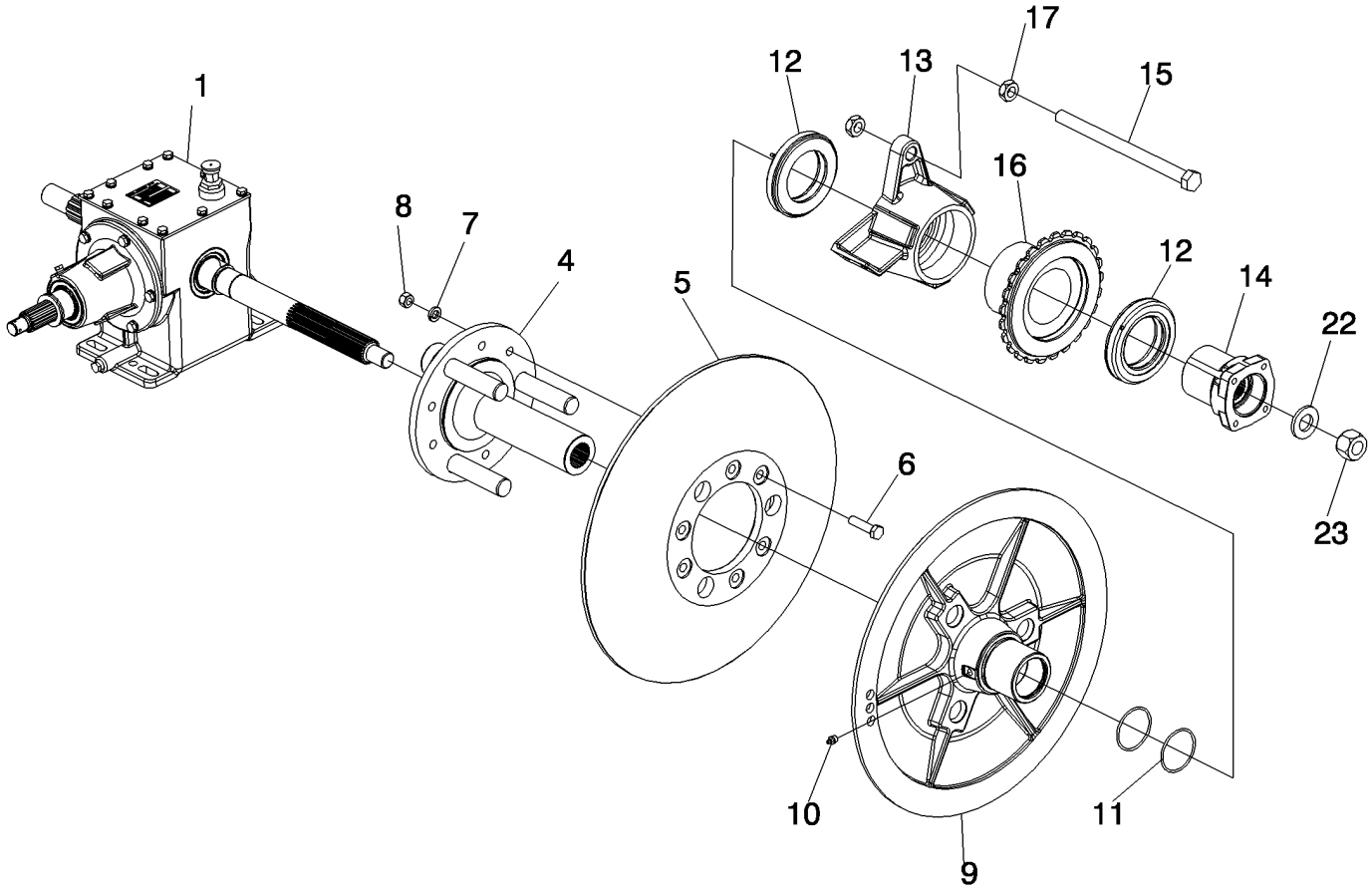

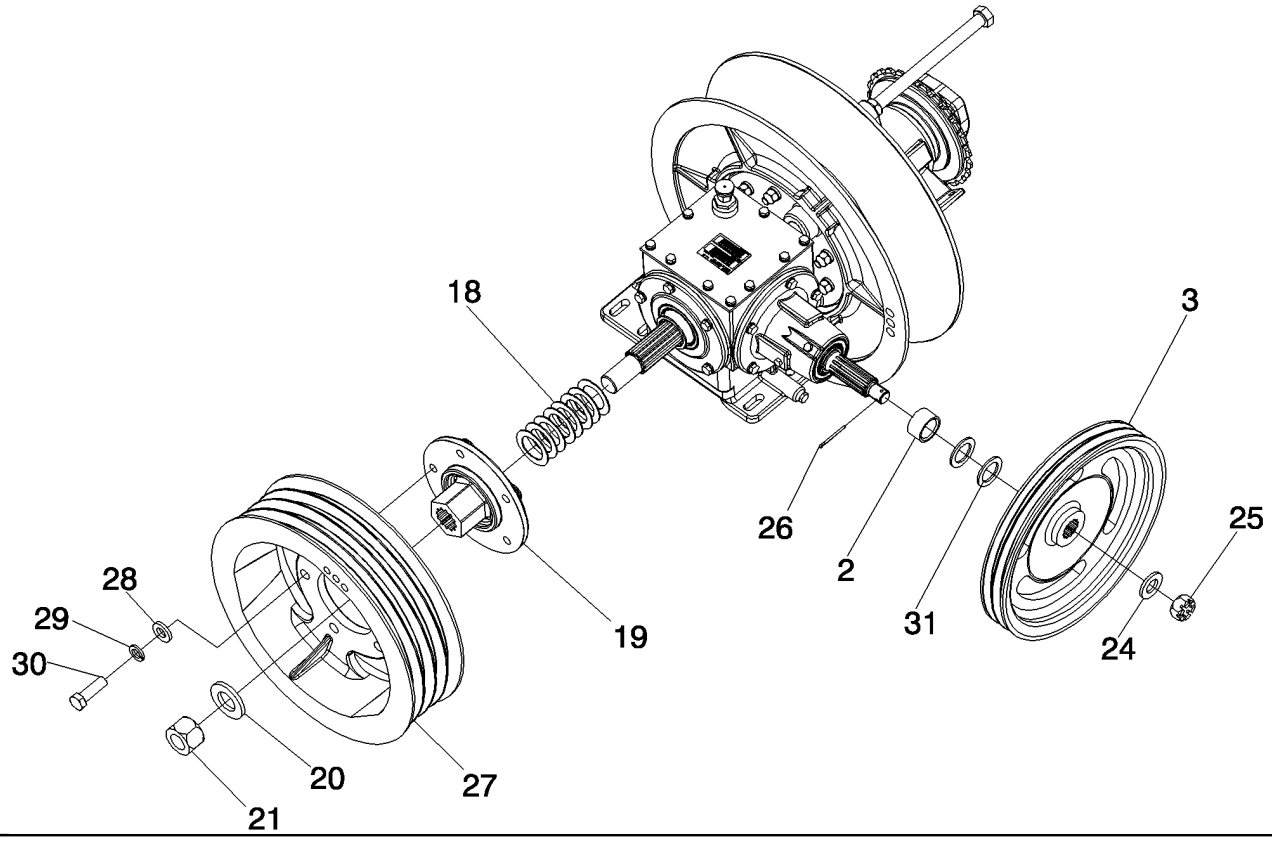

PDF created with pdfFactory trial version www.pdffactory.com

7088 AXIAL-FLOW COMBINE (EU) (4/08-)

09F-18 HOUSING ASSEMBLY, CHOPPER DRIVE WITH PULLEYS - 6088, 7088

ссылка	Номер детали	Кол-во	Описание
1	REF	1	INSTRUCTION, GEAR CASE ASSEMBLY, Chopper, See Figure 09F-20
2	87745589	1	SPACER, Chopper Driver Pulley
3	1315264C1	1	PULLEY, Chopper Drive
4	87307489	1	HUB CAP, Stationary, Rotor Drive
5	87602134	1	PULLEY, Rotor Drive Fixed
6	426-832	6	BOLT, Hex, 1/2"-13 x 2", G8,
7	492-21050	6	WASHER, LOCK, 1/2",
8	429-108	6	NUT, 1/2"-13, G8,
9	87307503	1	PULLEY ASSY., Rotor Drive Variable
10	219-86	1	NIPPLE, LUBE, 1/8" x .62" lg, Drive,
11	238-5230	2	O-RING, -230, 70 Duro, 2.484" ID x .139" Thk,
12	87307506	2	BEARING, BALL,
13	87307508	1	SLEEVE, Variator Pulley, Female
14	87307510	1	COUPLING, Universal Joint
15	413-12176	1	BOLT, Hex, 3/4"-10 x 11", G5,
16	87307512	1	SLEEVE, Variator Pulley, Male
17	425-1412	2	NUT, Jam, 3/4"-10, G5,
18	87313981	8	WASHER,
19	87677098	1	PULLEY ASSY., Separator Driven
20	87301675	1	WASHER, 1 3/8" x 2 1/2" x 1/4", HDN,
21	231-41120	1	NUT, LOCK, 1 1/4"-7, GB,
22	496-21106	1	WASHER, 1 1/16" x 2" x .209", Hardened
23	232-41316	1	NUT, LOCK, 1"-8, GC,
24	496-21094	1	WASHER, 15/16" x 1 3/4" x .179", HDN,
25	425-1314	1	NUT, SLOTTED, 7/8"-14, G5,
26	432-828	1	PIN, SPLIT (COTTER), 1/8" x 1 3/4",
27	87677105	1	PULLEY ASSY., Separator Driven
28	86639326	5	WASHER, M17.5 x 34 x 5, HT,
29	87016618	5	WASHER, LOCK, M16,
30	412398	5	BOLT, Hex, M16 x 50, 10.9,
31	87629040	2	WASHER,

PDF created with pdfFactory trial version www.pdffactory.com

09F-20 GEAR CASE ASSEMBLY, CHOPPER DRIVE

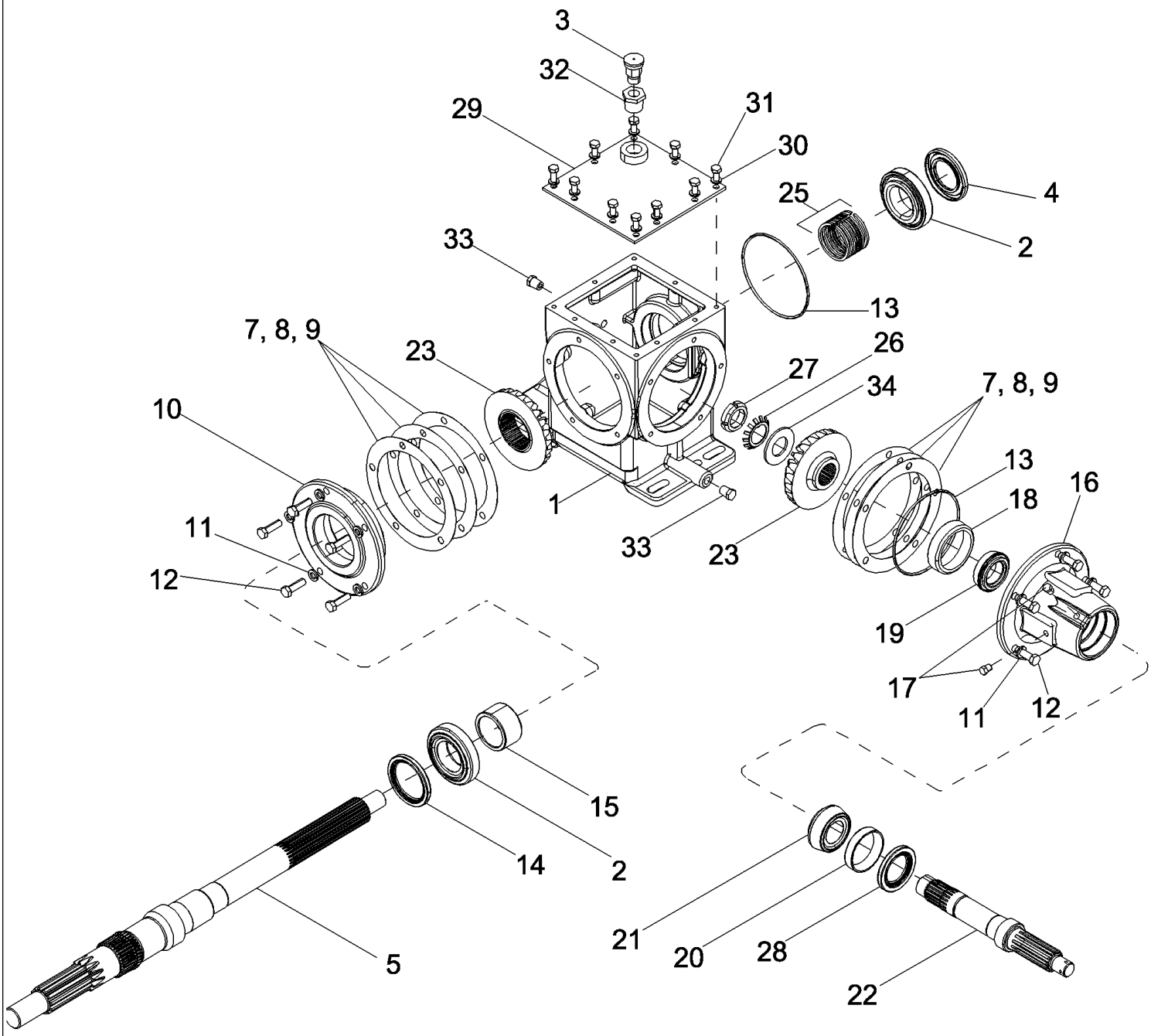

PDF created with pdfFactory trial version www.pdffactory.com

7088 AXIAL-FLOW COMBINE (EU) (4/08-)

09F-20 GEAR CASE ASSEMBLY, CHOPPER DRIVE

ссылка	Номер детали	Кол-во	Описание
1	181278C1	1	HOUSING, Separator Jackshaft
2	87341589	2	BEARING ASSY,
3	219-436	1	BREATHER, 3/8"-18 NPT, Short, w/washer,
4	181287C1	1	SEAL, Jackshaft Hub Foeward
5	87386758	1	SHAFT, Chopper Separator Jackshaft, 6088, 7088
5	87736433	1	SHAFT, Chopper Separator Jackshaft, 5088
6	195484C2	1	KIT, SHIM, Forward Drive Rear Bell Housing, Inc. 7 - 9
7	NSS	AR	NOT SERVICED SEPARATELY, SHIM, 0.005 mm, Forward Drive Rear Bell Housing
8	NSS	AR	NOT SERVICED SEPARATELY, SHIM, 0.007 mm, Forward Drive Rear Bell Housing
9	NSS	AR	NOT SERVICED SEPARATELY, SHIM, 0.020 mm, Forward Drive Rear Bell Housing
10	181274C1	1	HUB, Separator Drive Jackshaft Bearing
11	492-11038	10	WASHER, LOCK, 3/8",
12	413-620	10	BOLT, Hex, 3/8"-16 x 1 1/4", G5, Full Thd,
13	238-5250	2	O-RING, -250, 70 Duro, 4.984" ID x .139" Thk,
14	181288C1	1	SEAL, Jackshaft Hub, Rear
15	181269C1	1	SPACER, Separator Drive Jackshaft, Rear
16	191245C2	1	HUB, Forward Drive Bell, Rear
17	217-84	2	PLUG, Hex Hd, 1/8"-27, Brass,
18	17498D	1	BEARING, CUP,
19	1345296C1	1	BEARING ASSY,
20	618024R1	1	BEARING, CUP,
21	618023R91	1	BEARING, CONE,
22	181195C1	1	SHAFT, Chopper Drive
23	243333A1	1	GEAR, BEVEL, Chopper Drive, 23T/24T, Standard
23	87608658	1	GEAR SET, Chopper Drive, 28T/21T, Fast Speed
24	1315284C1	1	PACKAGE, Ring Drive Gear Snap, Inc. 25
25	181266C1	1	SNAP RING, Drive Gear, 0.135 mm
25	181265C1	1	SNAP RING, Drive Gear, 0.132 mm
25	181264C1	1	SNAP RING, Drive Gear, 0.129 mm
25	181263C1	1	SNAP RING, Drive Gear, 0.126 mm
25	181262C1	1	SNAP RING, Drive Gear, 0.123 mm
25	181261C1	1	SNAP RING, Drive Gear, 0.120 mm
25	181260C1	1	SNAP RING, Drive Gear, 0.117 mm
25	181259C1	1	SNAP RING, Drive Gear, 0.114 mm
25	181258C1	1	SNAP RING, Drive Gear, 0.111 mm
25	181257C1	1	SNAP RING, Drive Gear, 0.108 mm
25	181256C1	1	SNAP RING, Drive Gear, 0.105 mm
25	181255C1	1	RING, SNAP, Drive Gear, 0.102 mm
26	55-2006	1	WASHER, LOCK, Type TW-106,
27	54-2006	1	NUT, LOCK, Bearing, 1.1811" Bore,
28	192527C1	1	SEAL, Oil Forward Gear Case Input

PDF created with pdfFactory trial version www.pdffactory.com

7088 AXIAL-FLOW COMBINE (EU) (4/08-)

09F-20 GEAR CASE ASSEMBLY, CHOPPER DRIVE

ссылка	Номер детали	Кол-во	Описание
29	181281C1	1	COVER, Chopper Drive
30	492-11031	10	WASHER, LOCK, 5/16",
31	413-512	10	BOLT, Hex, 5/16"-18 x 3/4", G5, Full Thd,
32	144041	1	NUT, TUBE, 3/4" NPT Male x 3/8" NPT Fem,
33	217-405	2	PLUG, Hex Hd, 1/4"-18 NPTF,
34	396-11119	1	WASHER, 1 3/16" x 2 1/4" x .134", HDN,

PDF created with pdfFactory trial version www.pdffactory.com

7088 AXIAL-FLOW COMBINE (EU) (4/08-)

09F-21 STRAW CHOPPER SHIELD, LEFT HAND

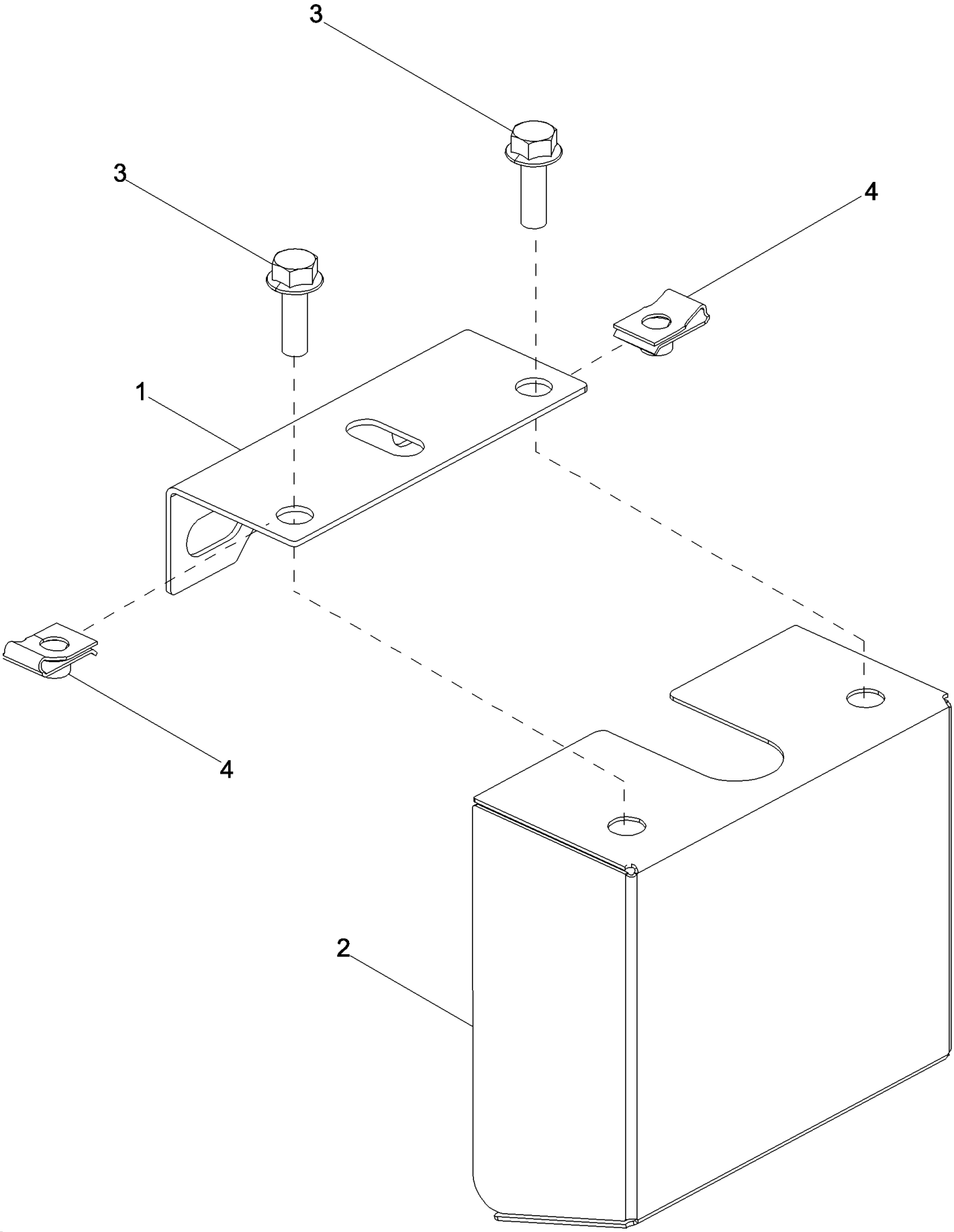

PDF created with pdfFactory trial version www.pdffactory.com

7088 AXIAL-FLOW COMBINE (EU) (4/08-)

09F-21 STRAW CHOPPER SHIELD, LEFT HAND

ссылка	Номер детали	Кол-во	Описание
1	87703786	1	BRACKET, Straw Chopper Sensor
2	87473361	1	COVER ASSY, Straw Chopper Shaft, Left Hand
3	87698833	2	BOLT,
4	86625074	2	NUT,

PDF created with pdfFactory trial version www.pdffactory.com

09G-01 CAB - FRAME AND WINDSHIELD

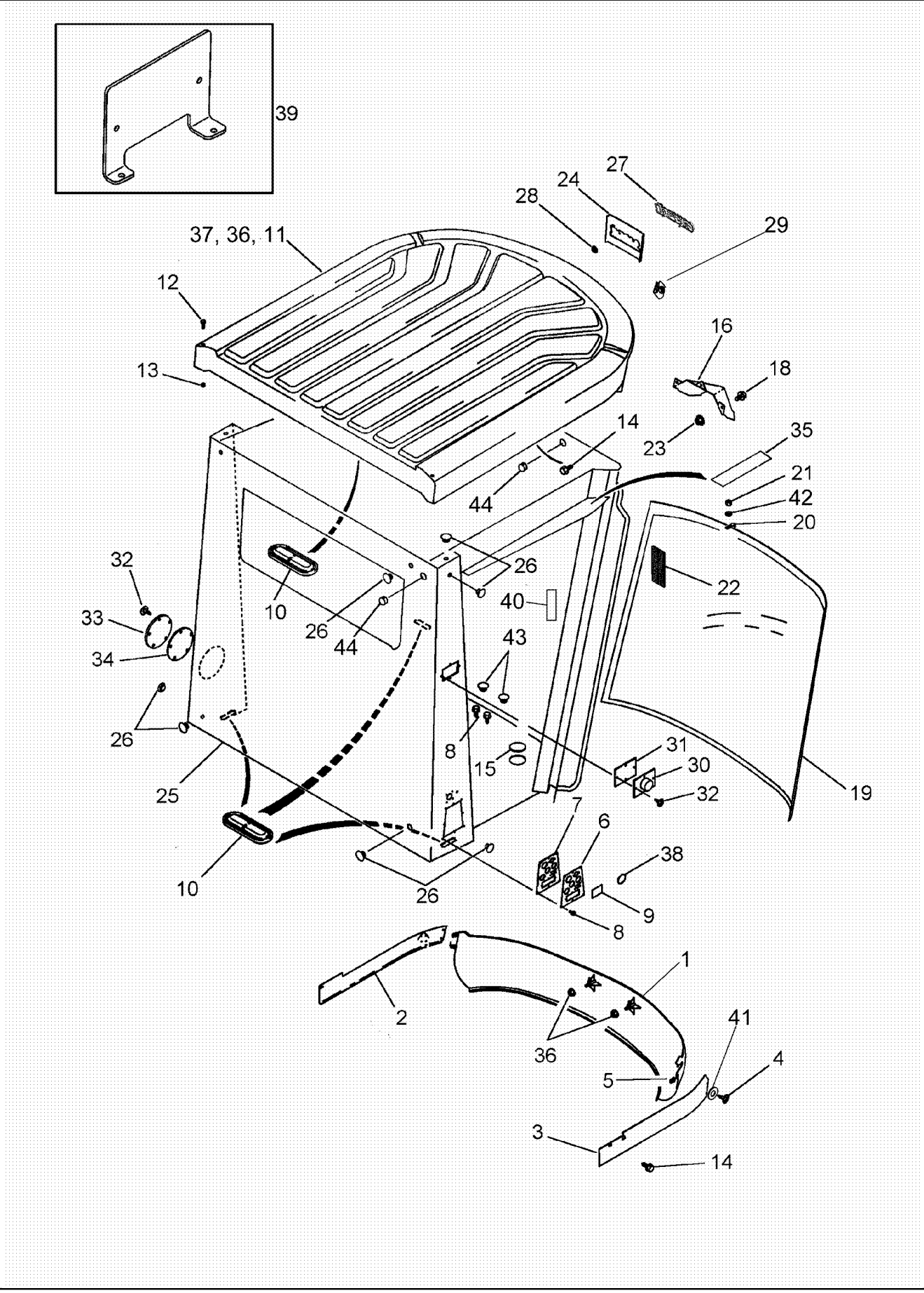

PDF created with pdfFactory trial version www.pdffactory.com

7088 AXIAL-FLOW COMBINE (EU) (4/08-)

09G-01 CAB - FRAME AND WINDSHIELD

ссылка	Номер детали	Кол-во	Описание
	87484407	1	CAB, Service
1	120140A2	1	COVER, Cab, Front
2	139597A2	1	COVER, Cab, Left Hand
3	139598A3	1	COVER, Cab, Right Hand
4	260-16516	6	SCREW, SELF TAPPING, Cross Pan Hd, #10 x 1",
5	60-6708T1	4	NUT, SPECIAL,
6	275196A2	1	PLATE, Inc. 9, 38
7	275195A2	1	GASKET,
8	191216A1	8	SCREW, SELF TAPPING, Hex Wash Hd, #10-24 x 5/8",
9	224636A1	1	DECAL, Connector Cover
10	137293A1	4	PLUG,
11	122819A2	1	ROOF, Inc. 12, 13
12	614-8040	4	BOLT, Hex, M8 x 40, 8.8, Full Thd,
13	230484A1	4	NUT, M8 - 1.25
14	191216A1	7	SCREW, SELF TAPPING, Hex Wash Hd, #10-24 x 5/8",
15	353-593	4	PLUG, 2-1/2 ID
16	141758A3	1	COVER,
17	1987144C1	1	DECAL, Axial-Flow (Not Shown)
18	413-416	3	BOLT, Hex, 1/4"-20 x 1", G5,
19	116809A5	1	WINDSHIELD,
20	117707A3	4	CLAMP,
21	825-5148	4	NUT, M8, Flg Ser,
21	829-1408	4	NUT, M8, Cl 10,
22	97268C1	25	SPACER,
23	425-104	3	NUT, 1/4"-20, G5,
24	232846A2	1	COVER,
25	87387863	1	CAB, Frame Assembly
26	353-402	8	PLUG, Dome, .375" hole, Nylon, Exterior Trim
27	87716230	1	EMBLEM, Case IH Logo
28	131-431	2	NUT, LOCK, Self, Threading, 1/4",
29	131-839	16	NUT, U, #10-16, Panel type,
30	246752A1	1	PLATE, Right Hand, For Attaching Parts
31	247058A1	1	GASKET,
32	191216A1	4	SCREW, SELF TAPPING, Hex Wash Hd, #10-24 x 5/8",
33	246753A1	1	PLATE, Left Hand
34	252676A1	1	GASKET,
35	251548A1	3	TAPE, ADHESIVE, 63.5 mm (2-1/2"), Cut From 251550A1
35	251549A1	1	TAPE, ADHESIVE, 160 mm (6-1/4"), Cut From 251550A1
36	825-5148	6	NUT, M8, Flg Ser,
37	495-81001	2	WASHER, 5/16",
38	282855A1	3	DECAL, Connector Cover

PDF created with pdfFactory trial version www.pdffactory.com

ссылка	Номер детали	Кол-во	Описание
39	320451A1	1	BRACKET, Weldment, Display Mounting
40	87379592	1	DECAL, Front Floor Plate
41	195-81026	2	WASHER, .266" x 13/16" x .079",
42	495-11041	6	WASHER, 3/8", SAE,
43	353-400	2-4	PLUG, Dome, .250" hole, Nylon, Cab Exterior
44	353-411	2	PLUG, Dome, 1.000" hole, Nylon, Antenna Hole
45	1301560C2	1	STIFFENER, (Not Shown)
46	291207C1	1	CLAMP, (Not Shown)
47	515-25476	1	CLAMP, 1 7/8", Insul, 1/2" Bolt, (Not Shown)
48	1301387C2	1	CLIP, (Not Shown)
49	409-7616	1	BOLT, Hex Flg, 3/8"-16 x 1", Serr, (Not Shown)
50	231-5146	1	NUT, Flg, USR, 3/8"-16, (Not Shown)
51	353-404	2	PLUG, Dome, .500" hole, Nylon, (Not Shown)

PDF created with pdfFactory trial version www.pdffactory.com

09G-02 CAB - DOOR ASSY, LEFT HAND

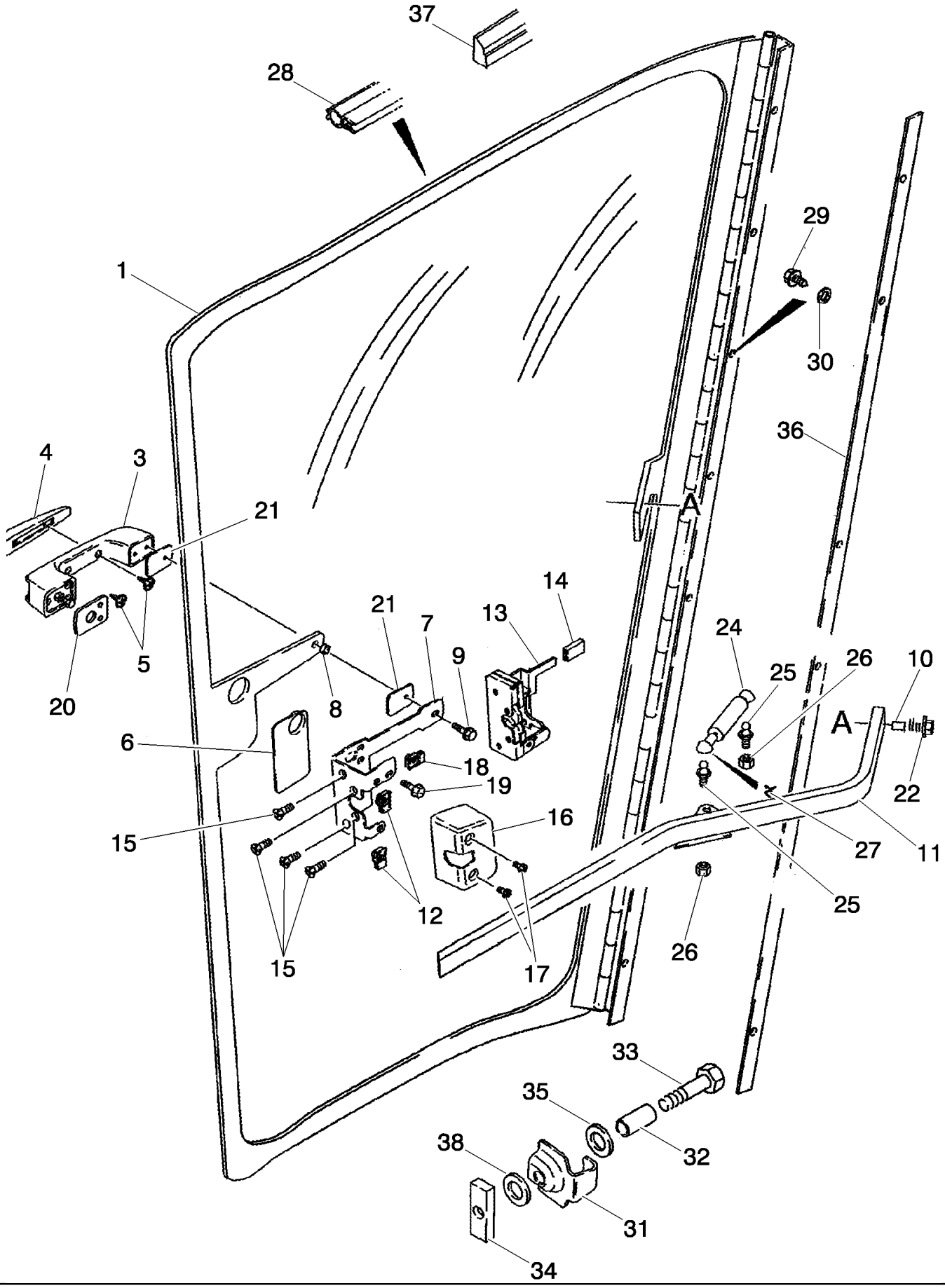

PDF created with pdfFactory trial version www.pdffactory.com

7088 AXIAL-FLOW COMBINE (EU) (4/08-)

09G-02 CAB - DOOR ASSY, LEFT HAND

ссылка	Номер детали	Кол-во	Описание
	259688A2	1	DOOR, Left Hand, Inc. 1 - 22
1	NSS	1	NOT SERVICED SEPARATELY, DOOR, Inc. Hinge
3	117711A1	1	HANDLE, Push Button
4	176022A2	1	BUMPER, Door Handle
5	177092A1	2	SCREW, SELF TAPPING,
6	123946A2	1	GASKET, Door Latch
7	123937A2	1	SUPPORT, Door Latch
8	109171C1	1	BUSHING,
9	303888A1	3	SCREW,
10	175578C1	1	INSULATOR,
11	195649A1	1	HANDLE,
12	564791R1	2	NUT, 1/4
13	117714A1	1	LATCH, Door
14	60-6423T1	1	CAP, End
15	443-12512	4	SCREW, Cross Flat Hd, 1/4"-20 x 3/4",
16	127498A2	1	COVER, Door Latch
17	140-111	2	SCREW, Cross Pan Hd, 1/4"-20 x 1/2",
18	131-610	1	NUT, U, Ret, 1/4"-20,
19	458-48	1	BOLT, Hex Flg, 1/4"-20 x 1/2", G5, Full Thd,
20	194174A1	1	GASKET, Large
21	194175A1	2	GASKET, Small
22	458-416	1	BOLT, Hex Flg, 1/4"-20 x 1", G5, Full Thd,
24	144006A1	1	CYLINDER,
25	F44882	2	BALL,
26	231-1445	2	NUT, LOCK, 5/16"-18, GB,
27	F44883	2	CLIP,
28	234089A1	1	SEAL, DOOR, 4483 mm (176-1/2")
29	281-14512	16	SCREW, SELF TAPPING, Hex Wash Hd, #10 x 3/4",
30	495-31022	16	WASHER, #10,
31	117716A1	1	PROTECTOR,
32	117717A2	1	SPACER,
33	814-12060	1	BOLT, Hex, M12 x 60, 8.8,
34	117718A1	1	PLATE,
35	495-81017	1	WASHER, 17/32" x 3/4" x .120",
36	193316A1	1	SHIM,
37	232801A1	1	SEAL, DOOR, 1016 mm (40"), Door
38	396-41053	1	WASHER, 17/32" x 1 1/4" x .188", HDN,

PDF created with pdfFactory trial version www.pdffactory.com

09G-03 CAB - DOOR ASSY, RIGHT HAND

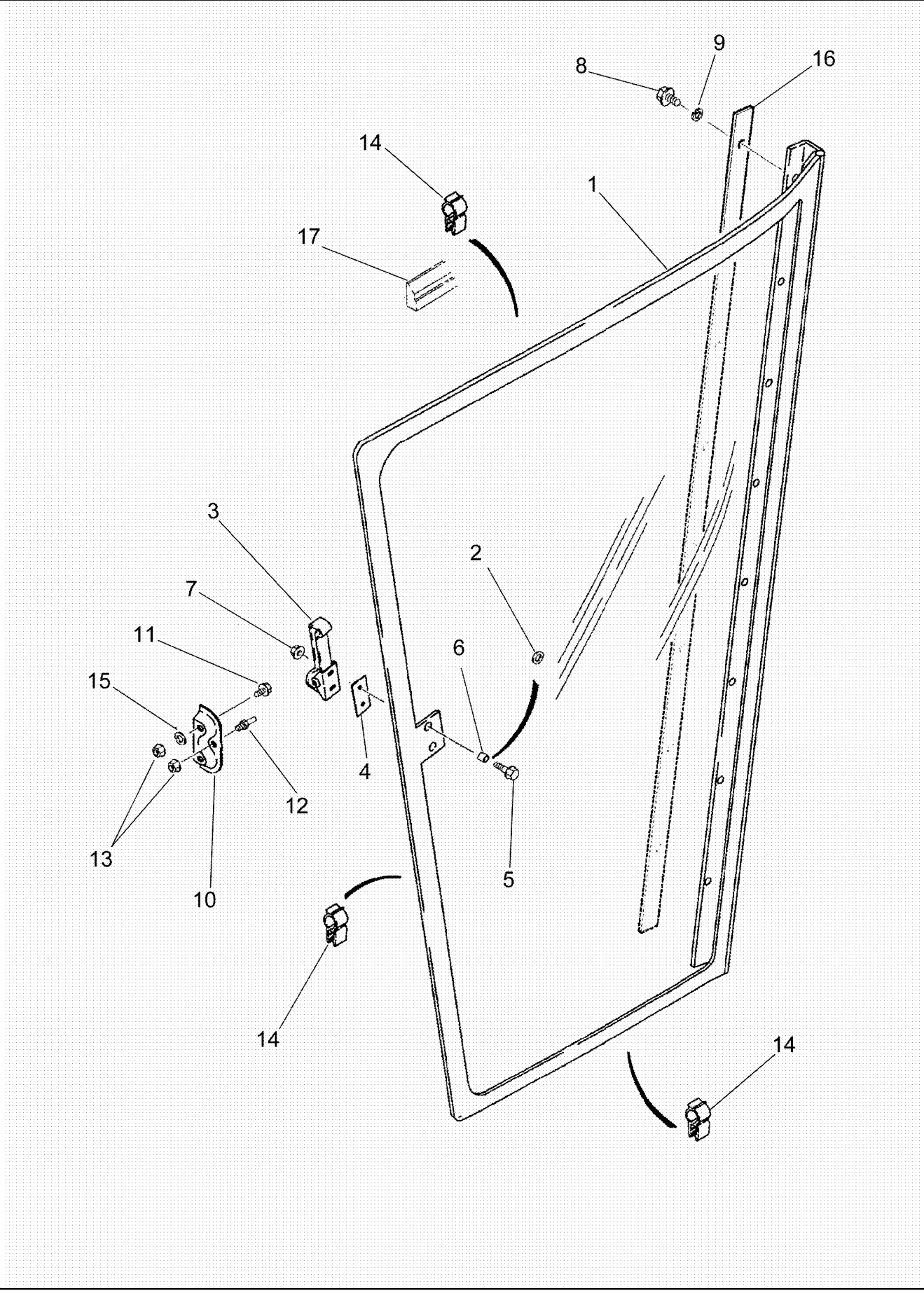

PDF created with pdfFactory trial version www.pdffactory.com

7088 AXIAL-FLOW COMBINE (EU) (4/08-)

09G-03 CAB - DOOR ASSY, RIGHT HAND

ссылка	Номер детали	Кол-во	Описание
1	186390A2	1	DOOR, Right Hand
2	225913A1	2	WASHER,
3	1955184C1	1	LEVER,
4	194190A2	1	GASKET, Handle
5	97006C1	2	BOLT, M6 x 20
6	109171C1	2	BUSHING,
7	97005C1	2	NUT, M6
8	117067A1	8	SCREW, SELF TAPPING, Cross Pan Hd, #10-24 x 3/4",
9	492-11010	8	WASHER, LOCK, #10,
10	117723A2	1	SUPPORT,
11	613-8020	2	BOLT, Hex, M8 x 20, 8.8, Full Thd,
12	117724A1	1	PIN,
13	825-5148	3	NUT, M8, Flg Ser,
14	234089A1	2	SEAL, DOOR, 4483 mm (176-1/2")
15	495-21038	2	WASHER, 5/16",
16	193316A1	1	SHIM,
17	232801A1	1	SEAL, DOOR, 1016 mm (40")

PDF created with pdfFactory trial version www.pdffactory.com

7088 AXIAL-FLOW COMBINE (EU) (4/08-)

09G-04 CAB - WINDOW, REAR - OPENABLE

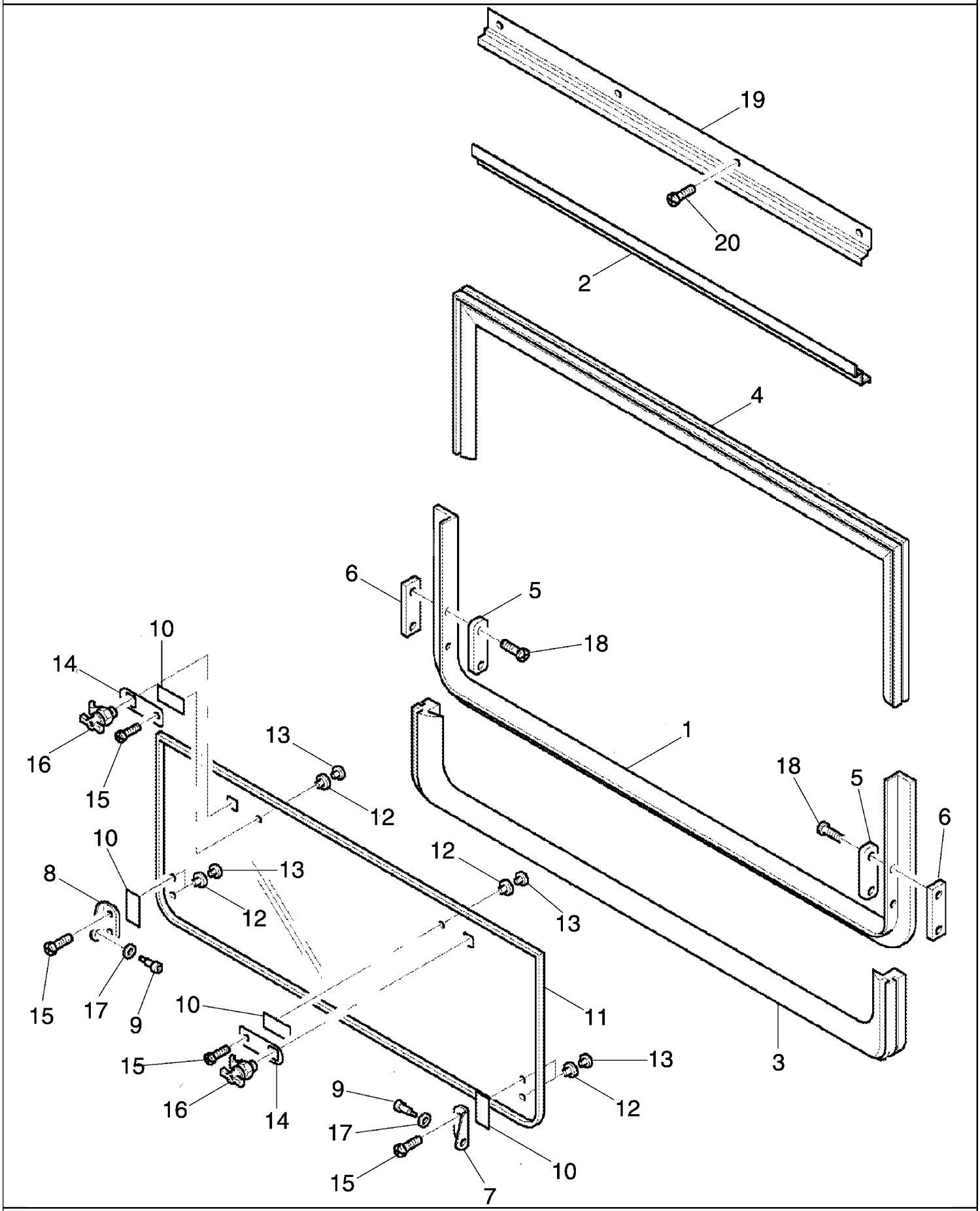

PDF created with pdfFactory trial version www.pdffactory.com

7088 AXIAL-FLOW COMBINE (EU) (4/08-)

09G-04 CAB - WINDOW, REAR - OPENABLE

ссылка	Номер детали	Кол-во	Описание
	87387979	1	WINDOW ASSY, Openable, Inc. 1 - 18
1	NS	1	NOT SERVICED, FRAME ASSEMBLY, Rear Window Lower
2	NS	1	NOT SERVICED, FRAME ASSEMBLY, Rear Window Upper
3	246010A1	1	SEAL, Lower Frame
4	246009A1	1	SEAL, Upper Frame
5	248379A1	2	PLATE, Hinge, Inner
6	248377A1	2	PLATE, Hinge, Outer
7	248380A1	1	HINGE, Right Hand
8	248381A1	1	HINGE, Left Hand
9	248410A1	2	SCREW, 5/16
10	249363A1	4	ADHESIVE STRIP, 40 mm, Cut From 248383A1
11	248375A1	1	GLASS,
12	248385A1	6	BUSHING,
13	248384A1	6	NUT,
14	248376A1	2	PLATE,
15	249009A1	8	SCREW, SELF TAPPING, Cross Pan Hd, #8-32 x 3/8",
16	249364A1	2	LOCK,
17	249684A1	2	WASHER,
18	260-14416	4	SCREW, SELF TAPPING, Cross Pan Hd, #8 x 1",
19	253771A1	1	SUPPORT,
20	191216A1	10	SCREW, SELF TAPPING, Hex Wash Hd, #10-24 x 5/8",
21	231-51409	4	NUT, Flg, USR, #10-24, (Not Shown)

PDF created with pdfFactory trial version www.pdffactory.com

09G-05 CAB - FLOOR MAT AND INSULATION

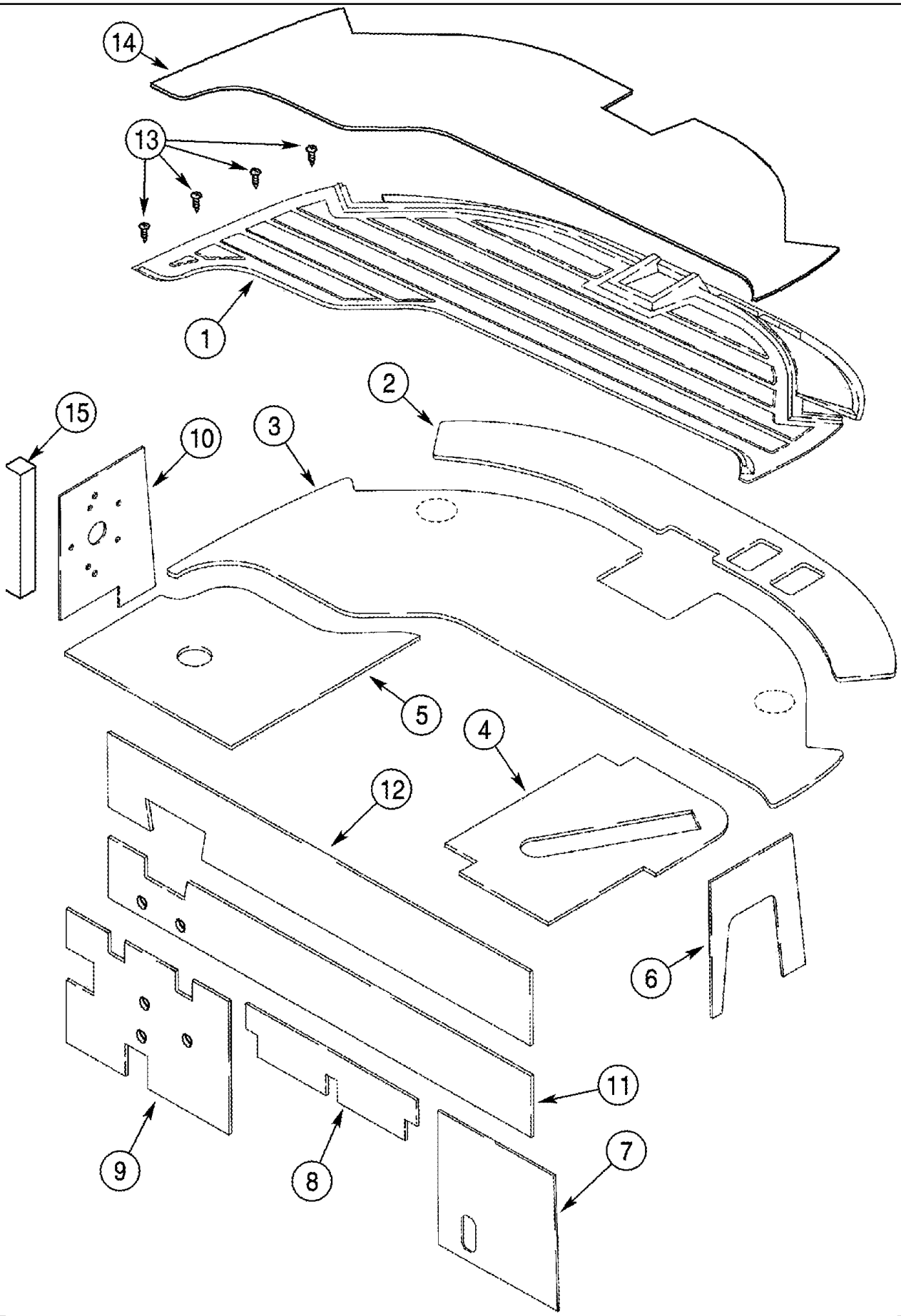

PDF created with pdfFactory trial version www.pdffactory.com

7088 AXIAL-FLOW COMBINE (EU) (4/08-)

09G-05 CAB - FLOOR MAT AND INSULATION

ссылка	Номер детали	Кол-во	Описание
1	331728A1	1	MAT, FLOOR, Cab
2	136485A1	1	MAT, Floor, Front
3	136484A1	1	MAT, Floor
4	87388116	1	FOAM, Floor, Right Hand Rear
5	87664101	1	INSULATION, FOAM, Floor, Left Hand Rear
6	247007A1	1	INSULATION, FOAM, Lower Right Hand Rear
7	125040A2	1	INSULATION, FOAM, Lower Right Hand Rear
8	119486A1	1	INSULATION, FOAM, Lower Rear Center
9	125041A3	1	INSULATION, FOAM, Lower Left Hand Rear
10	87387877	1	GASKET, Pressurizer Blower
11	137944A2	1	INSULATION, FOAM, Center Rear
12	137945A1	1	INSULATION, FOAM, Upper Rear
13	266-53516	4	SCREW, SELF TAPPING, Cross Oval Hd, #10 x 1",
14	182658A1	1	CARPET,
15	97192C1	2	SEAL, 500 mm (19-5/8"), Cut From 1971350C1

PDF created with pdfFactory trial version www.pdffactory.com

09G-06 CAB - HEADLINER

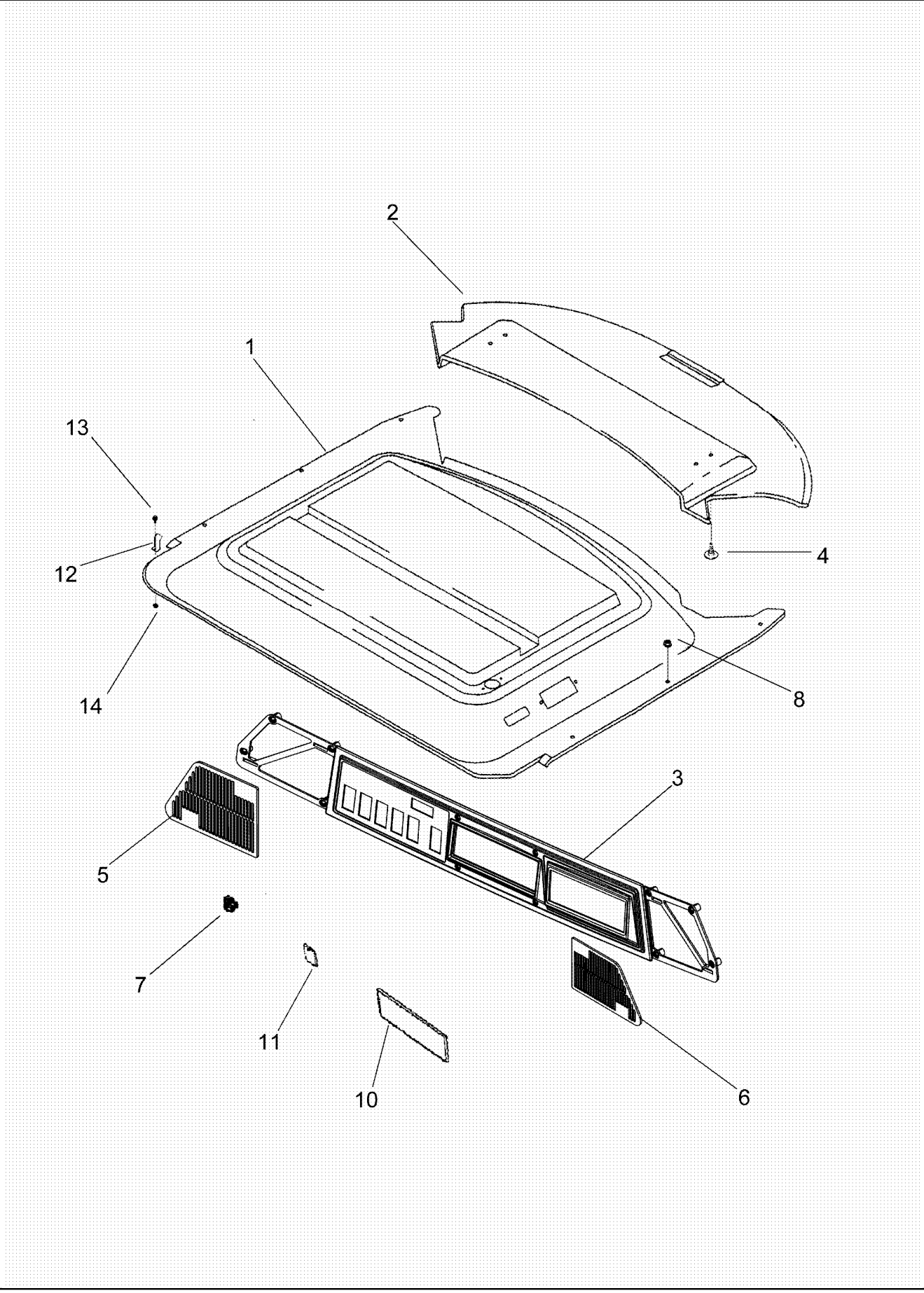

PDF created with pdfFactory trial version www.pdffactory.com

7088 AXIAL-FLOW COMBINE (EU) (4/08-)

09G-06 CAB - HEADLINER

ссылка	Номер детали	Кол-во	Описание
1	87388118	1	LINER, Roof, Rear
2	87388120	1	LINER, Roof, Front
3	87686440	1	TRIM PANEL, Overhead Switch
4	260-16524	12	SCREW, SELF TAPPING, Cross Pan Hd, #10 x 1 1/2",
5	1971229C2	1	COVER, Speaker, Left Hand
6	1971349C2	1	COVER, Speaker, Right Hand
7	97058C1	4	CLIP,
8	825-2406	6	NUT, M6 x 1, Flg, Cl 8,
10	87105189	1	COVER, , Used on models without a radio
11	245918C1	AR	CAP,
12	87718124	2	CLIP,
13	281-53510	2	SCREW, SELF TAPPING, Hex Wash Hd, #10 x 5/8",
14	231-51409	2	NUT, Flg, USR, #10-24,

PDF created with pdfFactory trial version www.pdffactory.com

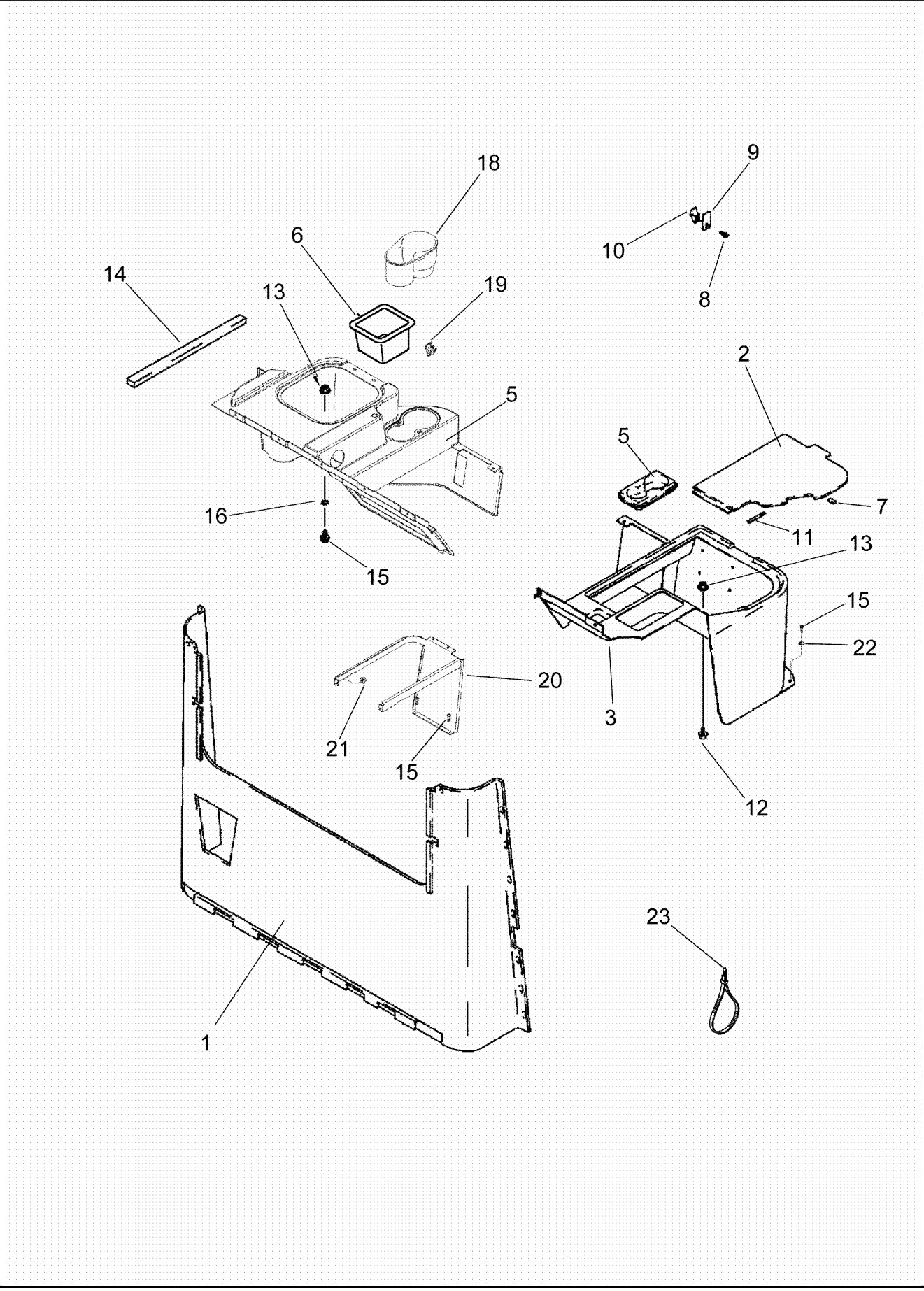

PDF created with pdfFactory trial version www.pdffactory.com

7088 AXIAL-FLOW COMBINE (EU) (4/08-)

09G-07 CAB TRIM, INTERIOR

ссылка	Номер детали	Кол-во	Описание
1	87388140	1	PANEL, Rear Wall Trim
2	87342570	1	SHIELD, Fuse Access
3	87342568	1	SHIELD, Pedestal, Right Hand
4	87342569	1	SHIELD, Pedestal, Left Hand
5	87580935	1	TRAY, Console Cupholder
6	119308A2	1	ASH TRAY, Storage
7	121067A1	2	FASTENER, 1 x 12, Cut From 121068A1 Velcro
8	276-13520	1	SCREW, SELF TAPPING, Hex Hd, #10 x 1 1/4",
9	60-6520T1	1	PLATE,
10	3234176R1	1	COAT HOOK,
11	1990258C1	2	GASKET, 80 mm (3-5/32"), Cut From 87302032
12	191216A1	15	SCREW, SELF TAPPING, Hex Wash Hd, #10-24 x 5/8",
13	231-51409	12	NUT, Flg, USR, #10-24,
14	192269A1	3	FOAM, 500 mm (19-5/8"), Cut From 1971350C1
15	117067A1	12	SCREW, SELF TAPPING, Cross Pan Hd, #10-24 x 3/4",
16	492-11010	12	WASHER, LOCK, #10,
17	353-410	1	PLUG, Dome, .875" hole, Nylon,
18	87342571	1	SHIELD, Cup
19	278316A2	2	CLIP,
20	87707578	1	SUPPORT ASSY., Pedestal, Left-Hand
21	825-5146	2	NUT, M6, Flg Ser,
22	495-31022	11	WASHER, #10,
23	1978896C1	1	STRAP,

PDF created with pdfFactory trial version www.pdffactory.com

09G-08 CAB - CONSOLE, RIGHT HAND

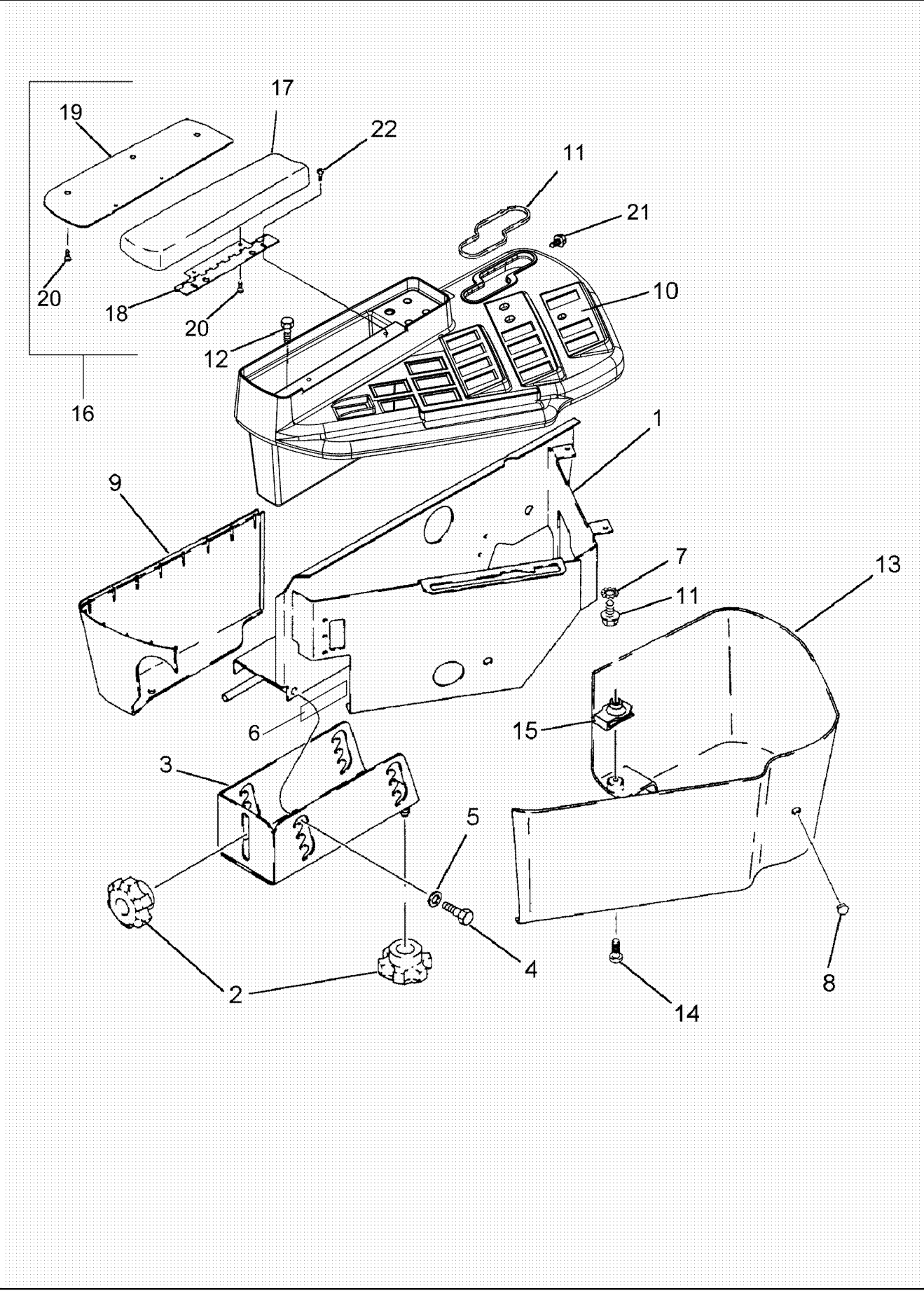

PDF created with pdfFactory trial version www.pdffactory.com

7088 AXIAL-FLOW COMBINE (EU) (4/08-)

09G-08 CAB - CONSOLE, RIGHT HAND

ссылка	Номер детали	Кол-во	Описание
1	345286A1	1	FRAME ASSY,
2	118781A1	3	KNOB,
3	117107A2	1	SUPPORT,
4	827-8040	4	BOLT, Hex, M8 x 40, 10.9,
5	895-15008	4	WASHER, M8 x 20 x 1.6,
6	70-5848T1	1	SEAL,
7	493-81000	2	WASHER, LOCK, Ext-Int Tooth, #10,
9	87613246	1	COVER, Rear
8	353-411	1	PLUG, Dome, 1.000" hole, Nylon,
10	87613263	1	COVER ASSY, Right Hand, Inc. 11, Inc. Decals
11	128833A2	1	GUIDE, Propulsion Control Lever
12	814-6030	1	BOLT, Hex, M6 x 30, 8.8,
13	87613245	1	COVER, Front
14	191216A1	4	SCREW, SELF TAPPING, Hex Wash Hd, #10-24 x 5/8",
15	131-861	4	NUT, Tinn, U, #10-24,
16	128970A3	1	ARMREST, Inc. 17 - 20
17	NSS	1	NOT SERVICED SEPARATELY, SUPPORT
18	128849A2	1	HINGE,
19	185546A1	1	PLATE,
20	185544A1	5	SCREW,
21	841-4410	2	SCREW, Hex Wash Hd, M4 x 10,
22	841-4410	2	SCREW, Hex Wash Hd, M4 x 10,

PDF created with pdfFactory trial version www.pdffactory.com

09G-09 SEAT, INSTRUCTIONAL - STORAGE TRAY

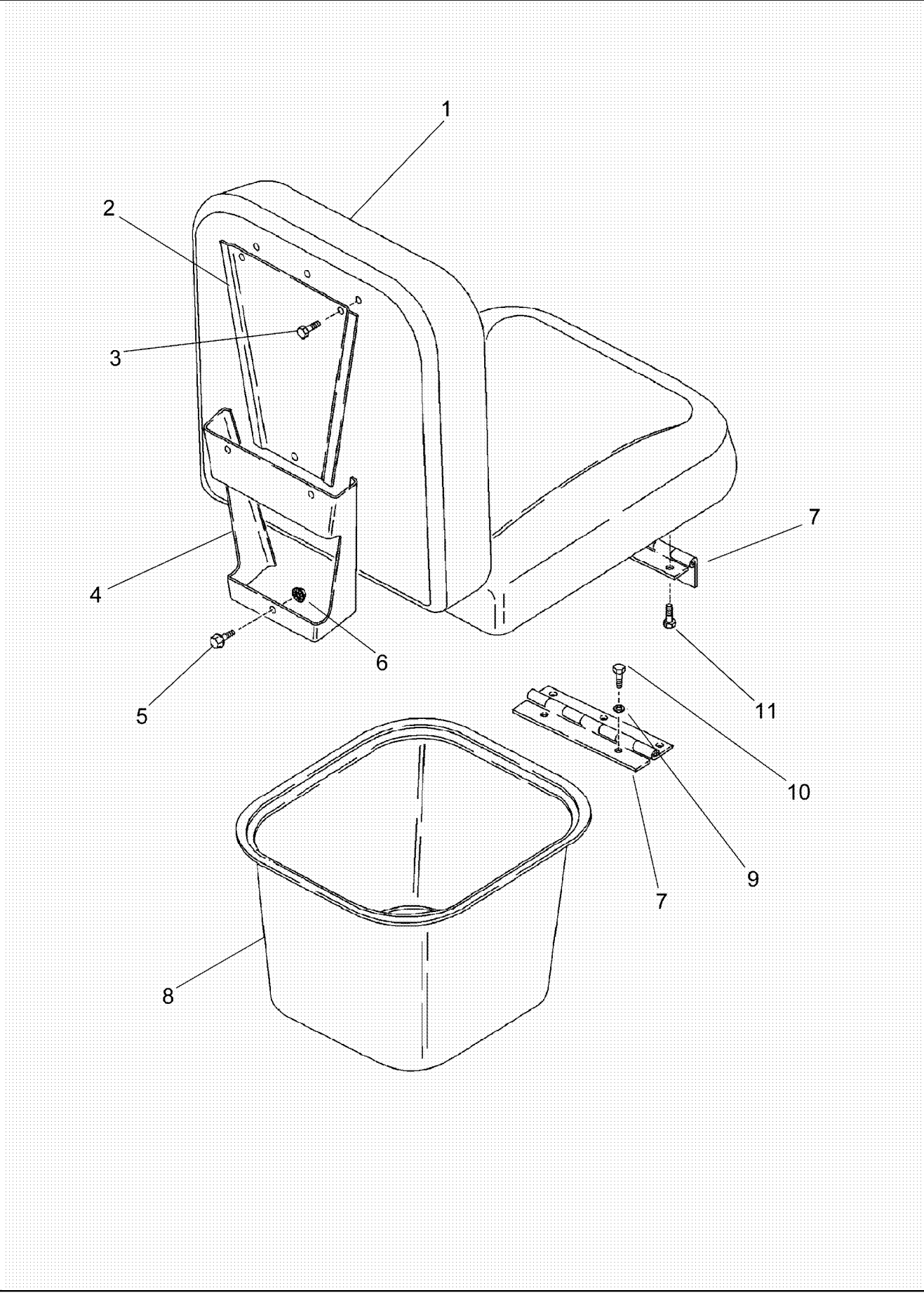

PDF created with pdfFactory trial version www.pdffactory.com

7088 AXIAL-FLOW COMBINE (EU) (4/08-)

09G-09 SEAT, INSTRUCTIONAL - STORAGE TRAY

ссылка	Номер детали	Кол-во	Описание
1	87618520	2	CUSHION,
2	119890A1	1	SUPPORT, Seat
3	413-412	3	BOLT, Hex, 1/4"-20 x 3/4", G5, Full Thd,
4	119891A1	1	SUPPORT, Seat
5	281-53510	3	SCREW, SELF TAPPING, Hex Wash Hd, #10 x 5/8",
6	231-51409	3	NUT, Flg, USR, #10-24,
7	121062A1	1	HINGE, Seat
8	119308A2	1	ASH TRAY,
9	614-6020	2	BOLT, Hex, M6 x 20, 8.8,
10	895-11006	2	WASHER, M6,
11	413-412	6	BOLT, Hex, 1/4"-20 x 3/4", G5, Full Thd,

PDF created with pdfFactory trial version www.pdffactory.com

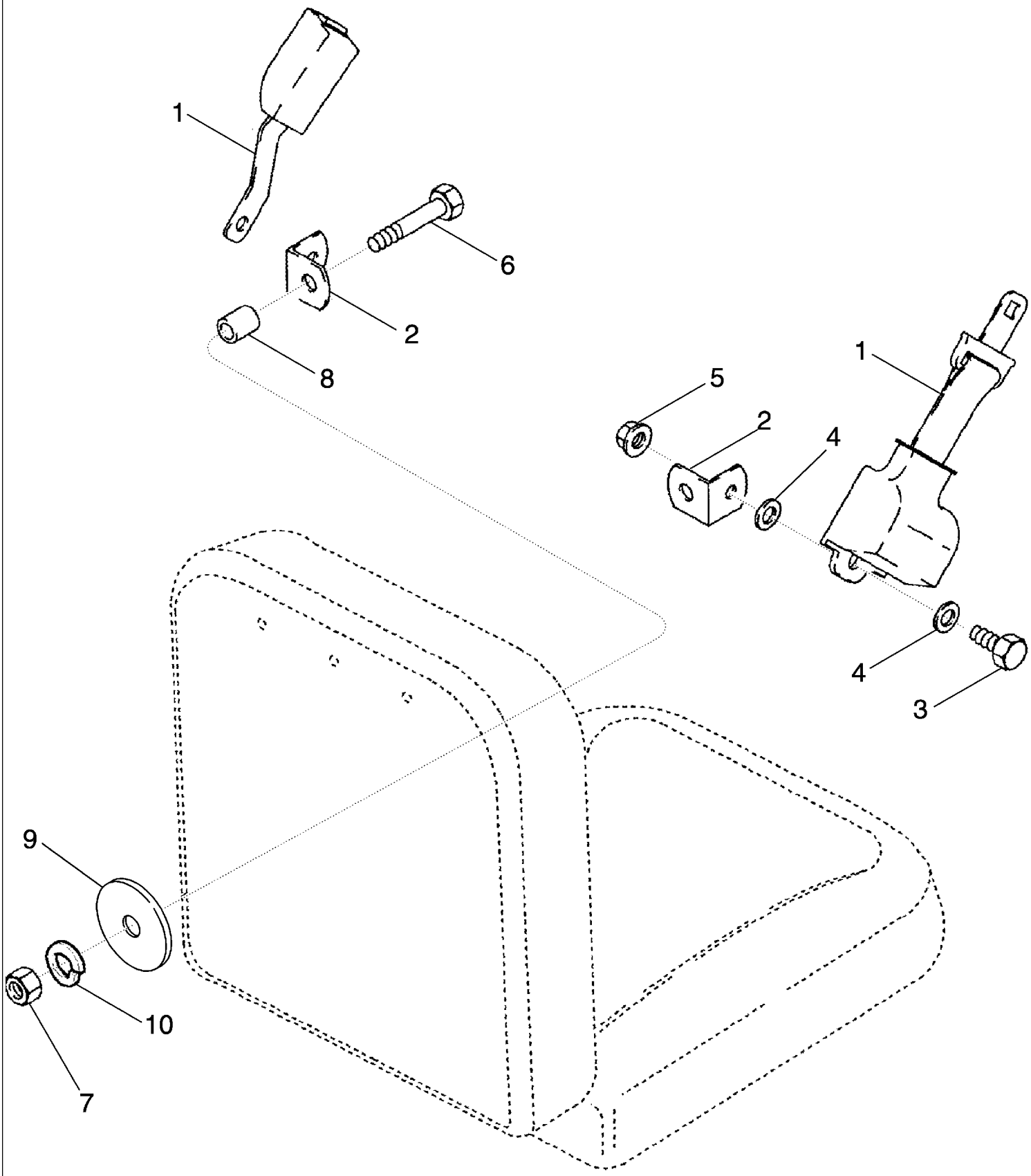

PDF created with pdfFactory trial version www.pdffactory.com

7088 AXIAL-FLOW COMBINE (EU) (4/08-)

09G-10 SEAT, INSTRUCTIONAL - BELTS

ссылка	Номер детали	Кол-во	Описание
1	224808A1	1	SEAT BELT,
2	224809A1	2	SUPPORT,
3	414-716	2	BOLT, Hex, 7/16"-20 x 1", G5, Full Thd,
4	495-81009	2	WASHER, .469" x 1" x .120",
5	231-5447	2	NUT, LOCK, Flg, 7/16"-20,
6	413-832	2	BOLT, Hex, 1/2"-13 x 2", G5,
7	425-108	2	NUT, 1/2"-13, G5,
8	224368A1	2	SPACER,
9	495-91167	2	WASHER, 17/32" x 2" x .120",
10	492-11050	2	WASHER, LOCK, 1/2",

PDF created with pdfFactory trial version www.pdffactory.com

09G-11 SEAT, OPERATOR - AIR SUSPENSION - CUSHIONS AND KNOBS

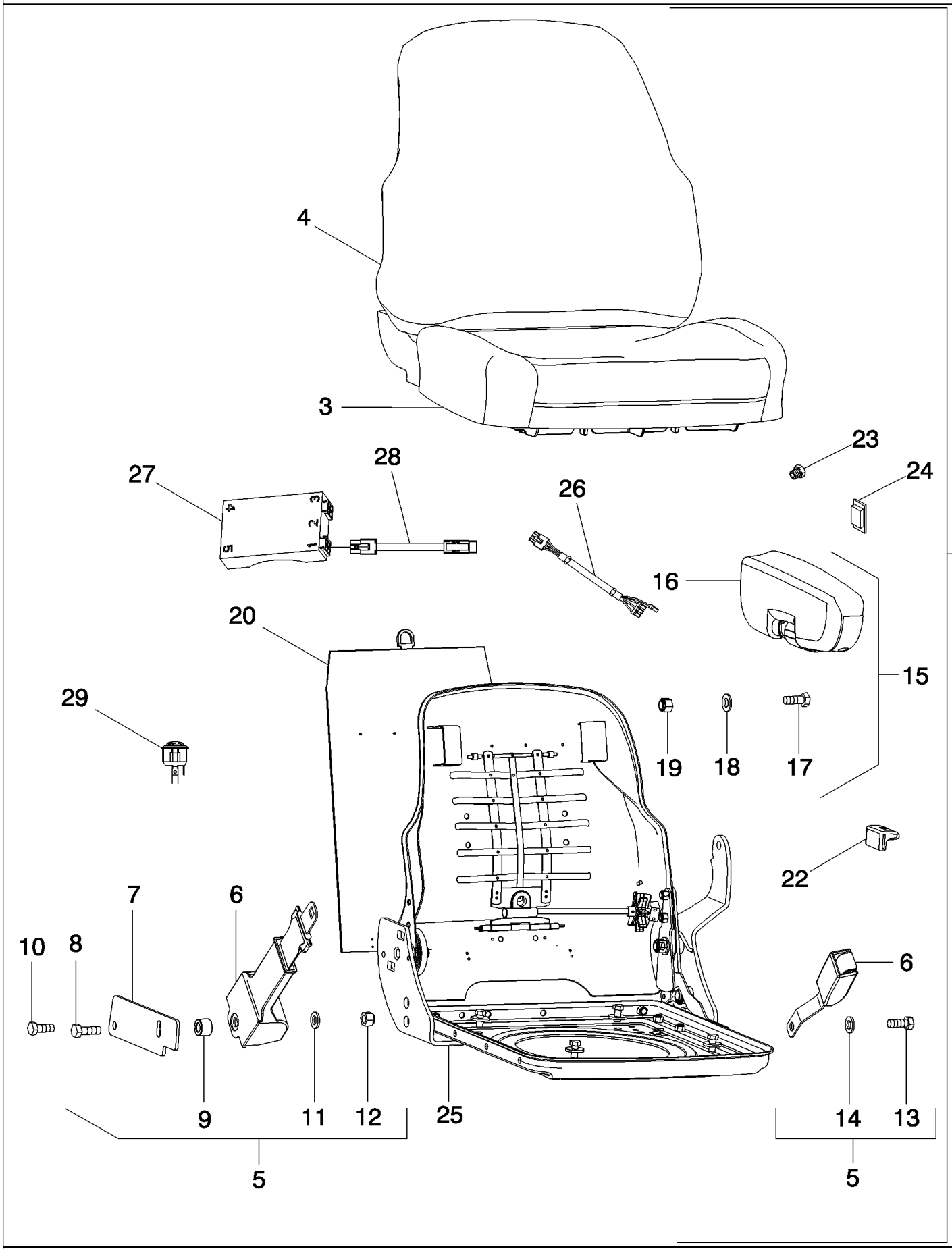

PDF created with pdfFactory trial version www.pdffactory.com

7088 AXIAL-FLOW COMBINE (EU) (4/08-)

09G-11 SEAT, OPERATOR - AIR SUSPENSION - CUSHIONS AND KNOBS

ссылка	Номер детали	Кол-во	Описание
1	87686695	1	SEAT ASSY., Cloth, Fabriform, Inc. 2 - 25, Inc. Figure(s) 09G-12, 09G-13, (Not Shown)
1	87686676	1	SEAT ASSY., Cloth, Bucket, Inc. 2 - 25, Inc. Figure(s) 09G-12, 09G-13, (Not Shown)
1	87646953	1	SEAT ASSY., Leather, With Heat, Inc. 2 - 22 And 25 - 29, Inc. Figure(s) 09G-12, 09G-13, (Not Shown)
2	84151261	1	SEAT ACCESSORY, Top, Cloth With Fabriform Cushions, Inc. 3 - 25
2	84151264	1	SEAT ACCESSORY, Top, With Bucket Style Cushions, Inc. 3 - 25
2	84151277	1	SEAT ACCESSORY, Top, Red Leather With 3-Position Heat, Inc. 3 - 22 And 25 - 29
3	87758013	1	CUSHION, Kit, Seat, Cloth Fabriform, With OPS Switch
3	84120474	1	CUSHION, Kit, Seat, Cloth Bucket Style, With OPS Switch
3	87749241	1	CUSHION, SEAT, Kit, Red Leather With Heat, With OPS Switch
4	87758229	1	CUSHION, Kit, Back, Cloth Fabriform
4	84120473	1	CUSHION, SEAT, Kit, Back, Cloth Bucket Style
4	87397614	1	CUSHION, SEAT, Kit, Back, Red Leather With Heat
5	87416490	1	KIT, Seat Belt, Inc. 6 - 14
6	279671A1	1	SEAT BELT,
7	87416920	1	PLATE, Seat Belt Mounting
8	815-12050	1	BOLT, Hex, M12 x 50, 8.8,
9	NSS	1	NOT SERVICED SEPARATELY, SPACER, Mounting Plate
10	615-10025	1	BOLT, Hex, M10 x 25, 8.8, Full Thd,
11	895-10010	1	WASHER, M10 x 20 x 2,
12	832-41410	1	NUT, LOCK, M10 x 1.5, Cl 10,
13	613-12025	1	BOLT, Hex, M12 x 25, 8.8, Full Thd,
14	896-11012	1	WASHER, M13.5 x 24.5 x 3, HT,
15	84120494	1	ARMREST, Kit, Left Hand, Inc. 16 - 19
16	NSS	1	NOT SERVICED SEPARATELY, ARMREST
17	854-12040	1	BOLT, Hex Flg, M12 x 40, 10.9,
18	395-11053	1	WASHER, 1/2",
19	832-10312	1	NUT, LOCK, M12 x 1.75, Cl8,
20	86994172	1	KIT, SERVICE, Manual Holder
21	86994165	1	SEAT ACCESSORY, Kit, Recliner Service (Not Shown)
22	87416475	1	KNOB, Recliner
23	84151297	1	PLUG, 20 mm, Dome
24	375200A1	1	PLUG, No Heater Switch
25	87416485	1	KIT, Seat Top
26	87749304	1	HARNESS, Heat Switch (Heated Seat Only)
27	87749303	1	CONTROL UNIT, Heater (Heated Seat Only)
28	87752587	1	HARNESS, Heater Controller Extension (Heated Seat Only)
29	87749302	1	SWITCH, 3-Position Heater (Heated Seat Only)

PDF created with pdfFactory trial version www.pdffactory.com

09G-12 SEAT, OPERATOR - AIR SUSPENSION - PLATE AND SLIDES

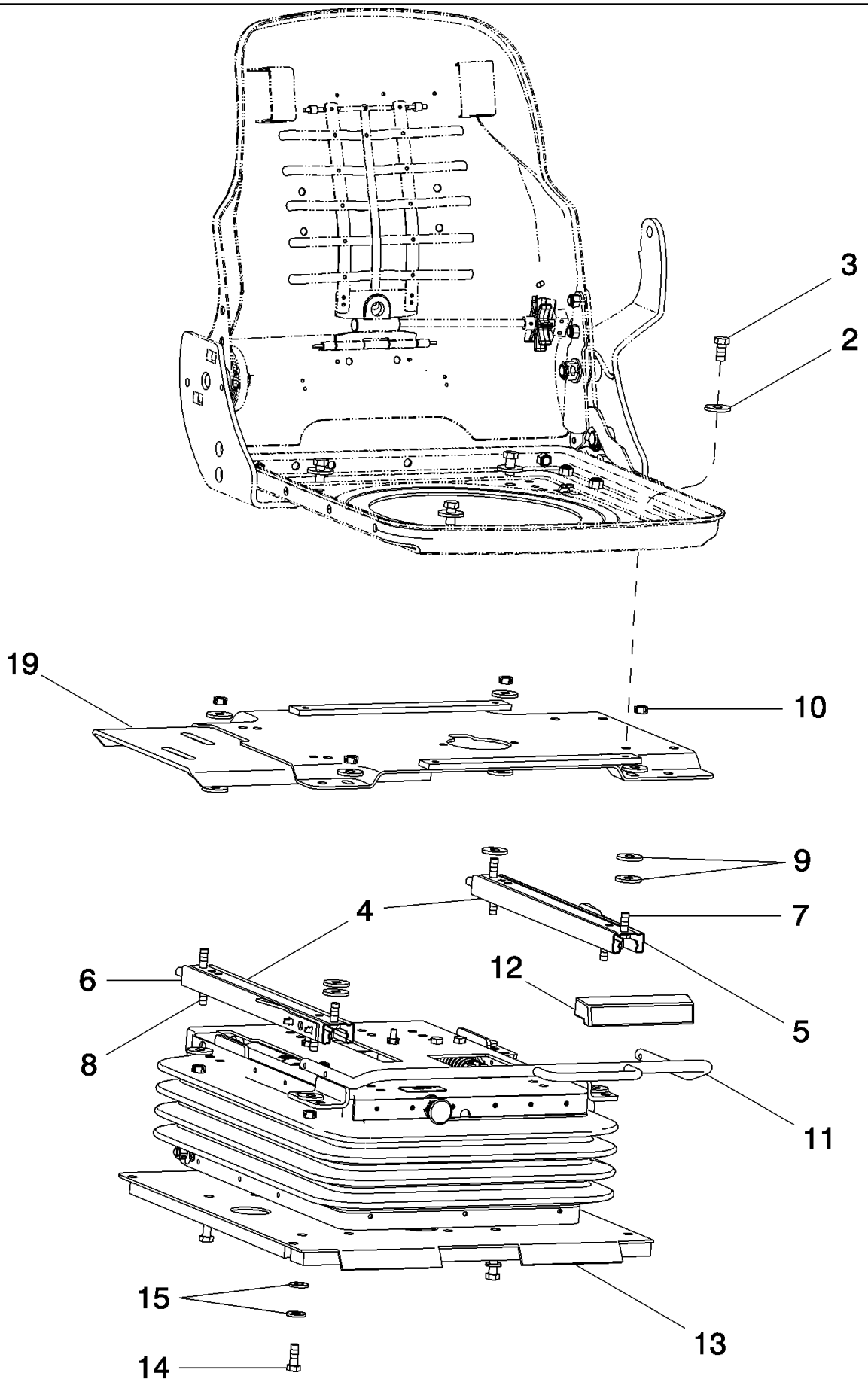

PDF created with pdfFactory trial version www.pdffactory.com

7088 AXIAL-FLOW COMBINE (EU) (4/08-)

09G-12 SEAT, OPERATOR - AIR SUSPENSION - PLATE AND SLIDES

ссылка	Номер детали	Кол-во	Описание
1	87686695	1	SEAT ASSY., Cloth, Fabriform, Inc. 2 - 19, Inc. Figure(s) 09G-11, 09G-13 (Not Shown)
1	87686676	1	SEAT ASSY., Cloth, Bucket, Inc. 2 - 19, Inc. Figure(s) 09G-11, 09G-13
1	87646953	1	SEAT ASSY., Leather, With Heat, Inc. 2 - 19, Inc. Figure(s) 09G-11, 09G-13
2	1974732C1	4	WASHER,
3	413-612	4	BOLT, Hex, 3/8"-16 x 3/4", G5, Full Thd,
4	87416482	1	KIT, Locking Slides, Inc. 5 - 11
5	NSS	1	NOT SERVICED SEPARATELY, SLIDE ASSEMBLY., Left Hand
6	NSS	1	NOT SERVICED SEPARATELY, SLIDE ASSEMBLY., Right Hand
7	413-514	4	BOLT, Hex, 5/16"-18 x 7/8", G5, Full Thd,
8	117-109	4	BOLT, Sq Hd, 5/18"-16 x 3/4", G5,
9	1974732C1	16	WASHER,
10	231-5145	8	NUT, Flg, USR, 5/16"-18,
11	86994163	1	KIT, SERVICE, BAR, Fore/Aft Slide
12	180587A1	1	HANDLE, Knob
13	87413043	1	PLATE, Seat Mounting
14	614-8020	4	BOLT, Hex, M8 x 20, 8.8,
15	495-11034	4	WASHER, 5/16", SAE,
16	263-10610	1	SCREW, SELF TAPPING, Slotted Pan Hd, #12 x 5/8", (Not Shown)
17	492-11012	1	WASHER, LOCK, #12, (Not Shown)
18	495-31022	1	WASHER, #10, (Not Shown)
19	87413045	1	PLATE, Seat Adapter

PDF created with pdfFactory trial version www.pdffactory.com

09G-13 SEAT, OPERATOR - SUSPENSION

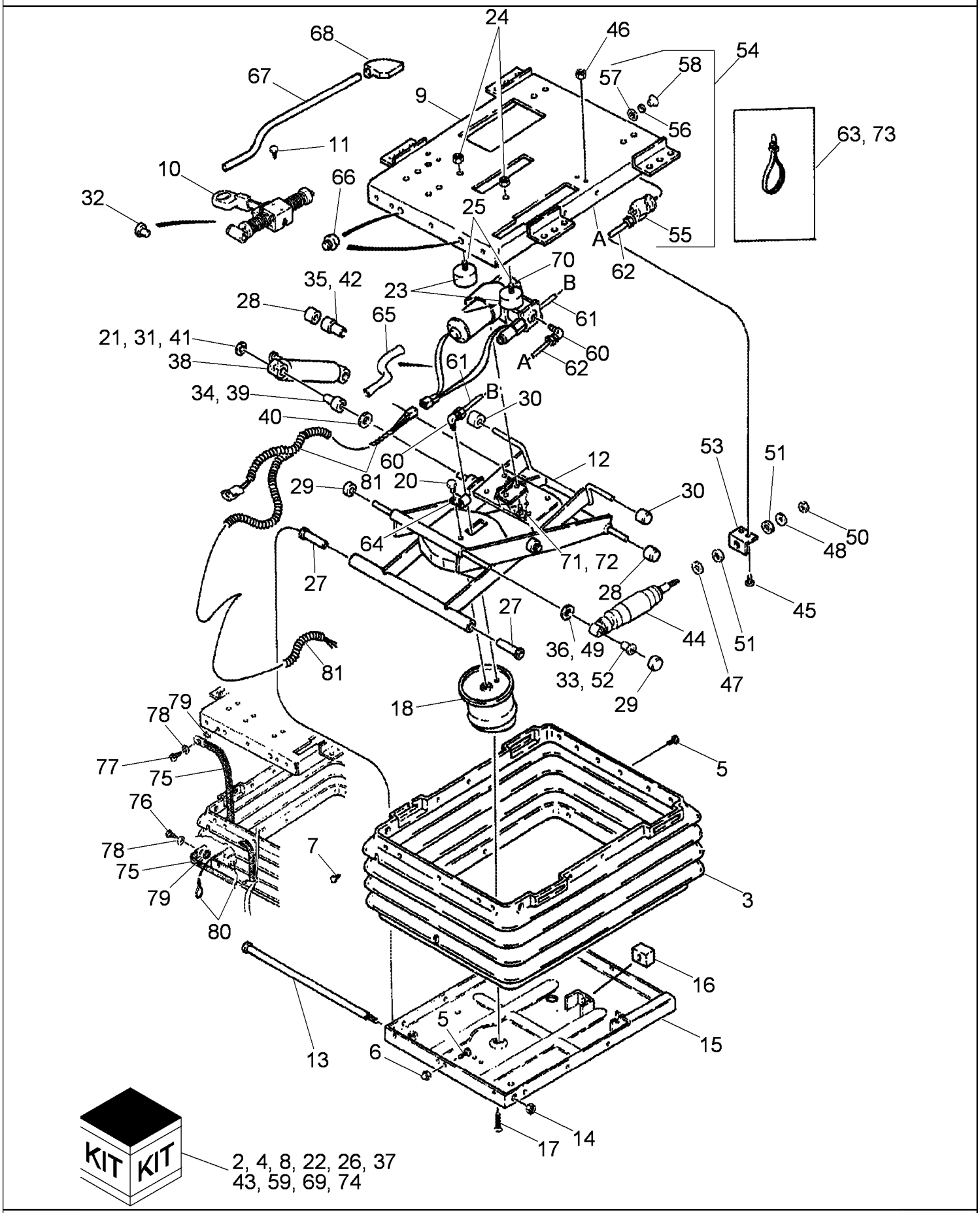

PDF created with pdfFactory trial version www.pdffactory.com

7088 AXIAL-FLOW COMBINE (EU) (4/08-)

09G-13 SEAT, OPERATOR - SUSPENSION

ссылка	Номер детали	Кол-во	Описание
1	87686695	1	SEAT ASSY., Cloth, Fabriform, Inc. 2 - 81, Inc. Figure(s) 09G-11, 09G-12 (Not Shown)
1	87686676	1	SEAT ASSY., Cloth, Bucket, Inc. 2 - 81, Inc. Figure(s) 09G-11, 09G-12
1	87646953	1	SEAT ASSY., Leather, With Heat, Inc. 2 - 81, Inc. Figure(s) 09G-11, 09G-12
2	1990647C2	1	KIT, Boot, Suspension, Inc. 3 - 7
3	NSS	1	NOT SERVICED SEPARATELY, BOOT
4	132872A1	1	KIT, Inc. 5 - 7
5	NSS	20	NOT SERVICED SEPARATELY, FASTENER
6	NSS	3	NOT SERVICED SEPARATELY, NUT
7	NSS	3	NOT SERVICED SEPARATELY, CLIP
8	87416447	1	KIT, Suspension Service, For Cloth Seats, Inc. 9 - 73 And 81
8	84151638	1	SEAT ACCESSORY, Kit, Suspension Service, For Leather With Heat Seats, Inc. 9 - 73 And 81
9	180591A1	1	PLATE, Upper
10	180592A1	1	SHOCK ABSORBER,
11	276-24812	2	SCREW, SELF TAPPING, Hex Hd, 5/16" x 3/4",
12	1990643C1	1	FRAME ASSY,
13	A49529	1	SHAFT,
14	231-4206	1	NUT, LOCK, 3/8"-16, GB,
15	86556264	1	HOUSING, Lower, Also Order 132872A1, A45054
16	A45054	1	BUMPER,
17	443-13812	1	SCREW, Cross Flat Hd, 3/8"-16 x 3/4",
18	197793A1	1	SPRING,
20	413-68	1	BOLT, Hex, 3/8"-16 x 1/2", G5, Full Thd,
21	131-425	1	NUT, LOCK, Push, 1/2",
22	180593A1	2	KIT, Bumper, Inc. 23 - 25
23	NSS	2	NOT SERVICED SEPARATELY, BUMPER
24	231-1444	2	NUT, LOCK, 1/4"-20, GB,
25	340-12520	2	SCREW, Cross Pan Hd, 1/4"-20 x 1 1/4",
26	180594A3	1	KIT, Rollers And Bearings, Inc. 27 - 36
27	NSS	2	NOT SERVICED SEPARATELY, BUSHING
28	NSS	2	NOT SERVICED SEPARATELY, ROLLER
29	NSS	4	NOT SERVICED SEPARATELY, ROLLER
30	NSS	2	NOT SERVICED SEPARATELY, ROLLER
31	131-425	1	NUT, LOCK, Push, 1/2",
32	NSS	1	NOT SERVICED SEPARATELY, BEARING, Pivot
33	NSS	1	NOT SERVICED SEPARATELY, BEARING, Pivot
34	NSS	1	NOT SERVICED SEPARATELY, BEARING, Pivot
35	NSS	1	NOT SERVICED SEPARATELY, BEARING, Pivot
36	NSS	1	NOT SERVICED SEPARATELY, SPACER
37	1344250C2	1	KIT, Shock Absorber, Inc. 38 - 42
38	NSS	1	NOT SERVICED SEPARATELY, SHOCK ABSORBER
39	NSS	1	NOT SERVICED SEPARATELY, BEARING, Pivot

PDF created with pdfFactory trial version www.pdffactory.com

ссылка	Номер детали	Кол-во	Описание
40	A45519	1	WASHER,
41	131-425	1	NUT, LOCK, Push, 1/2",
42	NSS	1	NOT SERVICED SEPARATELY, BEARING, Pivot
43	227546A1	1	KIT, Shock, Fore/Aft, Inc. 44 - 52
44	NSS	1	NOT SERVICED SEPARATELY, SHOCK ABSORBER
45	434-48	2	BOLT, CARRIAGE, Short NK, 1/4"-20 x 1/2", G5, Full Thd,
46	231-1444	2	NUT, LOCK, 1/4"-20, GB,
47	495-11041	2	WASHER, 3/8", SAE,
48	NSS	1	NOT SERVICED SEPARATELY, WASHER
49	NSS	1	NOT SERVICED SEPARATELY, SPACER
50	230-4715	1	NUT, LOCK, 5/16"-24, GA,
51	A49679	2	BUSHING,
52	NSS	1	NOT SERVICED SEPARATELY, BEARING, Pivot
53	1981845C1	1	ANGLE,
54	1981852C3	1	SWITCH, Air Control, Inc. 55 - 58
55	NSS	1	NOT SERVICED SEPARATELY, SWITCH
56	NSS	1	NOT SERVICED SEPARATELY, NUT
57	493-11065	1	WASHER, LOCK, Ext-Int Tooth, 5/8",
58	1987186C2	1	KNOB,
59	1990548C4	1	KIT, Inc. 60 - 64
60	NSS	2	NOT SERVICED SEPARATELY, ELBOW, 90
61	NSS	1	NOT SERVICED SEPARATELY, TUBE
62	NSS	1	NOT SERVICED SEPARATELY, TUBE
63	L18337	4	STRAP, CABLE, 9.95"-12.1" lg,
64	NSS	1	NOT SERVICED SEPARATELY, CLAMP
65	179026A1	1	TUBE, PLASTIC-RUBBER, 3/8 ID x 24-1/4
66	133422A1	2	BUMPER,
67	180596A2	1	LEVER,
68	180597A2	1	HANDLE,
69	358903A2	1	KIT, Compressor, Inc. 70 - 73
70	NSS	1	NOT SERVICED SEPARATELY, COMPRESSOR
71	495-31022	2	WASHER, #10,
72	440-1086	2	SCREW, Cross Pan Hd, #8-32 x 3/8",
73	L18337	6	STRAP, CABLE, 9.95"-12.1" lg,
74	291280A1	1	KIT, Ground Strap, Inc. 75 - 80
75	NSS	1	NOT SERVICED SEPARATELY, STRAP, Ground
76	NSS	1	NOT SERVICED SEPARATELY, SCREW
77	NSS	1	NOT SERVICED SEPARATELY, SCREW
78	NSS	2	NOT SERVICED SEPARATELY, WASHER
79	NSS	2	NOT SERVICED SEPARATELY, WASHER, Lock
80	NSS	2	NOT SERVICED SEPARATELY, STRAP, Tie Down

PDF created with pdfFactory trial version www.pdffactory.com

ссылка	Номер детали	Кол-во	Описание
81	84147460	1	HARNESS, WIRE, Cloth Seat
81	84155830	1	HARNESS, WIRE, Heated Seat

PDF created with pdfFactory trial version www.pdffactory.com

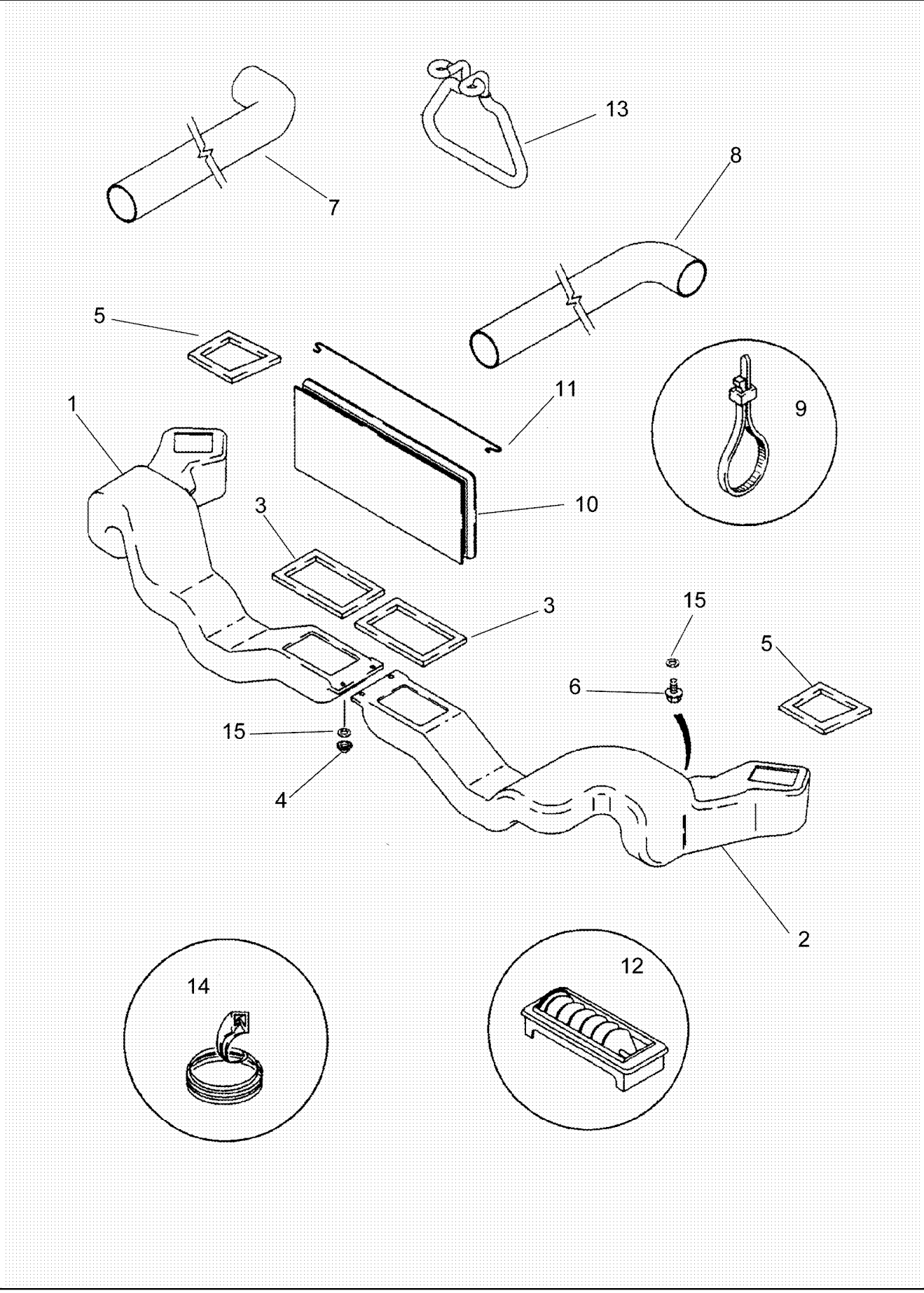

PDF created with pdfFactory trial version www.pdffactory.com

7088 AXIAL-FLOW COMBINE (EU) (4/08-)

09G-14 HEATER - AIR CONDITIONING - LOUVERS AND AIR DUCTS

ссылка	Номер детали	Кол-во	Описание
1	129225A2	1	DUCT, AIR, Left Hand
2	129227A2	1	DUCT, AIR, Right Hand
3	129228A4	2	GASKET,
4	231-51409	4	NUT, Flg, USR, #10-24,
5	196542A2	2	SEAL, A-Post
6	191216A1	6	SCREW, SELF TAPPING, Hex Wash Hd, #10-24 x 5/8",
7	380524A1	1	HOSE, Filter, 545 mm (21-1/2"), Cut From 380526A1
8	383833A1	1	HOSE, Air Duct710 mm (28"), Cut From 236559A1
9	58556C1	4	STRAP, CABLE, 14" Tie
10	120486A2	1	FILTER, Recirculation
11	143486A1	2	SUPPORT, Filter
12	87281570	11	
13	84144090	1	GUIDE,
14	1545944C1	2	SEAL, 127 mm (5"), Cut From 1330108CX
15	495-81101	6	WASHER, 7/32" x 3/4" x .060",

PDF created with pdfFactory trial version www.pdffactory.com

09G-15 HEATER - AIR CONDITIONING - CAB AIR CONDITIONING, EXTERIOR

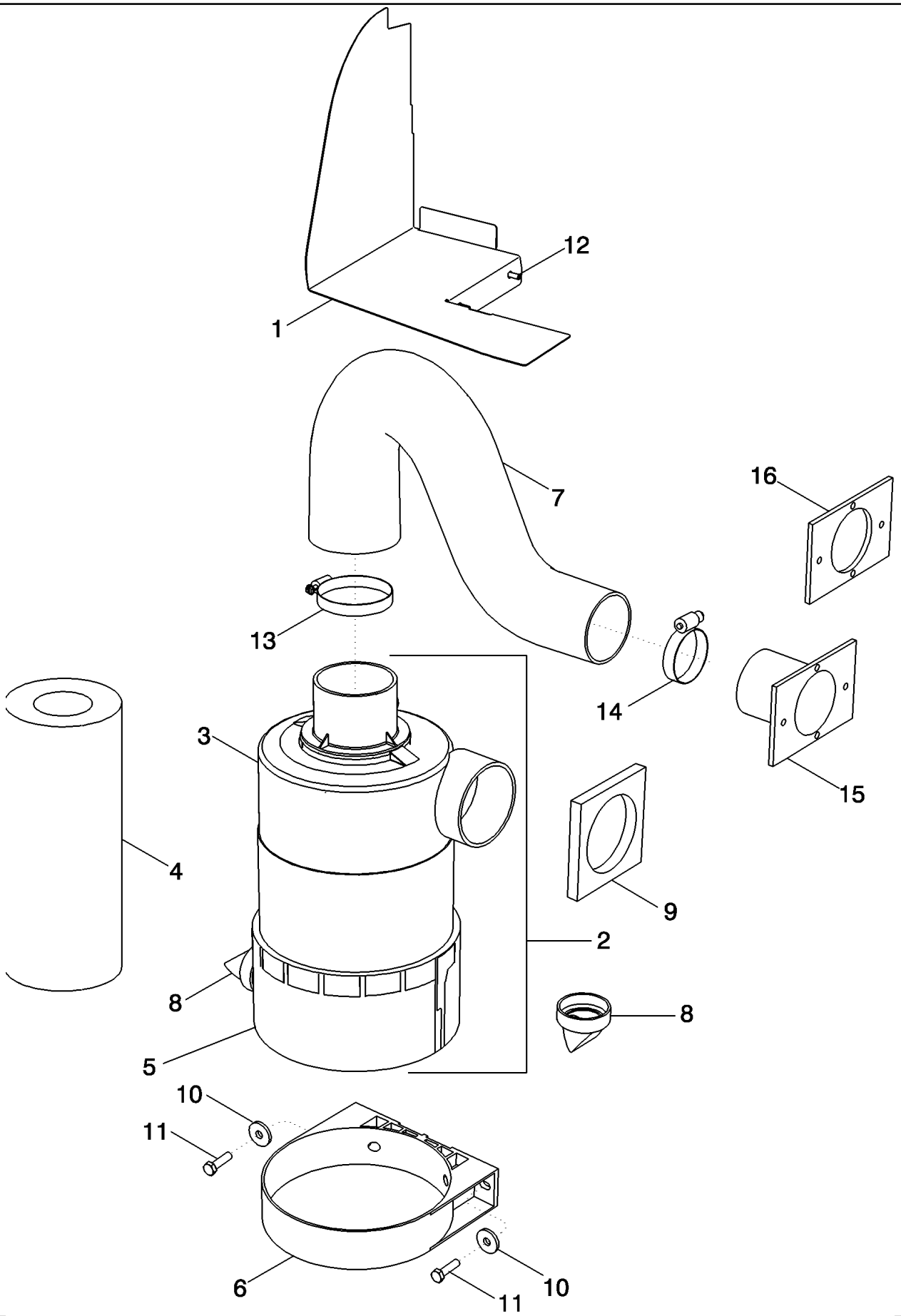

PDF created with pdfFactory trial version www.pdffactory.com

7088 AXIAL-FLOW COMBINE (EU) (4/08-)

09G-15 HEATER - AIR CONDITIONING - CAB AIR CONDITIONING, EXTERIOR

ссылка	Номер детали	Кол-во	Описание
1	87755364	1	BRACKET, Blockoff
2	84334657	1	AIR CLEANER, Inc. 3 - 5
3	NSS	1	NOT SERVICED SEPARATELY, BODY, Air Cleaner
4	84036676	1	FILTER, AIR,
5	NSS	1	NOT SERVICED SEPARATELY, COVER, Air Cleaner
6	84057675	1	SUPPORT, Air Cleaner
7	87646996	1	HOSE, Inlet
8	9809800	2	VALVE, DUST,
9	87651811	1	SEAL, Air Cleaner
10	140041	2	WASHER, M8 x 28 x 3,
11	43128	2	BOLT, Hex, M8 x 30, 8.8,
12	445394	3	RIVET, Pop, M4.8 x 12.7,
13	214-1556	1	CLAMP, HOSE, #56, 3.06/4.00 Type F Worm, W/liner,
14	214-1540	1	CLAMP, HOSE, #40, 2.06/3.00 Type F Worm, W/liner,
15	84124649	1	COVER ASSY, Air Intake, Right Hand
16	84124720	1	GASKET, Cover

PDF created with pdfFactory trial version www.pdffactory.com

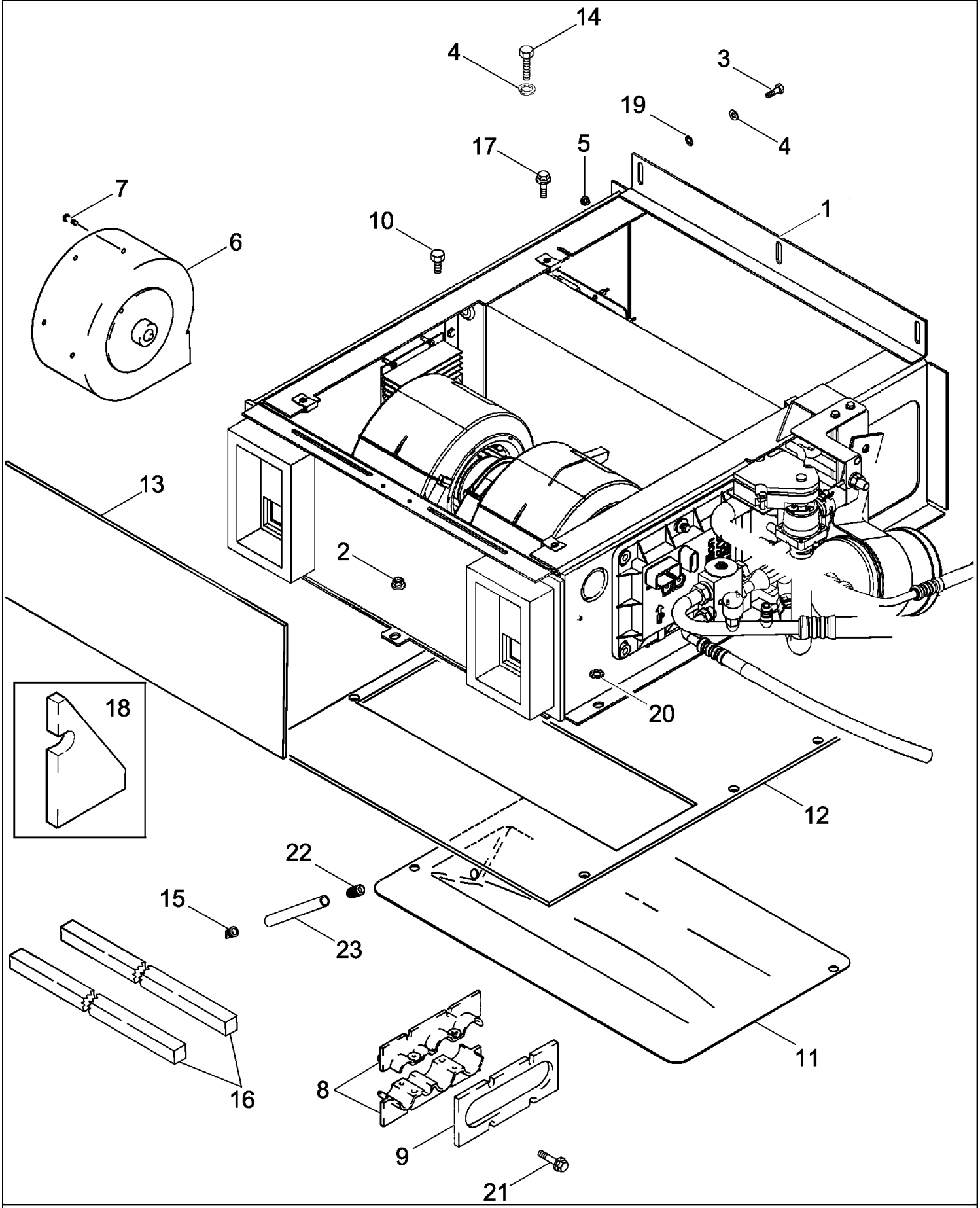

PDF created with pdfFactory trial version www.pdffactory.com

7088 AXIAL-FLOW COMBINE (EU) (4/08-)

09G-16 HEATER - AIR CONDITIONING

ссылка	Номер детали	Кол-во	Описание
1	87673824	1	HEATER UNIT, Air Conditioning, See Figure 09G-17
2	825-5148	6	NUT, M8, Flg Ser,
3	117067A1	3	SCREW, SELF TAPPING, Cross Pan Hd, #10-24 x 3/4",
4	492-11010	7	WASHER, LOCK, #10,
5	231-51409	3	NUT, Flg, USR, #10-24,
6	87107380	1	BLOWER, Cab Pressurizer
7	840-1516	5	SCREW, Cross Pan Hd, M5 x 16, 4.8,
8	125264A2	2	CLAMP,
9	125000A2	1	GASKET,
10	191216A1	4	SCREW, SELF TAPPING, Hex Wash Hd, #10-24 x 5/8",
11	121595A2	1	HOUSING, Drip Pan
12	279438A1	1	INSULATOR, Center Floor
13	279305A2	1	INSULATOR, Rear Wall
14	276-13520	4	SCREW, SELF TAPPING, Hex Hd, #10 x 1 1/4",
15	109239C2	2	VALVE, Drain
16	192269A1	2	FOAM, 500 mm (19-5/8"), Cut From 1971350C1
17	458-512	4	BOLT, Hex Flg, 5/16"-18 x 3/4", G5, Full Thd,
18	297573A1	1	SEAL, Temperature Probe
19	493-81000	3	WASHER, LOCK, Ext-Int Tooth, #10,
20	493-11039	1	WASHER, LOCK, 3/8", Int-Ext Tooth,
21	191216A1	14	SCREW, SELF TAPPING, Hex Wash Hd, #10-24 x 5/8",
22	1250522C3	2	ELBOW, Drain
23	122116A1	2	HOSE, 75", Cut From 198901C1

PDF created with pdfFactory trial version www.pdffactory.com

09G-17 BOX ASSY - AIR CONDITIONING

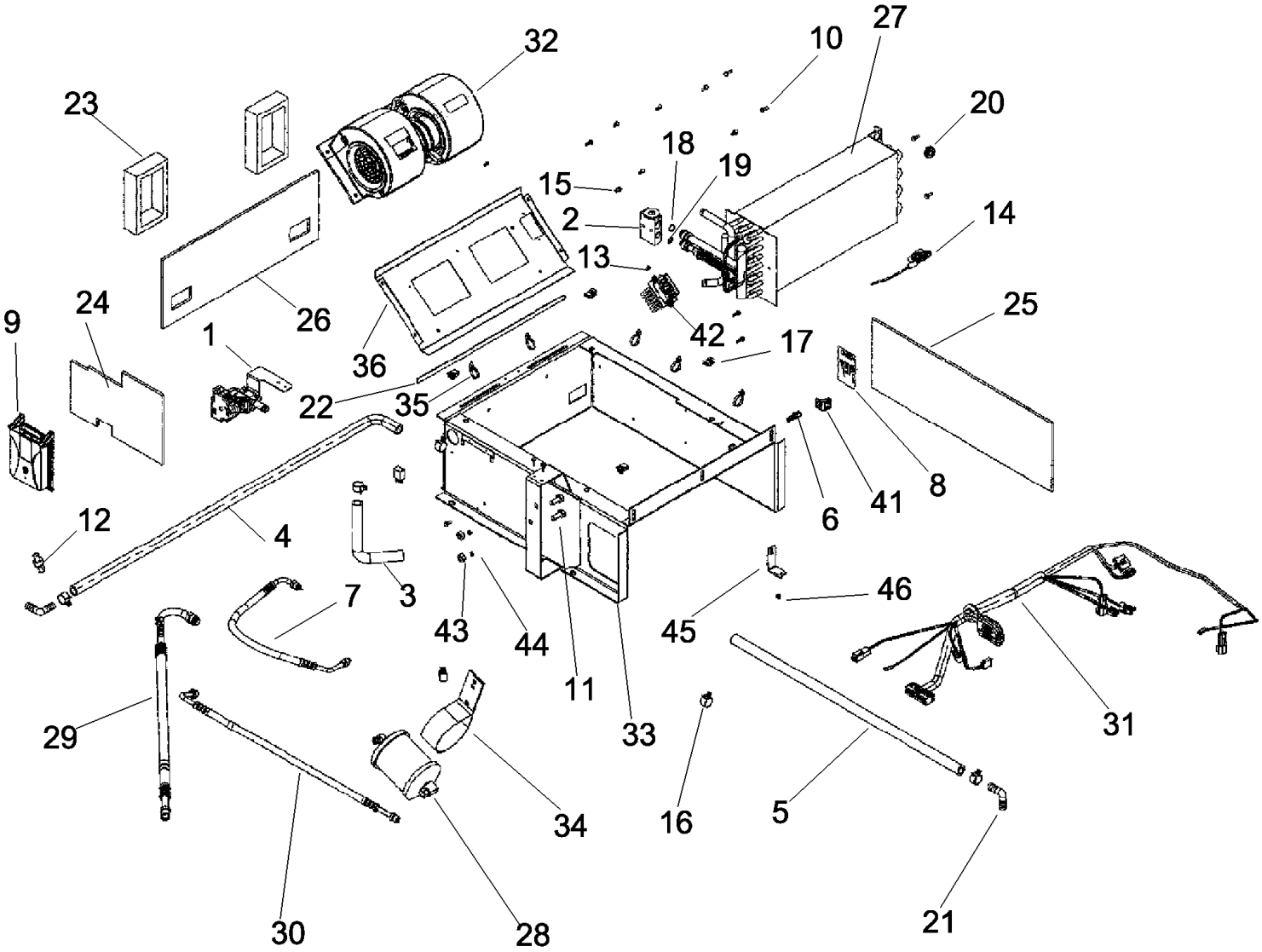

PDF created with pdfFactory trial version www.pdffactory.com

7088 AXIAL-FLOW COMBINE (EU) (4/08-)

09G-17 BOX ASSY - AIR CONDITIONING

ссылка	Номер детали	Кол-во	Описание
	87673824	1	HEATER UNIT, Air Conditioning, Inc. 1 - 46
1	87333840	1	VALVE, Control, Heater
	449221A1	1	BODY, Core Assy., Inc 2,18,19,27
2	386535A1	1	VALVE, Thermal Expansion, Not Serviced Separately, Order 449221A
3	377547A1	1	HOSE, Valve to Core
4	377551A1	1	HOSE, Return
5	1958774C1	1	HOSE, Supply, 710 mm (28"), Cut From 97252CX
6	87454442	1	SENSOR, Cab Temperature
7	124912A2	1	HOSE, TEV To Receiver Dryer, 540 mm (21- 1/4")
8	NSS	1	NOT SERVICED SEPARATELY, PLATE, Decal Name, Kysor Logo
9	87365492	1	MODULE, ATC
10	281-54510	15	SCREW, SELF TAPPING, Hex Wash Hd, #10 x 5/8",
11	614-10025	2	BOLT, Hex, M10 x 25, 8.8, Full Thd,
12	87323829	1	SWITCH, A/C LOW PRESSURE, Low Pressure, Air Conditioning
13	260-1448	2	SCREW, SELF TAPPING, Cross Pan Hd, #8 x 1/2",
14	184720A2	1	SENSOR, Temperature, Evaporator
15	87333919	1	SCREW, Taplite Slot
16	1954736C1	6	CLAMP, HOSE, No. 24
17	488837C1	4	NUT, 5/16
18	128485A1	1	O-RING, 9/16 ID x 1/16
19	128484A1	1	O-RING, 7/16 ID x 1/16
20	248-1243	1	GROMMET, 1/2" ID x 13/16" Groove Dia, Diag Cut,
21	127083A1	2	ELBOW,
22	377566A1	1	GASKET, 3ft
23	124999A1	2	GASKET, Louver
24	87333847	1	INSULATION, FOAM, Left Hand
25	279230A2	1	INSULATOR, Right Hand
26	279233A1	1	INSULATOR, Center
27	377560A1	1	CORE-COMPRESSOR, Evaporator And Heater, Not Serviced Separately, Order 449221A
28	1990758C2	1	RECEIVER-DRYER,
29	124913A2	1	HOSE, TEV To Cab Bulkhead900 mm (35-7/16")
30	124914A1	1	HOSE, 662 mm (26-1/8"), Receiver-Dryer to Cab Wall
31	87333848	1	HARNESS, WIRE, Heating and Air Conditioning
32	323610A1	1	BLOWER, Cab, 12 Volt
33	87333857	1	BOX, Air Conditioning Module
34	377562A1	1	BRACKET, Receiver-Drier
35	702093C1	6	STRAP, CABLE,
36	87333863	1	PLATE, MOUNTING,
37	377559A1	4	STRAP,
38	377567A1	1	SEAL, 8ft (Not Shown)
39	87333865	1	INSULATION, FOAM, (Not Shown)

PDF created with pdfFactory trial version www.pdffactory.com

ссылка	Номер детали	Кол-во	Описание
40	1978896C1	4	STRAP, 30.6" Tie-down (Not Shown)
41	87318294	1	CLIP, Sensor
42	87306706	1	TERMINAL CONNECTOR, Blower Motor
43	829-1410	2	NUT, M10, Cl 10,
44	892-11010	2	WASHER, LOCK, M10,
45	87351204	1	BRACKET, Sensor
46	231-14408	1	NUT, LOCK, #8-32, GB,

PDF created with pdfFactory trial version www.pdffactory.com

09G-18 HEATER - AIR CONDITIONING - COMPRESSOR TO CONDENSER AND CAB/CHASSIS CONNECTIONS

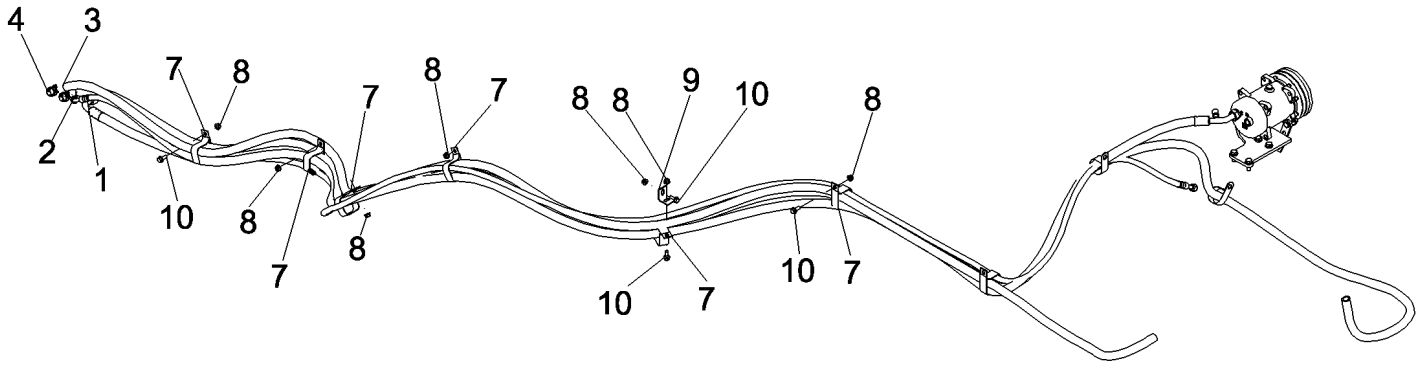

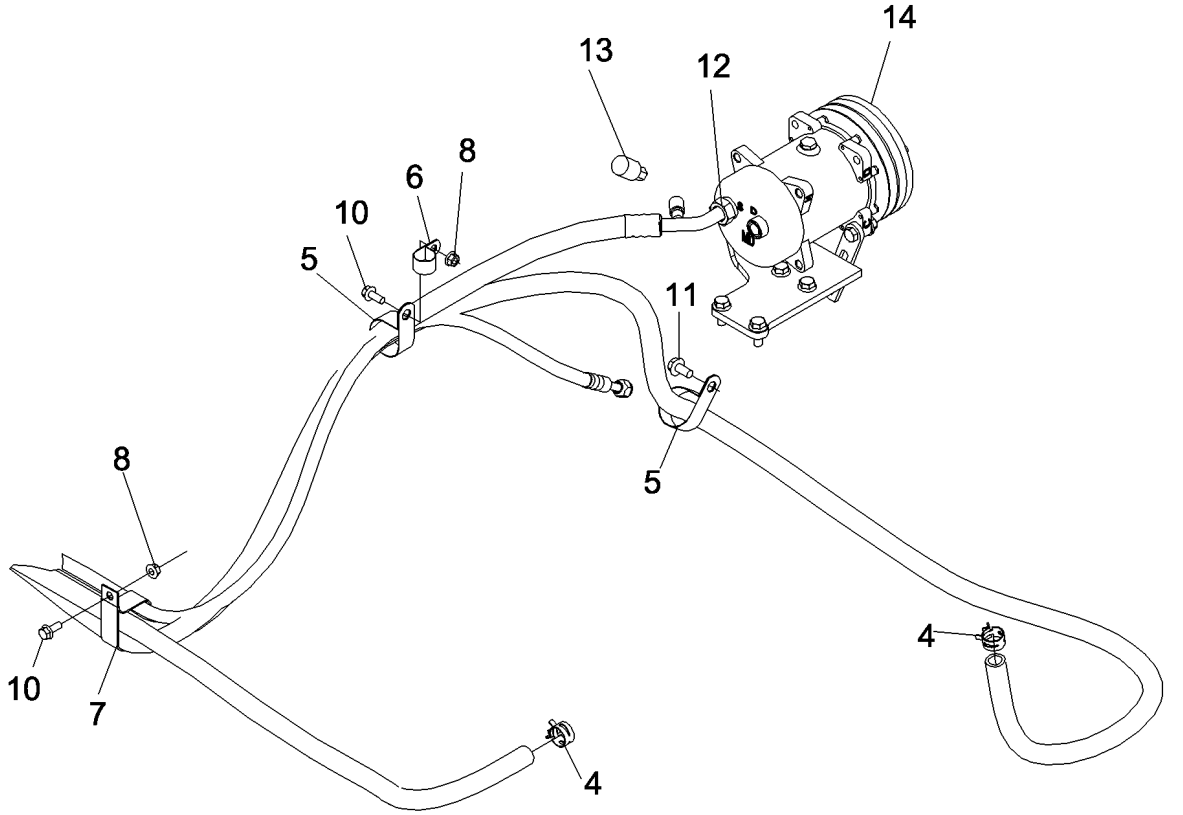

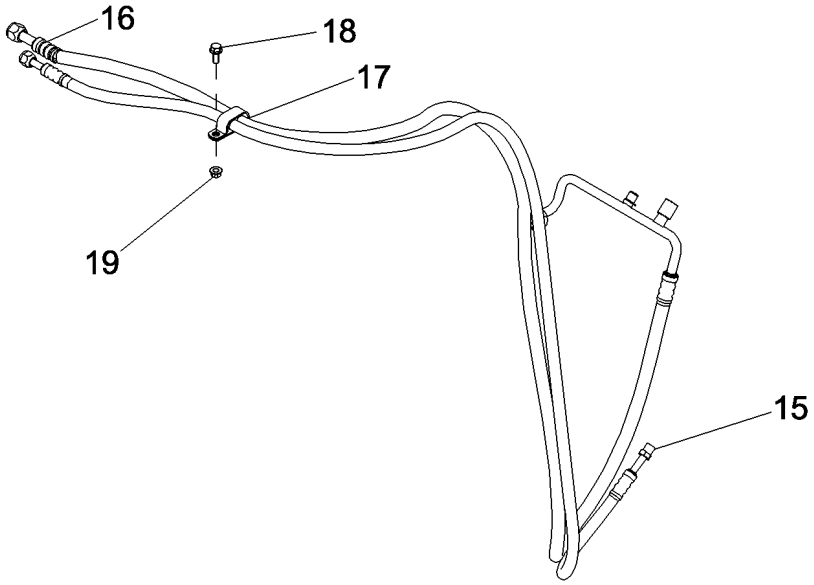

PDF created with pdfFactory trial version www.pdffactory.com

7088 AXIAL-FLOW COMBINE (EU) (4/08-)

09G-18 HEATER - AIR CONDITIONING - COMPRESSOR TO CONDENSER AND CAB/CHASSIS CONNECTIONS

ссылка	Номер детали	Кол-во	Описание
1	87564596	1	HOSE ASSY., A/C Liquid Cab to Condensor
2	87352176	1	HOSE ASSY., Hi-Temp Heater
3	87687485	1	HOSE, Heater
4	1954736C1	4	CLAMP, HOSE, Heater
5	515-25476	2	CLAMP, 1 7/8", Insul, 1/2" Bolt,
6	515-23254	1	CLAMP, 1", Insul, 3/8" Bolt,
7	1301387C2	7	CLIP,
8	86507066	9	NUT, M8 x 1.25, Flg, Cl 10,
9	1301560C2	1	STIFFENER, Rotary Fan Switch
10	87656137	6	BOLT, Hex Flg, M8 x 20, 10.9, Full Thd,
11	857-10020	1	BOLT, Hex Flg, M10 x 20, 10.9,
12	87754220	1	TUBE ASSY., A/C Suction
13	369798A2	1	SWITCH, A/C High Pressure
14	REF	1	INSTRUCTION, COMPRESSOR, Air Conditioning, 12V Poly-V, See Figure 09G-19
15	87565211	1	HOSE ASSY., Air Conditioning Outlet To Cab
16	87754217	1	HOSE ASSY., Compressor To Condenser
17	485093C1	1	CLAMP,
18	87656137	1	BOLT, Hex Flg, M8 x 20, 10.9, Full Thd,
19	86507066	1	NUT, M8 x 1.25, Flg, Cl 10,

PDF created with pdfFactory trial version www.pdffactory.com

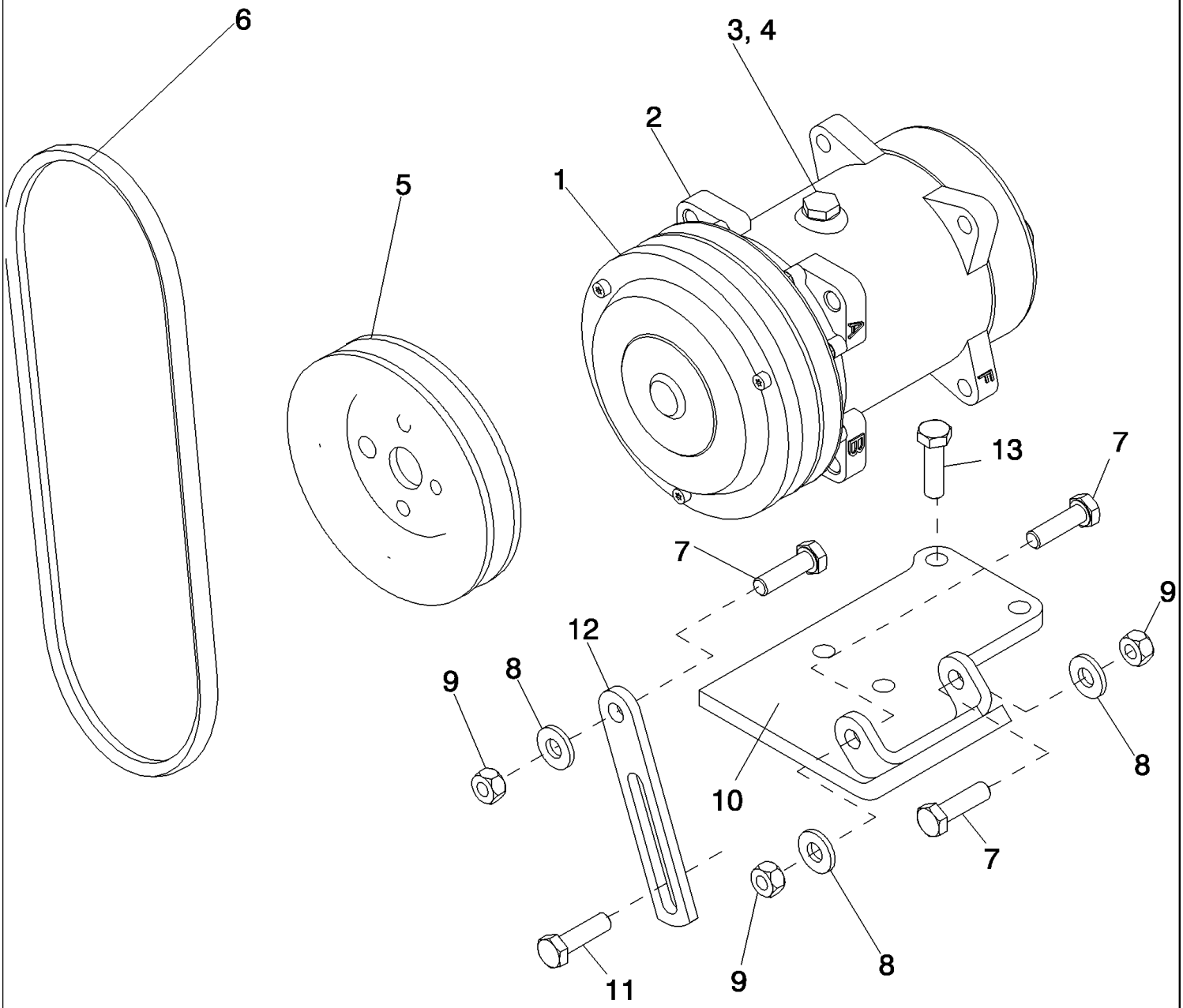

PDF created with pdfFactory trial version www.pdffactory.com

7088 AXIAL-FLOW COMBINE (EU) (4/08-)

09G-19 AIR CONDITIONING - COMPRESSOR MOUNTING AND DRIVE

ссылка	Номер детали	Кол-во	Описание
	86993462	1	COMPRESSOR, AIRCOND, Inc. 1 - 4
1	135324A2	1	CLUTCH,
2	NSS	1	NOT SERVICED SEPARATELY, COMPRESSOR
3	A49667	1	PLUG,
4	128483A1	1	O-RING, 5/16 ID x 1/16
5	431716A1	1	PULLEY, Drive
6	87311867	1	BELT, Air Conditioning Compressor
7	614-10035	3	BOLT, Hex, M10 x 35, 8.8, Full Thd,
8	896-15010	3	WASHER, M10 x 24.5 x 3, HT,
9	832-41410	3	NUT, LOCK, M10 x 1.5, Cl 10,
10	87311866	1	BRACKET,
11	905-10025	1	BOLT, Hex Serr Flg, M10 x 25,
12	87000300	1	BRACKET,
13	87698836	4	BOLT,

PDF created with pdfFactory trial version www.pdffactory.com

09G-20 CAB - EXTERIOR REAR VIEW MIRROR

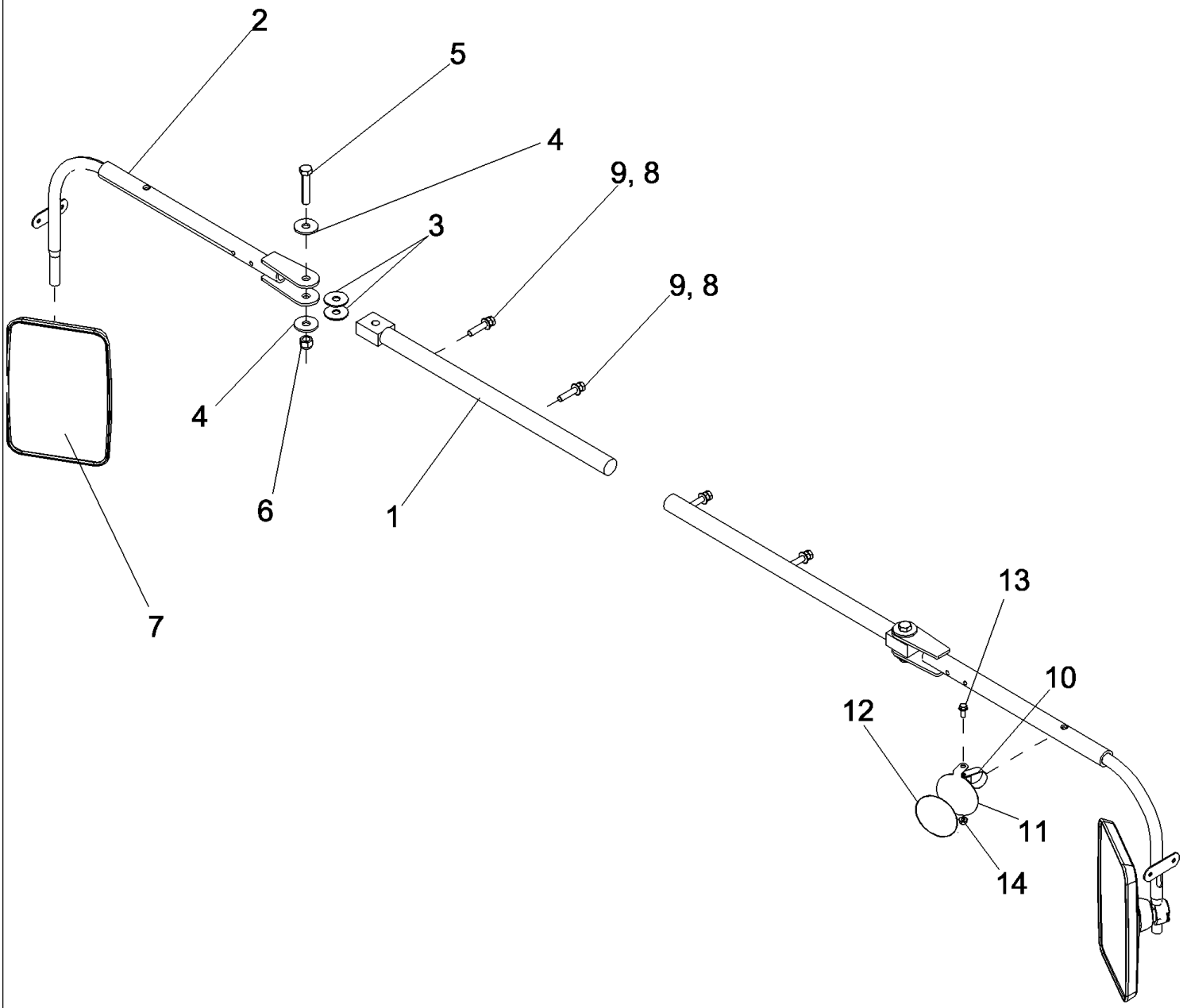

PDF created with pdfFactory trial version www.pdffactory.com

7088 AXIAL-FLOW COMBINE (EU) (4/08-)

09G-20 CAB - EXTERIOR REAR VIEW MIRROR

ссылка	Номер детали	Кол-во	Описание
1	87617888	2	SUPPORT ASSY., Inner Mirror Bar
2	87652360	2	BRACKET, Outer Mirror Weldment
3	87646316	4	WASHER, Mirror Pivot Friction
4	495-81030	4	WASHER, 21/32" x 2" x .179",
5	827-16080	2	BOLT, Hex, M16 x 80, 10.9,
6	412066	2	NUT, LOCK, M16 x 2, Cl 8,
7	248541A1	2	MIRROR,
8	614-12060	4	BOLT, Hex, M12 x 60, 8.8, Full Thd,
9	825-51412	4	NUT, M12, Flg Ser,
10	515-23381	1	CLAMP, 1 1/2", Insul, 3/8" Bolt,
11	84158925	1	SUPPORT,
12	87564375	1	MIRROR,
13	87656137	1	BOLT, Hex Flg, M8 x 20, 10.9, Full Thd,
14	825-2408	1	NUT, M8 x 1.25, Flg, Cl 8,

PDF created with pdfFactory trial version www.pdffactory.com

7088 AXIAL-FLOW COMBINE (EU) (4/08-)

09G-21 RIGHT HAND FRONT MIRROR, GERMANY ONLY

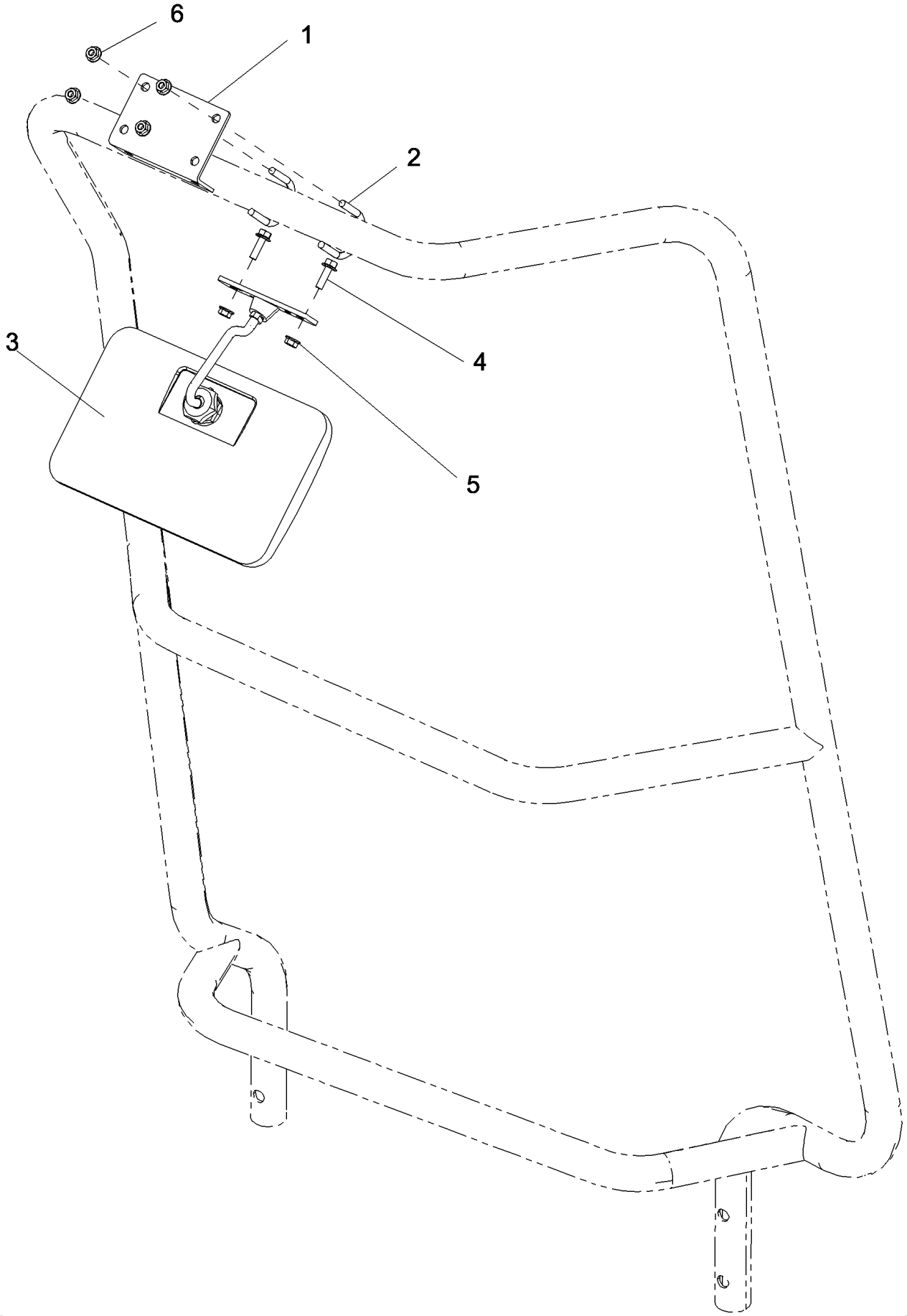

PDF created with pdfFactory trial version www.pdffactory.com

7088 AXIAL-FLOW COMBINE (EU) (4/08-)

09G-21 RIGHT HAND FRONT MIRROR, GERMANY ONLY

ссылка	Номер детали	Кол-во	Описание
1	87533986	1	BRACKET, Mirror
2	87703800	2	U-BOLT,
3	87517006	1	MIRROR,
4	87675531	2	BOLT,
5	86050300	2	NUT, M6 x 1, Flg, Cl10,
6	87301498	4	NUT,

PDF created with pdfFactory trial version www.pdffactory.com

09G-22 FIRE EXTINGUISHER

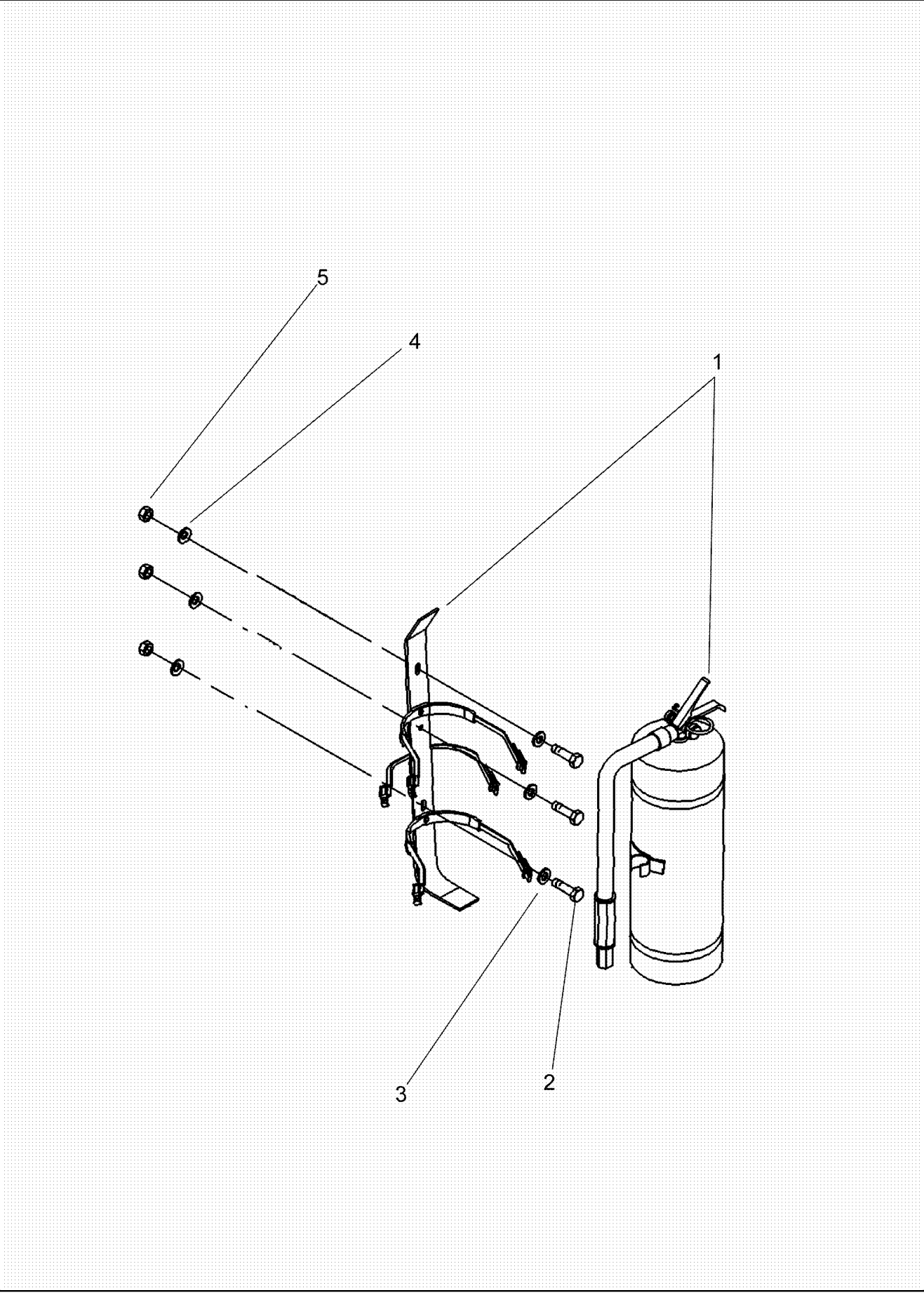

PDF created with pdfFactory trial version www.pdffactory.com

7088 AXIAL-FLOW COMBINE (EU) (4/08-)

09G-22 FIRE EXTINGUISHER

ссылка	Номер детали	Кол-во	Описание
1	84440547	1	FIRE EXTINGUISHER,
2	43127	2	BOLT, Hex, M8 x 25, 8.8,
3	140016	2	WASHER, M8 x 16 x 1.6,
4	412650	2	WASHER, SPRING, Belleville, M8,
5	9706690	2	NUT, M8, Cl 8,

PDF created with pdfFactory trial version www.pdffactory.com

09G-23 SUNVISOR

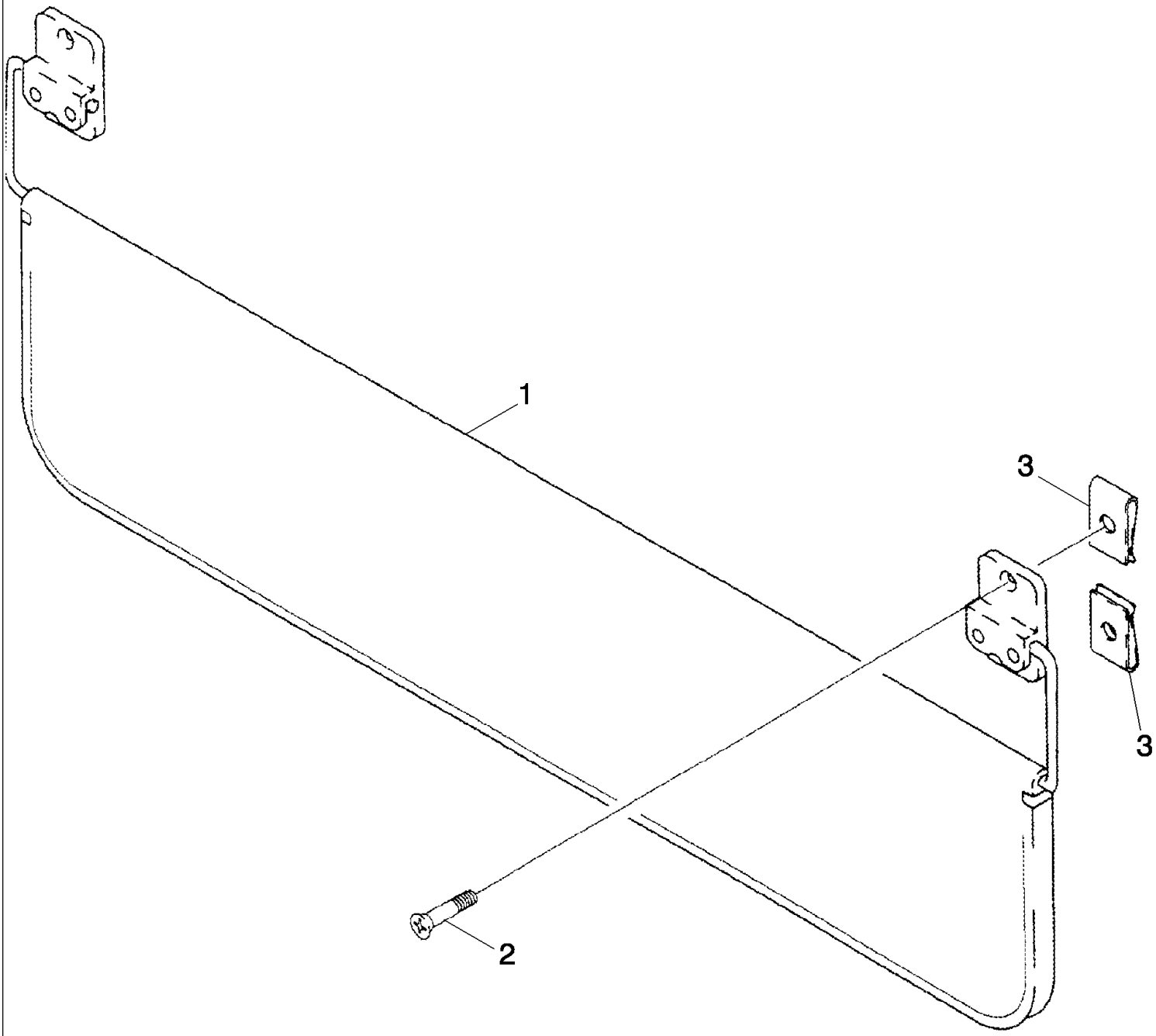

PDF created with pdfFactory trial version www.pdffactory.com

7088 AXIAL-FLOW COMBINE (EU) (4/08-)

09G-23 SUNVISOR

ссылка	Номер детали	Кол-во	Описание
1	87390618	1	VISOR, SUN,
2	260-16524	4	SCREW, SELF TAPPING, Cross Pan Hd, #10 x 1 1/2",
3	60-6708T1	4	NUT, SPECIAL,

PDF created with pdfFactory trial version www.pdffactory.com

09G-24 NON-YIELD MONITOR CAB COMPLETING

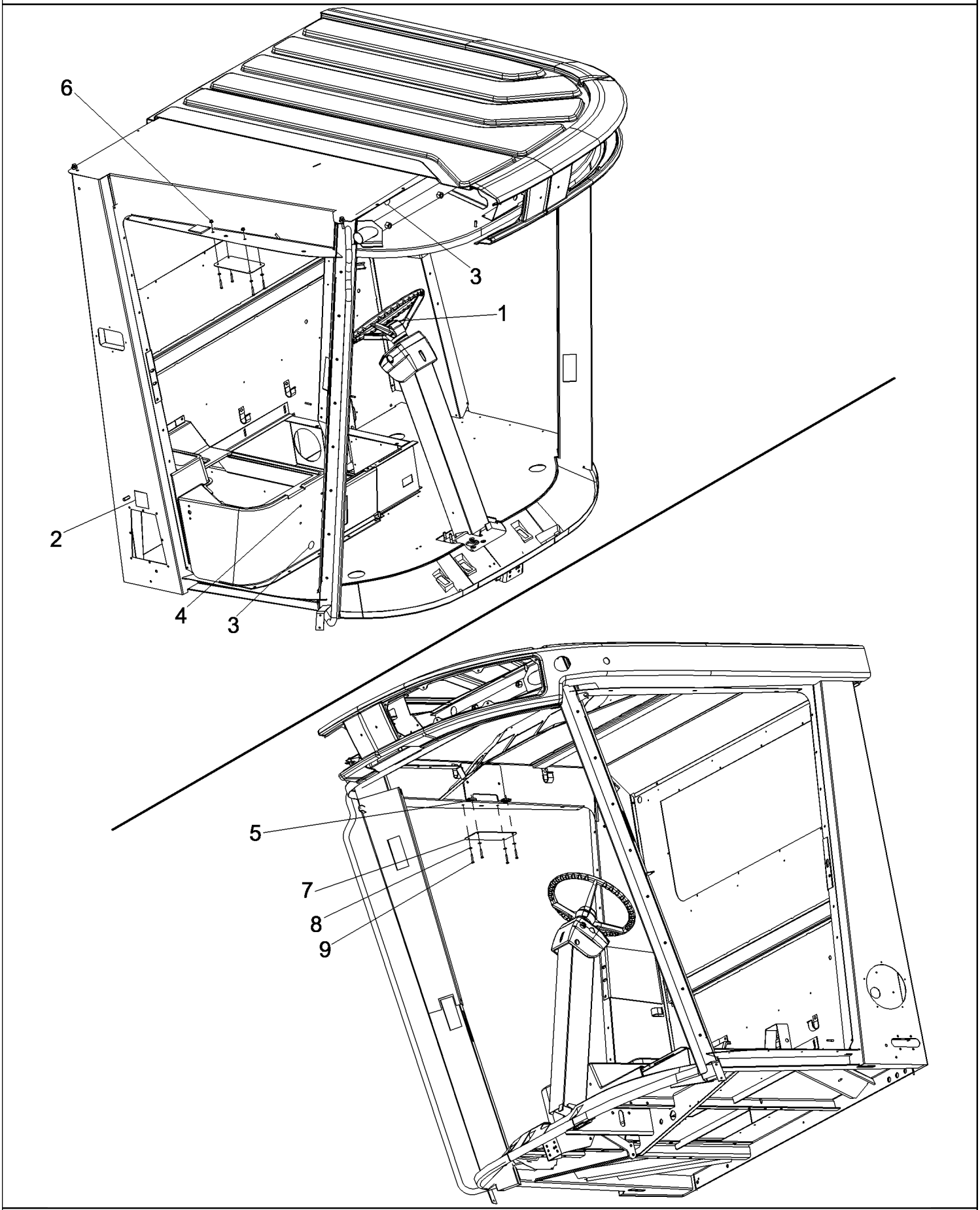

PDF created with pdfFactory trial version www.pdffactory.com

7088 AXIAL-FLOW COMBINE (EU) (4/08-)

09G-24 NON-YIELD MONITOR CAB COMPLETING

ссылка	Номер детали	Кол-во	Описание
1	187177A1	1	CAP, Steering Wheel
2	224636A1	1	DECAL, Connector Cover
3	353-411	2	PLUG, Dome, 1.000" hole, Nylon,
4	353-400	4	PLUG, Dome, .250" hole, Nylon,
5	131-893	2	NUT, Tinn, U, #10-24,
6	231-51409	2	NUT, Flg, USR, #10-24,
7	87578146	1	PLATE ASSY., Monitor Holes Cover
8	195-81029	4	WASHER, #10,
9	276-13520	4	SCREW, SELF TAPPING, Hex Hd, #10 x 1 1/4",

PDF created with pdfFactory trial version www.pdffactory.com

09G-25 PRECISION FARMING CAB COMPLETING

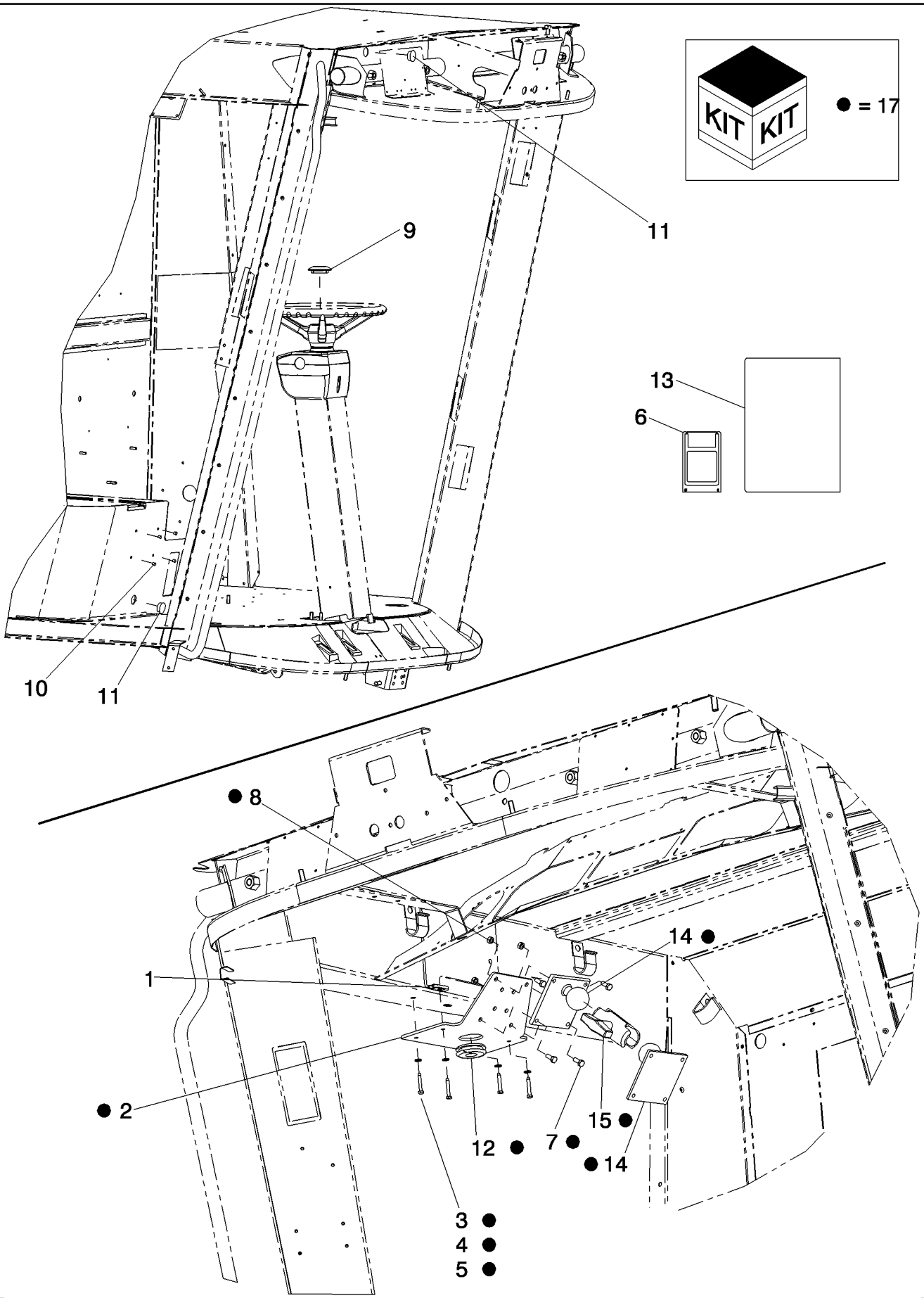

PDF created with pdfFactory trial version www.pdffactory.com

7088 AXIAL-FLOW COMBINE (EU) (4/08-)

09G-25 PRECISION FARMING CAB COMPLETING

ссылка	Номер детали	Кол-во	Описание
1	131-893	2	NUT, Tinn, U, #10-24,
2	87621924	1	BRACKET, Display Mounting
3	195-81029	4	WASHER, #10,
4	276-13520	4	SCREW, SELF TAPPING, Hex Hd, #10 x 1 1/4",
5	231-51409	2	NUT, Flg, USR, #10-24,
6	84187624	1	MODULE, 4 GB Compact Flash And Adapter
7	86508568	4	SCREW, Hex, M6 x 16, 8.8,
8	86500688	4	NUT, M6, Cl 10,
9	238697A1	1	CAP, AFS Steering Wheel
10	353-400	4	PLUG, Dome, .250" hole, Nylon,
11	353-411	2	PLUG, Dome, 1.000" hole, Nylon,
12	87330628	1	GROMMET,
13	87745104	1	SOFTWARE, CIH Desktop V8.0
13	87745105	1	SOFTWARE, CIH Desktop V8.5
14	87386398	2	ARM, SUPPORTING,
15	87645094	1	ARM ASSY.,
16	86588450	4	WASHER, M6 x 12 x 1.6 Thk, (Not Shown)
17	87719252	1	DIA KIT, HARVESTER, Touch Screen Display Mounting, Inc. 2-5, 7, 8, 12, 14-16

PDF created with pdfFactory trial version www.pdffactory.com

7088 AXIAL-FLOW COMBINE (EU) (4/08-)

09G-26 WHEEL CHOCK, GERMANY ONLY

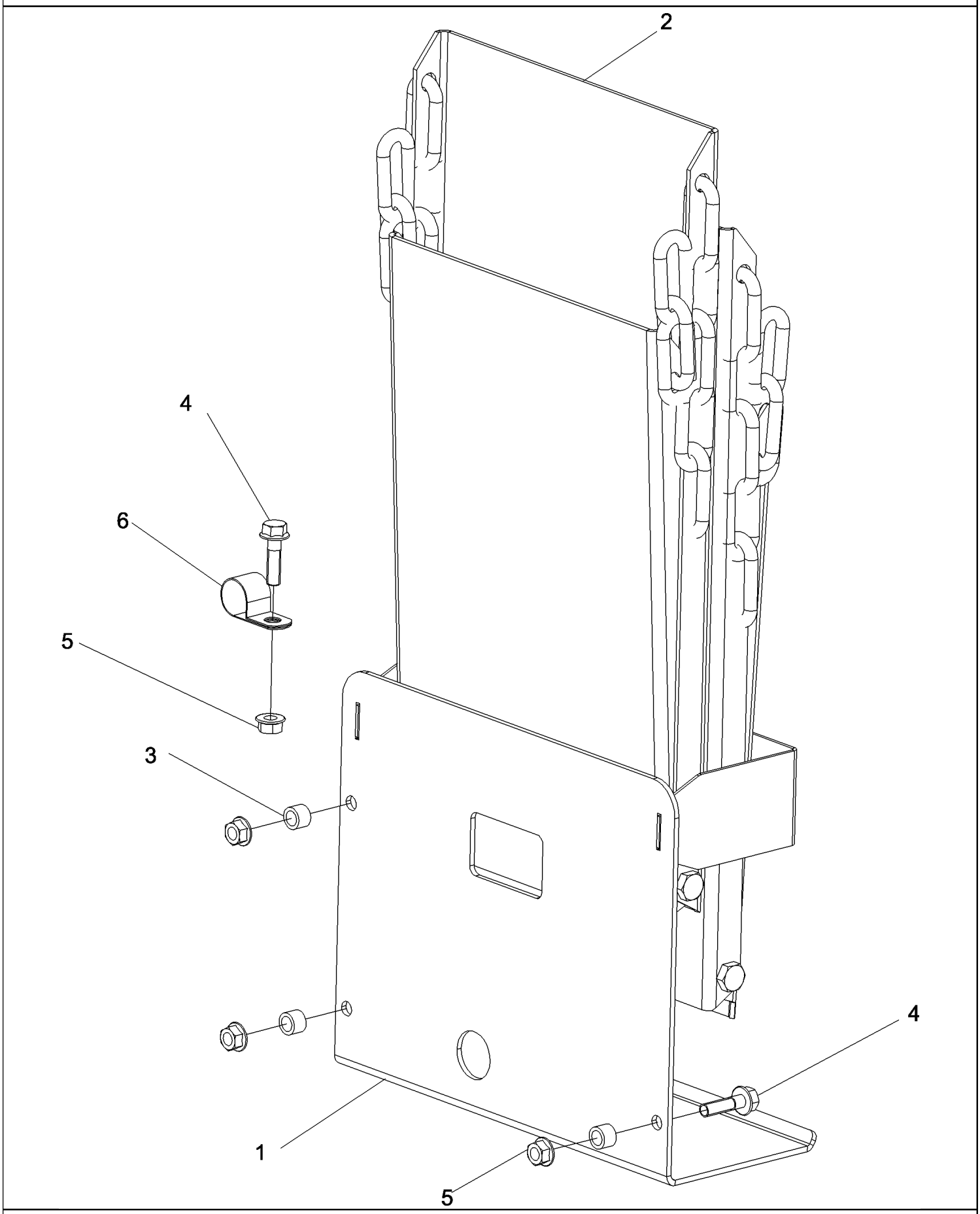

PDF created with pdfFactory trial version www.pdffactory.com

7088 AXIAL-FLOW COMBINE (EU) (4/08-)

09G-26 WHEEL CHOCK, GERMANY ONLY

ссылка	Номер детали	Кол-во	Описание
1	87708386	1	BRACKET, Wheel Chock, Double
2	452769	2	WHEEL CHOCK,
3	87342191	3	WASHER,
4	87030775	4	BOLT, Hex Flg, M8 x 30, 10.9, Full Thd,
5	86507066	4	NUT, M8 x 1.25, Flg, Cl 10,
6	515-23222	1	CLAMP, 7/8", Insul, 3/8" Bolt,

PDF created with pdfFactory trial version www.pdffactory.com

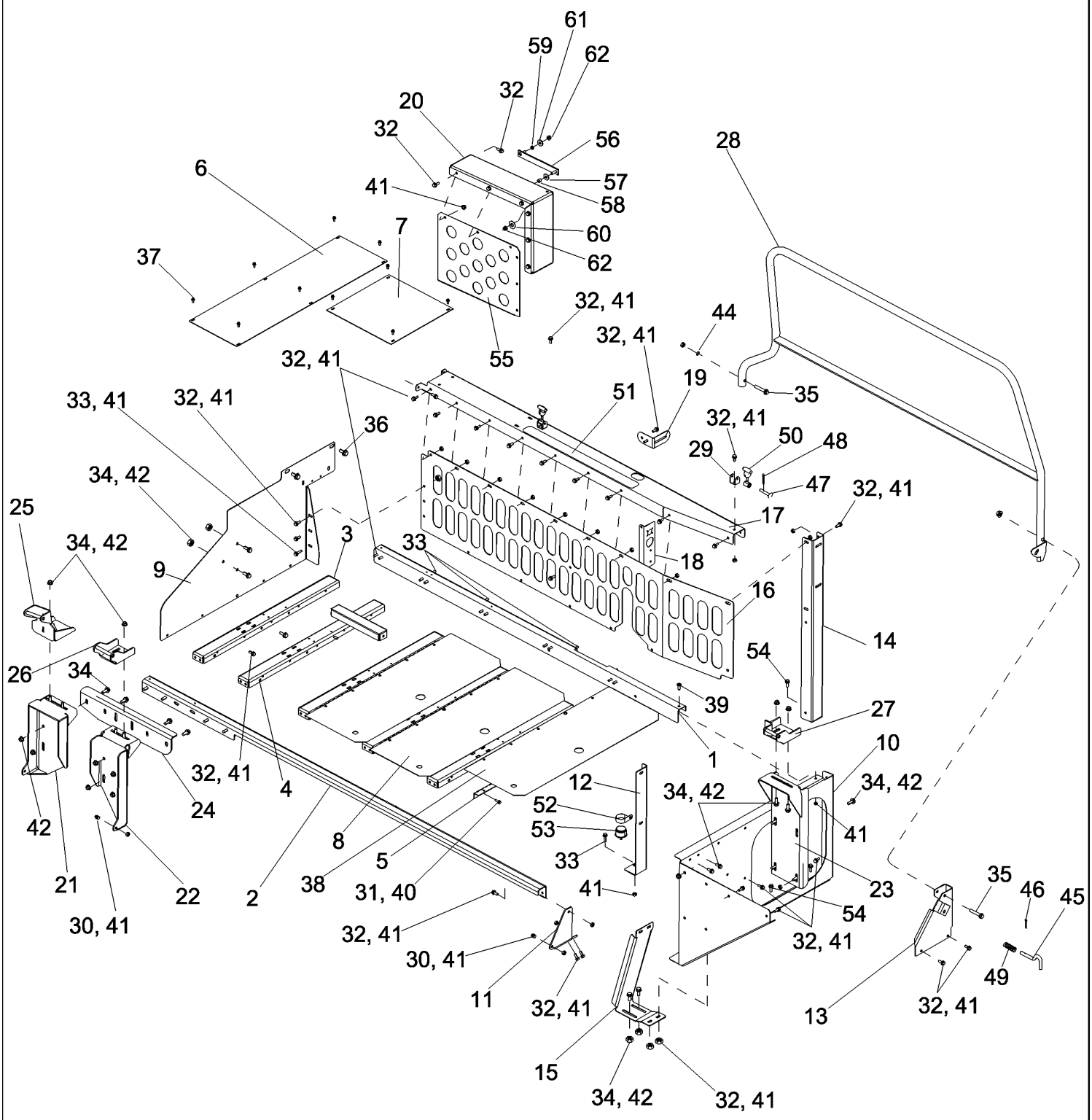

PDF created with pdfFactory trial version www.pdffactory.com

7088 AXIAL-FLOW COMBINE (EU) (4/08-)

09H-01 DECK, SERVICE

ссылка	Номер детали	Кол-во	Описание
1	87681897	1	CHANNEL, Service Deck Inner
2	87758006	1	BRACE, Service Deck Outer
3	87681902	5	CHANNEL, Service Deck Middle
4	1979830C1	1	SUPPORT, Service Deck
5	186695C1	3	HINGE, Door Separator Drive Housing
6	87613528	1	DOOR, Engine Compartment Front
7	1979827C2	1	PLATE, Engine Compartment
8	87613526	3	DOOR, Service Deck
9	87756319	1	SHEET ASSY., Service Deck Front Mounting
10	87489959	1	SHEET ASSY., Service Deck Rear Support
11	87690901	1	BRACKET, Left Hand Rear Panel, Rear Strut Mounting
12	87756246	1	BRACE, Service Deck Rear Middle
13	87623009	1	BRACKET, Service Deck Handrail
14	87682232	1	SHEET, Service Deck Rear Inner
15	87682219	1	SHEET, Service Deck Rear Outer
16	87682234	1	SHEET, Engine Compartment Side
17	87682236	1	CHANNEL, Engine Cover Support
18	87682250	1	BRACKET, Engine Harness Bulkhead
19	87641776	1	BRACKET, Engine Handrail Mounting
20	84151951	1	CHANNEL, Rotor Door Prop Rod Side
21	87695802	1	SUPPORT, Support, Left Hand
22	87687407	1	SUPPORT, Support
23	87687409	1	SUPPORT, Support
24	87757250	1	BRACE, Support
25	87623733	1	BRACKET, Rear Hinge
26	87663953	1	BRACKET, Left Hand Rear Hinge
27	87695863	1	HINGE, Left Hand
28	87755998	1	HANDRAIL, Service Deck
29	87692827	2	BRACKET, Rubber Hook Anchor
30	86634307	3	STUD,
31	87675531	15	BOLT,
32	87656137	71	BOLT, Hex Flg, M8 x 20, 10.9, Full Thd,
33	87030775	6	BOLT, Hex Flg, M8 x 30, 10.9, Full Thd,
34	87698836	23	BOLT,
35	87656139	2	BOLT,
36	87343550	2	BOLT,
37	86625199	10	SCREW, SELF TAPPING, Hex Flg Hd, M6 x 13,
38	87682398	15	SCREW,
39	87624708	1	SCREW,
40	86050300	30	NUT, M6 x 1, Flg, Cl10,
41	86507066	82	NUT, M8 x 1.25, Flg, Cl 10,

PDF created with pdfFactory trial version www.pdffactory.com

ссылка	Номер детали	Кол-во	Описание
42	86050279	23	NUT, M10 x 1.5, Flg, Cl 10,
43	87547587	2	NUT,
44	86511323	1	WASHER, M10 x 20 x 2,
45	1319740C2	1	PIN, Ladder Support
46	38-1813	1	PIN, LOCK, 1/8" x 13/16", Slotted,
47	439-1424	2	PIN, HEADED, 1/4" x 1 1/2", G2,
48	432-812	2	PIN, SPLIT (COTTER), 1/8" x 3/4",
49	540815R2	1	SPRING,
50	494307C1	2	LATCH, Hood
51	D80270	1	STRIP, Non - Slip
52	515-23412	1	CLAMP, 1 5/8", Insul, 3/8" Bolt,
53	86999949	1	FILTER, Air Vent
54	87698833	3	BOLT,
55	87627439	1	SHEET, Rotor Drive Cover
56	1302413C1	1	PROP, Link, Door Hold Up
57	495-81116	1	WASHER, .344" x 1" x .060",
58	87026609	1	SPACER, 1/2" Pipe x 3/8",
59	567532R1	1	WASHER,
60	495-81024	1	WASHER, 17/32" x 1 1/4" x .060",
61	495-81117	1	WASHER, .344" x 1" x .120",
62	231-5315	2	NUT, LOCK, Flg, 5/16"-18,

PDF created with pdfFactory trial version www.pdffactory.com

09H-02 ENGINE COVER

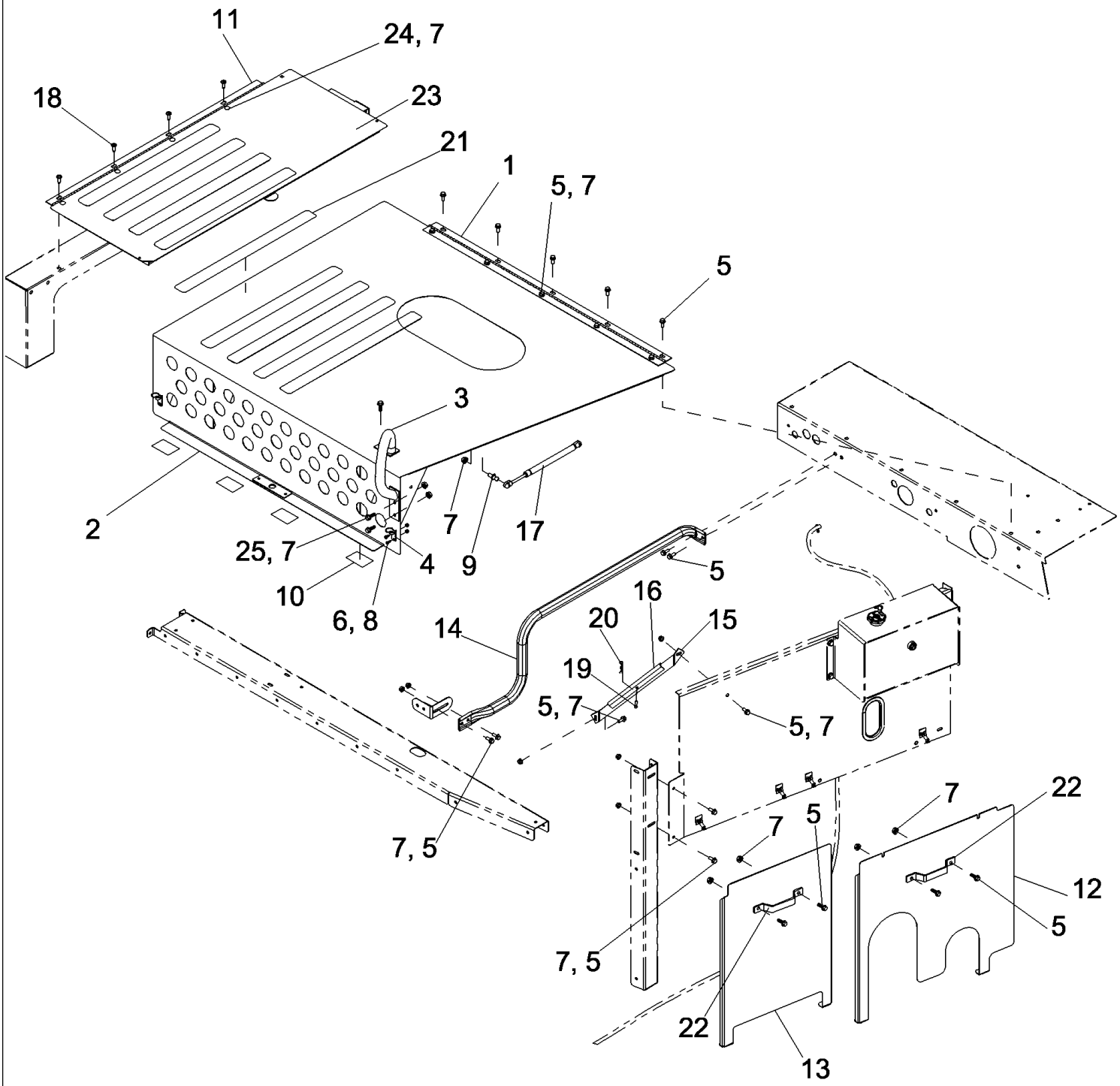

PDF created with pdfFactory trial version www.pdffactory.com

7088 AXIAL-FLOW COMBINE (EU) (4/08-)

09H-02 ENGINE COVER

ссылка	Номер детали	Кол-во	Описание
1	442774A2	1	HINGE, Engine Cover Door
2	87727317	1	DOOR ASSY., Engine
3	445183A2	1	HANDRAIL, Engine Service Deck
4	764071C2	2	BRACKET, Hood Panel Hook
5	87656137	22	BOLT, Hex Flg, M8 x 20, 10.9, Full Thd,
6	80043982	4	SCREW,
7	86507066	24	NUT, M8 x 1.25, Flg, Cl 10,
8	86507064	4	NUT,
9	83952214	2	PIN, BALL,
10	86984222	4	PAD, Adhesive Back
11	87587645	1	HINGE, Rotor Drive Cover
12	87476842	1	SHEET METAL, Engine Air, Right Hand
13	87680121	1	SHEET ASSY., Engine Air, Left Hand
14	87627111	1	HANDRAIL, Engine Compartment
15	87633580	1	STRAP, Engine Cover Support
16	448354A1	1	BRACKET, Air Cylinder Lockout
17	446346A1	2	GAS STRUT, Engine Door Lift
18	87624708	4	SCREW,
19	439-1420	1	PIN, HEADED, 1/4" x 1 1/4",
20	473443R1	1	PIN,
21	D80270	9	STRIP,
22	87686906	2	LATCH, Door Handle
23	87679326	1	DOOR ASSY., Rotor Drive Cover
24	86507486	4	BOLT, CARRIAGE, Short NK, M8 x 20, Cl8.8, Full Thd,
25	87681207	3	BOLT,

PDF created with pdfFactory trial version www.pdffactory.com

09H-03 BAFFLE ASSY, ENGINE COVER

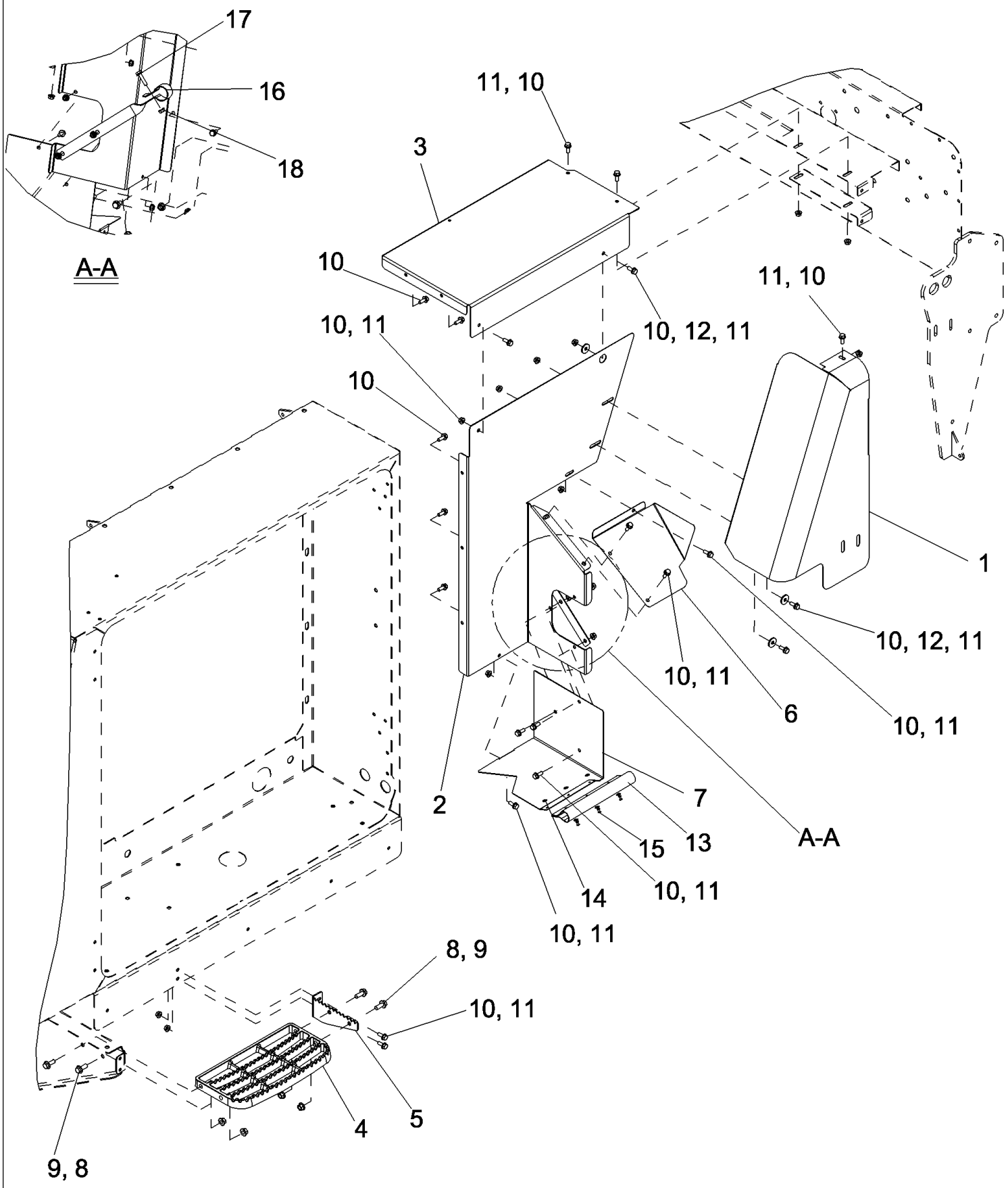

PDF created with pdfFactory trial version www.pdffactory.com

7088 AXIAL-FLOW COMBINE (EU) (4/08-)

09H-03 BAFFLE ASSY, ENGINE COVER

ссылка	Номер детали	Кол-во	Описание
1	84136603	1	PANEL, Rear Grain Tank, Right Hand
2	84136608	1	BRACKET, Side
3	84136599	1	COVER, Engine Baffle
4	87301185	1	STEP,
5	87642448	1	SHEET ASSY., Step Bracket
6	87477249	1	COVER, Rear Grain Tank, Right Hand
7	87746060	1	BRACKET, Cooler Door Filler
8	86705429	4	BOLT,
9	86050279	4	NUT, M10 x 1.5, Flg, Cl 10,
10	87656137	21	BOLT, Hex Flg, M8 x 20, 10.9, Full Thd,
11	86507066	16	NUT, M8 x 1.25, Flg, Cl 10,
12	87033737	2	WASHER, M8 x 28 x 3,
13	87746062	1	FOAM, Cooler Box Door
14	12642801	6	WASHER,
15	14642191	3	RIVET,
16	84129923	1	BRACKET, Cooler Baffle Brace
17	87695419	1	BOLT,
18	87681210	1	NUT, Hex, M8, Cl 10,

PDF created with pdfFactory trial version www.pdffactory.com

09H-04 HOOD, REAR

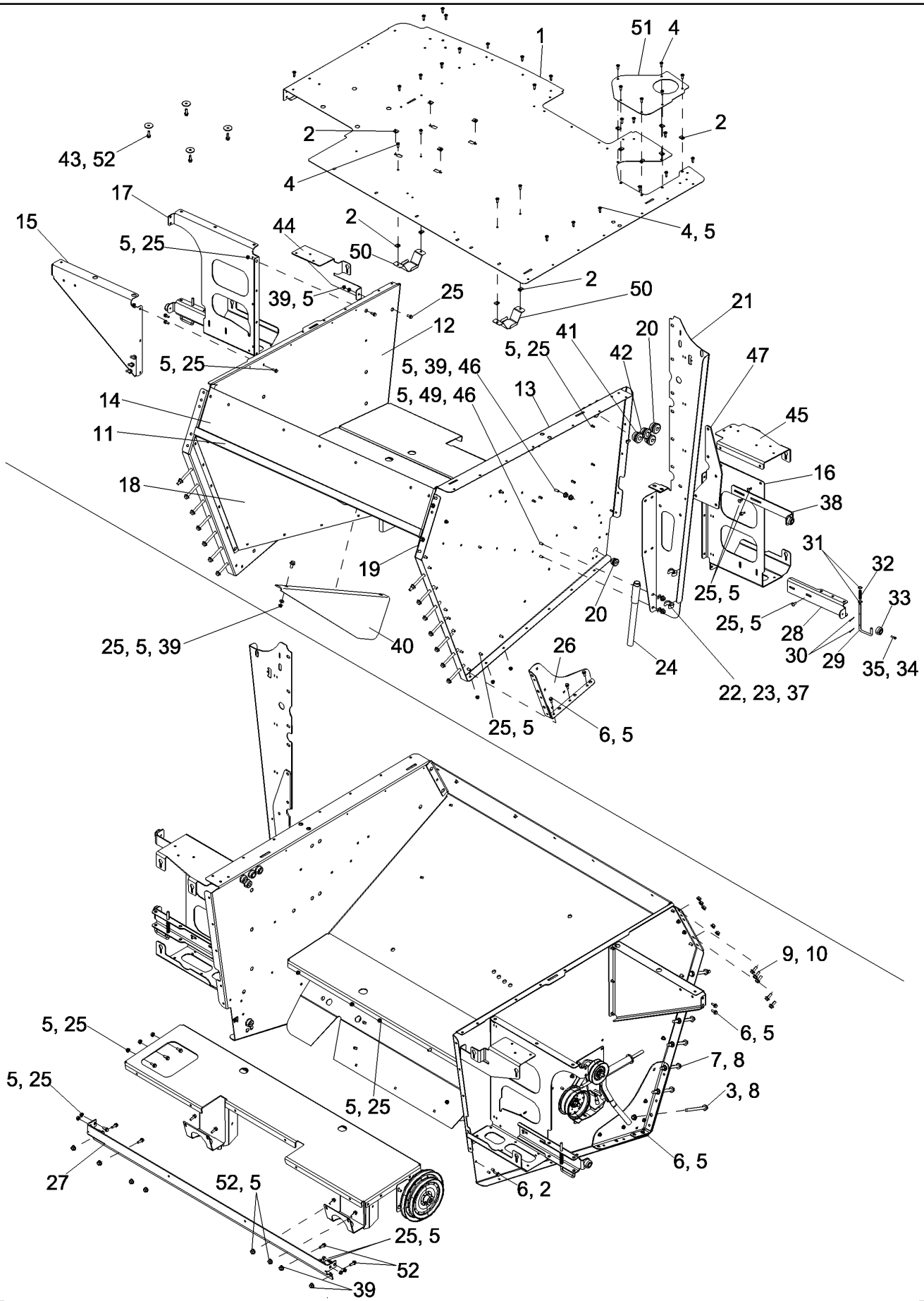

PDF created with pdfFactory trial version www.pdffactory.com

7088 AXIAL-FLOW COMBINE (EU) (4/08-)

09H-04 HOOD, REAR

ссылка	Номер детали	Кол-во	Описание
1	84125300	1	SHEET, Engine Service
2	86508354	16	NUT,
3	87742362	4	BOLT,
4	87624708	38	SCREW,
5	86507066	140	NUT, M8 x 1.25, Flg, Cl 10,
6	87656137	41	BOLT, Hex Flg, M8 x 20, 10.9, Full Thd,
7	87698848	14	BOLT,
8	86512497	16	NUT, M12 x 1.75, Flg, Cl 10,
9	87698836	10	BOLT,
10	86050279	10	NUT, M10 x 1.5, Flg, Cl 10,
11	87727299	1	FOAM,
12	87735822	1	SHEET ASSY., Rear Hood, Right Hand
13	87735820	1	SHEET ASSY., Rear Hood, Left Hand
14	84130486	1	SUPPORT ASSY., Fuel Tank
15	87678470	1	SUPPORT, Deck Rear Hood, Right Hand
16	87756390	1	BRACKET, Rear Hood, Left Hand
17	87756388	1	BRACKET, Rear Hood, Right Hand
18	87682344	1	DEFLECTOR, Deflector, Right Hand
19	87682346	1	DEFLECTOR, Deflector, Left Hand
20	198824C1	3	GROMMET,
21	87484734	1	SUPPORT, Unloader Saddle
22	106744A1	2	CLIP, Sieve Handle
23	44334	2	SCREW, Cross Pan Hd, M4 x 12,
24	106743A1	1	HANDLE, Extension Assembly
25	87682383	108	BOLT,
26	87602902	2	GUSSET, Corner, Reinforcement
27	87636063	1	SUPPORT, Rail, Rear Hood
28	87497819	2	BRACKET, Trim Support, Right and Left Hand
29	87728300	2	PIN, Panel Lock, Right and Left Hand
30	432-812	4	PIN, SPLIT (COTTER), 1/8" x 3/4", Panel Lock Pin, Right and Left Hand
31	495-11041	4	WASHER, 3/8", SAE,
32	192216A1	2	SPRING, Safety Stand Rod, Right and Left Hand
33	87602893	3	BUMPER, Recessed With Washer, Right and Left Hand
34	86977786	3	BOLT, Hex, M6 x 25, 8.8,
35	9804276	3	NUT, M6 x 1, Flg, Cl 8,
36	87698833	12	BOLT,
37	87301238	2	NUT,
38	87651938	1	SUPPORT, Bumper, Rear Left Hand Door
39	131-440	13	NUT,
40	115497A1	1	DEFLECTOR, Rotor Discharge
41	87107420	1	GROMMET,

PDF created with pdfFactory trial version www.pdffactory.com

ссылка	Номер детали	Кол-во	Описание
42	86976974	1	GROMMET,
43	495-81122	4	WASHER, .344" x 1 1/2" x .120",
44	87756392	1	BRACKET, Right Hand Corner Panel
45	87756386	1	BRACKET, Left Hand Corner Panel
46	87682384	3	BOLT,
47	87484624	1	PLATE, Saddle Support
48	87343550	2	BOLT,
49	496-81010	1	WASHER,
50	87599485	2	BRACKET, Fuel Tank Hold Down
51	87678478	1	COVER, Fuel Tank Spout

PDF created with pdfFactory trial version www.pdffactory.com

7088 AXIAL-FLOW COMBINE (EU) (4/08-)

09H-05 SIDE ASSEMBLY, SEPARATOR, LEFT HAND

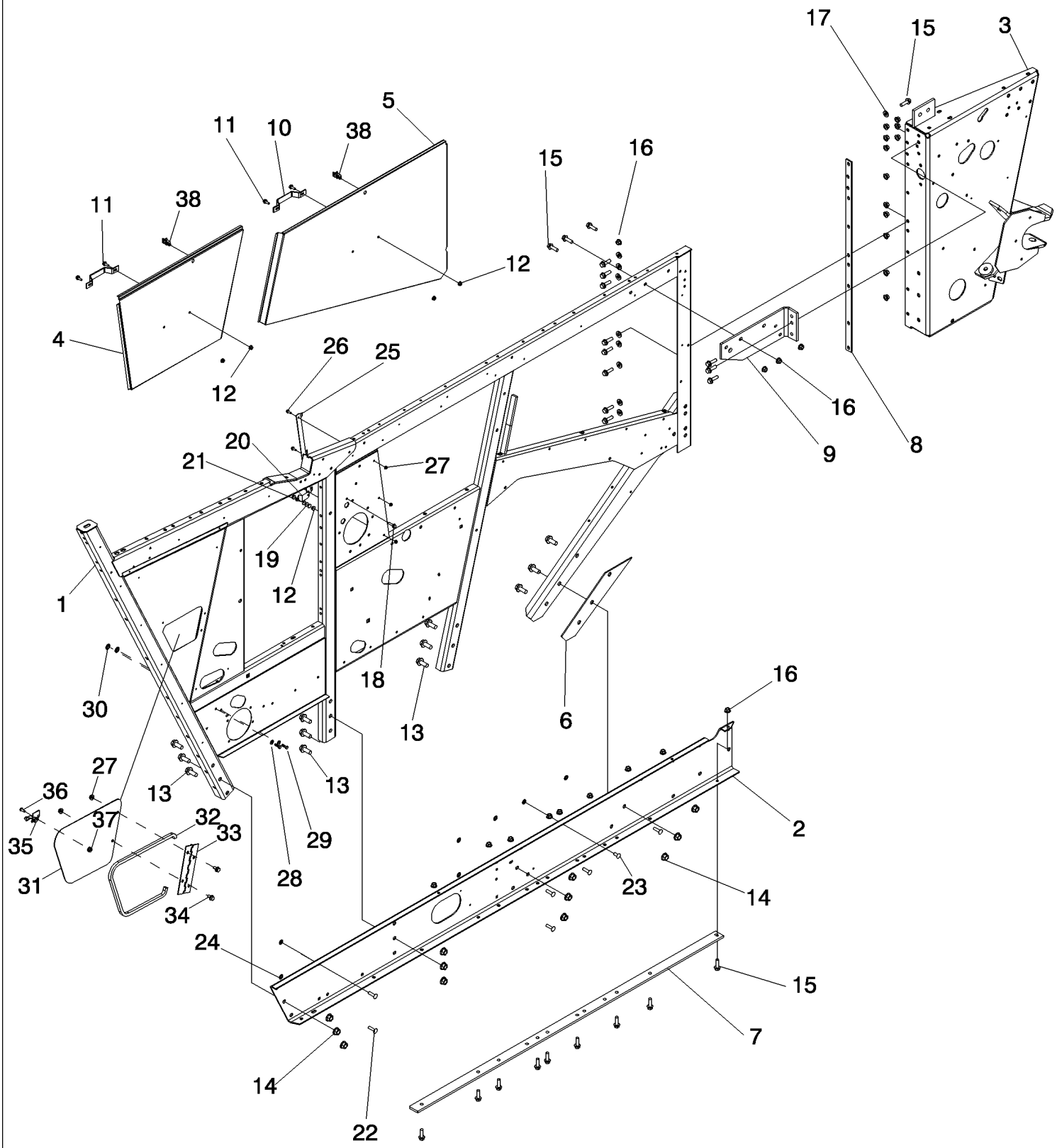

PDF created with pdfFactory trial version www.pdffactory.com

7088 AXIAL-FLOW COMBINE (EU) (4/08-)

09H-05 SIDE ASSEMBLY, SEPARATOR, LEFT HAND

ссылка	Номер детали	Кол-во	Описание
1	84126418	1	SEPARATOR, Side, Left Hand
2	87499100	1	BRACKET, Left Hand Main
3	87499649	1	POST, Front Left
4	87745630	1	SEPARATOR, Door, Left Hand
5	87745644	1	DOOR, Front Left
6	87357472	1	PLATE, Spacer
7	87545055	1	STRAP, Main Sill Flange
8	87478648	1	STRAP, Front Post
9	87701707	1	PLATE ASSY., Post To Separator
10	87735697	2	LATCH, Door
11	87656137	4	BOLT, Hex Flg, M8 x 20, 10.9, Full Thd,
12	86507066	5	NUT, M8 x 1.25, Flg, Cl 10,
13	86978772	12	BOLT,
14	86512498	12	NUT, M16 x 2, Flg, Cl 10,
15	87695413	25	BOLT,
16	86512497	25	NUT, M12 x 1.75, Flg, Cl 10,
17	86625256	10	WASHER, M12 x 28.5 x 4, HT,
18	87030775	1	BOLT, Hex Flg, M8 x 30, 10.9, Full Thd,
19	495-11034	3	WASHER, 5/16", SAE,
20	431114A1	1	BRACKET, Cleanout Access Door
21	86981466	1	NUT, LOCK, M8 x 1.25, Flg, Cl 10,
22	87682394	6	BOLT,
23	87682391	1	BOLT, Short NK, M10 x 25, Cl 10.9,
24	131-415	7	NUT, LOCK, Push, Bolt Retainer, 3/8" x 25/32",
25	87745036	1	BRACKET, Access Panel Hold
26	87695418	3	BOLT,
27	86050300	4	NUT, M6 x 1, Flg, Cl10,
28	495-81024	2	WASHER, 17/32" x 1 1/4" x .060",
29	87682383	2	BOLT,
30	131-440	2	NUT,
31	87384924	1	DOOR, Separator Rear, Left Hand
32	87388259	1	SEAL, Rear Separator Left Hand Door
33	397586A1	1	HINGE, Rear Separator Left Hand Door
34	87698753	4	BOLT,
35	167800C1	1	FASTENER, Door Retainer
36	86511920	1	SCREW, Cross Pan Hd, #10-24 x 1/2",
37	523310	1	NUT,
38	87472948	2	LATCH, Rotor Access Panel

PDF created with pdfFactory trial version www.pdffactory.com

7088 AXIAL-FLOW COMBINE (EU) (4/08-)

09H-06 SIDE ASSEMBLY, SEPARATOR, RIGHT HAND

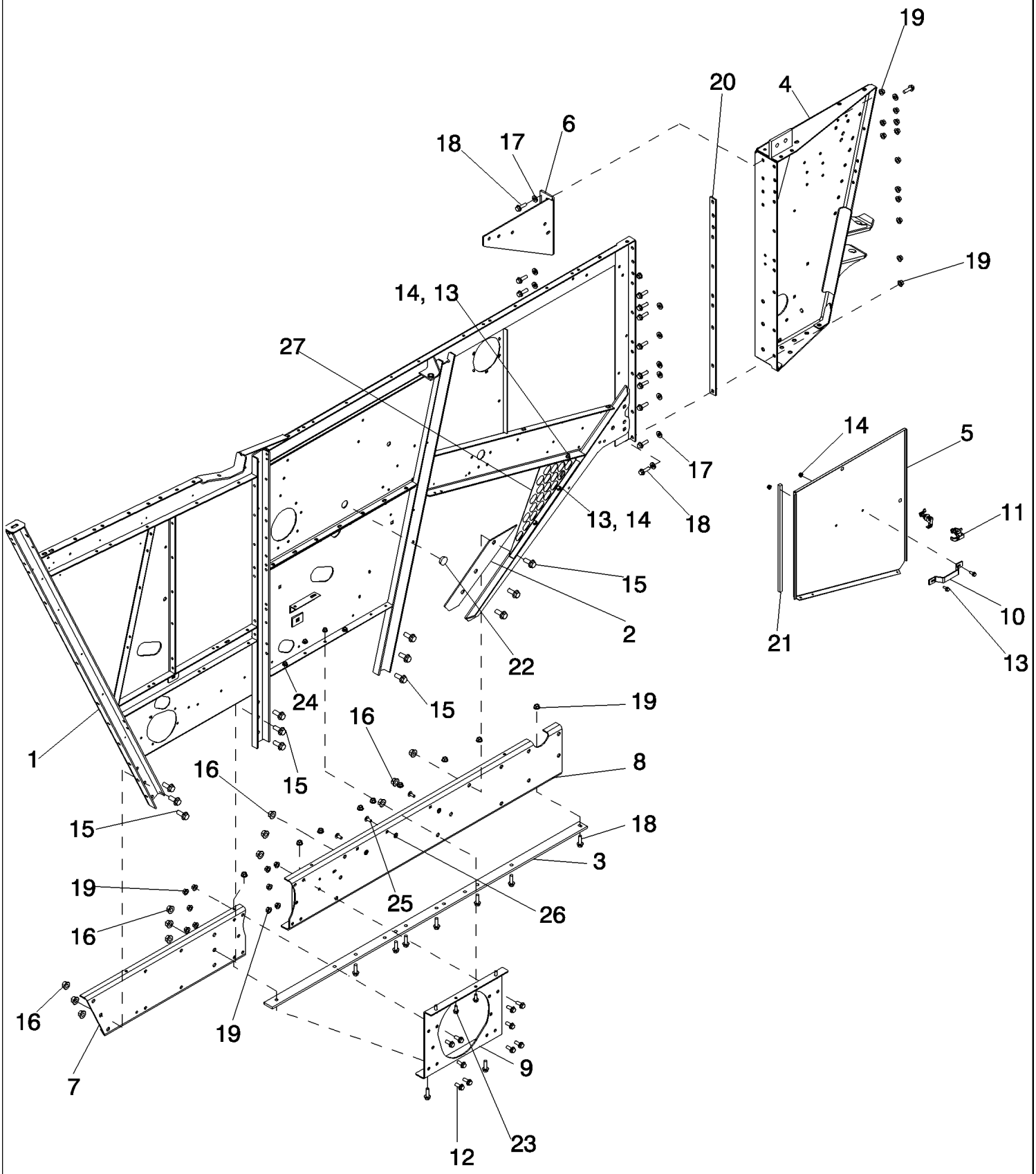

PDF created with pdfFactory trial version www.pdffactory.com

7088 AXIAL-FLOW COMBINE (EU) (4/08-)

09H-06 SIDE ASSEMBLY, SEPARATOR, RIGHT HAND

ссылка	Номер детали	Кол-во	Описание
1	84126420	1	SEPARATOR, Side, Right Hand
2	87357472	1	PLATE, Spacer
3	87545055	1	STRAP, Main Sill Flange
4	87499651	1	POST, Front Right Hand
5	87388469	1	DOOR ASSY., Right Front
6	84126991	1	BRACKET, Front Post To Side Sheet
7	87750267	1	BRACKET, Rear Main, Right Hand
8	87499098	1	BRACKET, Main, Right Hand
9	87679652	1	BRACKET, Right Hand Sill
10	87735697	1	LATCH, Door
11	86991204	2	LATCH, Rotor Access Door
12	87030508	10	BOLT, Hex Flg, M12 x 30, 10.9, Full Thd,
13	87656137	5	BOLT, Hex Flg, M8 x 20, 10.9, Full Thd,
14	86507066	5	NUT, M8 x 1.25, Flg, Cl 10,
15	86978772	12	BOLT,
16	86512498	12	NUT, M16 x 2, Flg, Cl 10,
17	86625256	11	WASHER, M12 x 28.5 x 4, HT,
18	87695413	22	BOLT,
19	86512497	32	NUT, M12 x 1.75, Flg, Cl 10,
20	87478648	1	STRAP, Front Post
21	86991662	1	SEAL,
22	353-414	1	PLUG, Dome, 1.375" hole, Nylon,
23	87698836	4	BOLT,
24	86050279	4	NUT, M10 x 1.5, Flg, Cl 10,
25	87682391	3	BOLT, Short NK, M10 x 25, Cl 10.9,
26	131-415	3	NUT, LOCK, Push, Bolt Retainer, 3/8" x 25/32",
27	87473326	1	SHIELD, SPLASH, Cleaning, Right Hand

PDF created with pdfFactory trial version www.pdffactory.com

09H-07 CROSS SUPPORTS, SEPARATOR

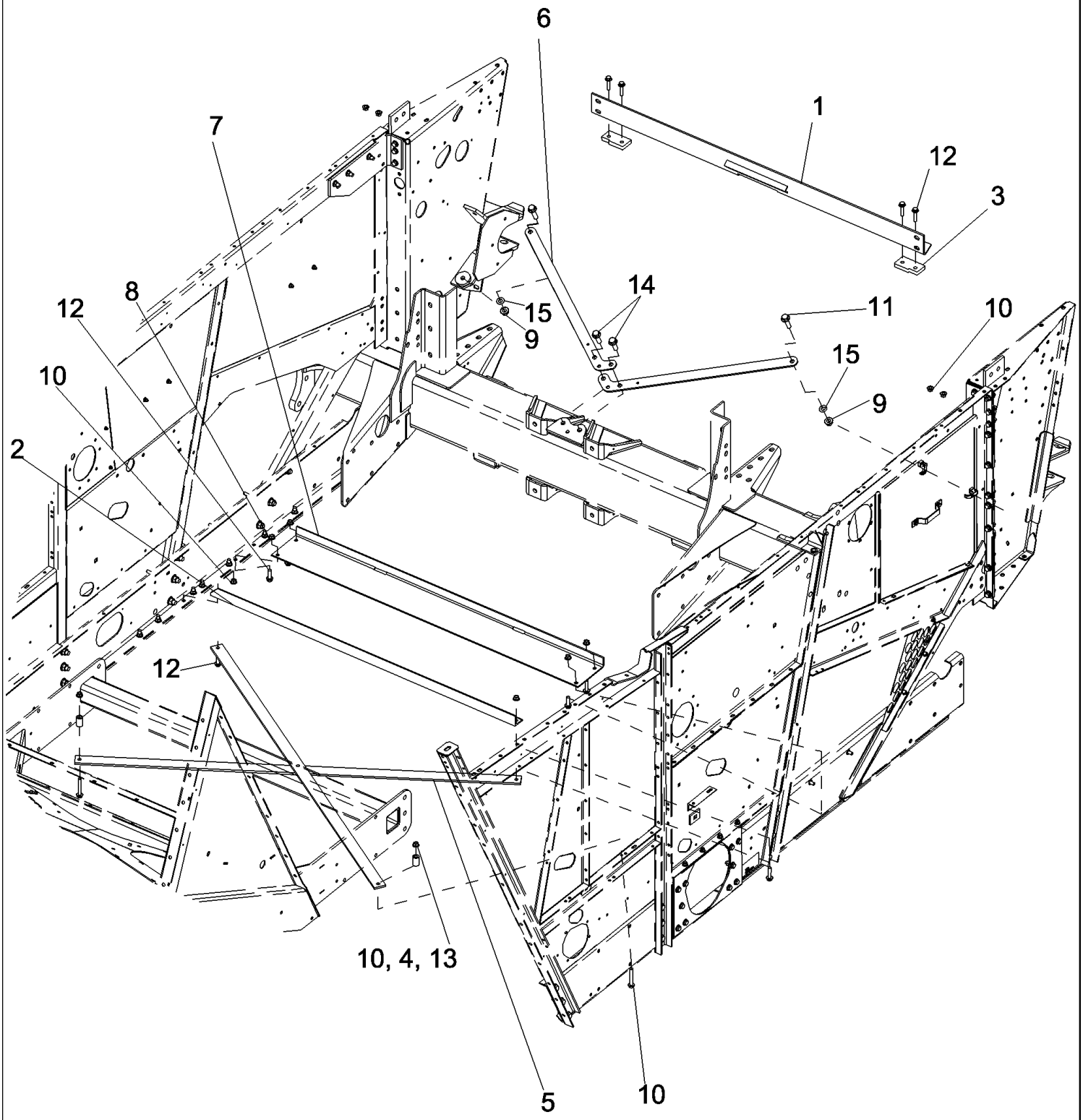

PDF created with pdfFactory trial version www.pdffactory.com

7088 AXIAL-FLOW COMBINE (EU) (4/08-)

09H-07 CROSS SUPPORTS, SEPARATOR

ссылка	Номер детали	Кол-во	Описание
1	87701168	1	SUPPORT ASSY., Front Post
2	87701106	1	ANGLE, Main Sill Center
3	87649381	2	SPACER, Front Post Top
4	87580180	2	BUSHING, LARGE, Frame X Brace
5	87578073	2	STRAP,
6	87499095	2	STRAP, SECURING, Axle To Feeder Pivot
7	87382748	1	BRACE, Sill Brace
8	87695413	2	BOLT,
9	86512498	2	NUT, M16 x 2, Flg, Cl 10,
10	86512497	12	NUT, M12 x 1.75, Flg, Cl 10,
11	87675533	2	BOLT,
12	87670764	8	BOLT,
13	87698846	2	BOLT,
14	87698849	2	BOLT,
15	87317689	2	WASHER,

PDF created with pdfFactory trial version www.pdffactory.com

09H-08 SEPARATOR TOP SHEET ASSEMBLY

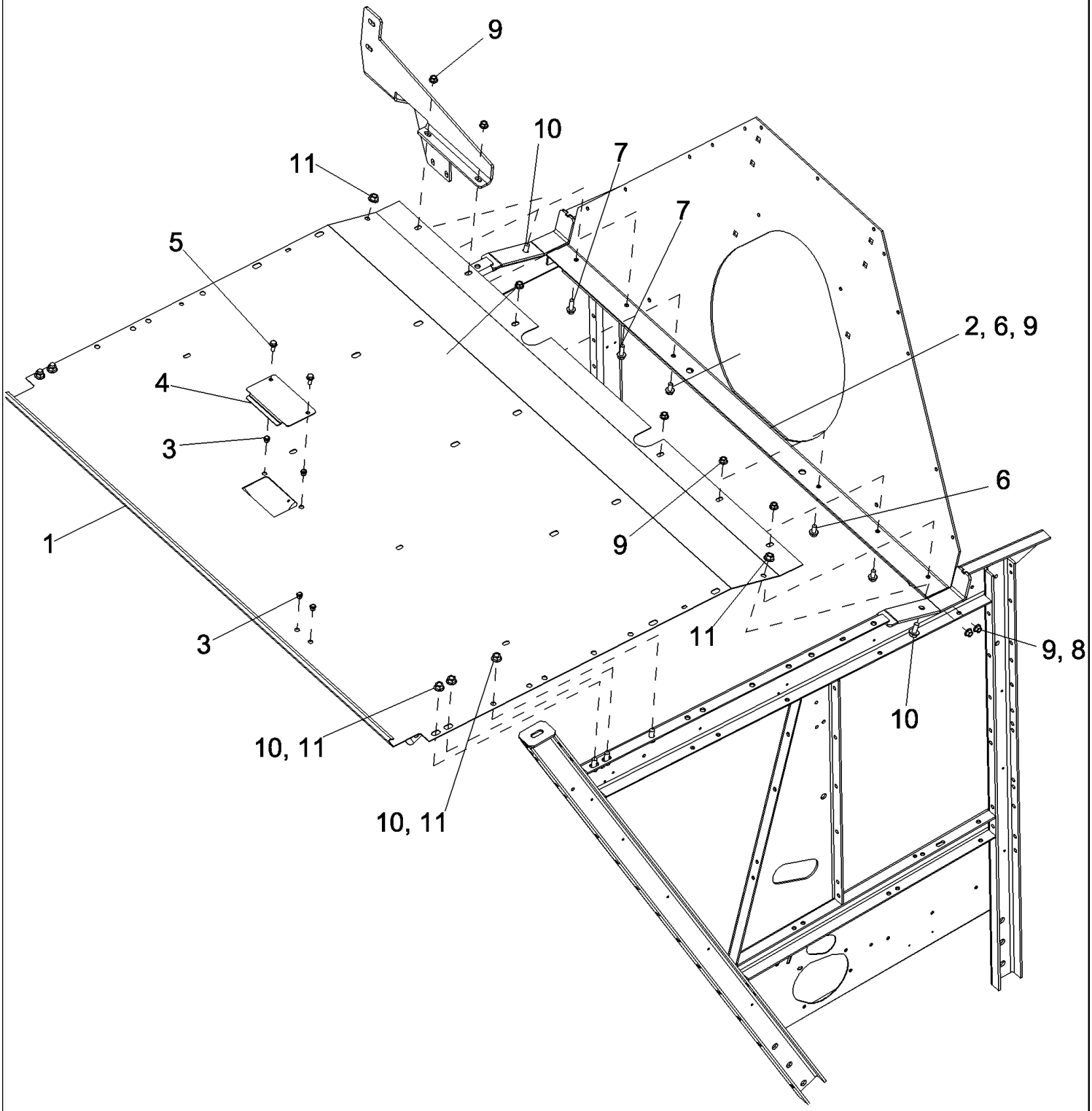

PDF created with pdfFactory trial version www.pdffactory.com

7088 AXIAL-FLOW COMBINE (EU) (4/08-)

09H-08 SEPARATOR TOP SHEET ASSEMBLY

ссылка	Номер детали	Кол-во	Описание
1	84126974	1	SHEET ASSY., Engine Deck
2	87757151	1	ANGLE, Engine Deck Support, Front
3	87284531	4	NUT,
4	87572905	1	COVER, Oil Drain Valve Access
5	87656137	2	BOLT, Hex Flg, M8 x 20, 10.9, Full Thd,
6	87698835	11	BOLT,
7	87698837	2	BOLT,
8	87698836	4	BOLT,
9	86050279	17	NUT, M10 x 1.5, Flg, Cl 10,
10	87343550	7	BOLT,
11	86512497	7	NUT, M12 x 1.75, Flg, Cl 10,

PDF created with pdfFactory trial version www.pdffactory.com

09H-09 VIEWING DOOR ASSEMBLY, LOWER SIEVE

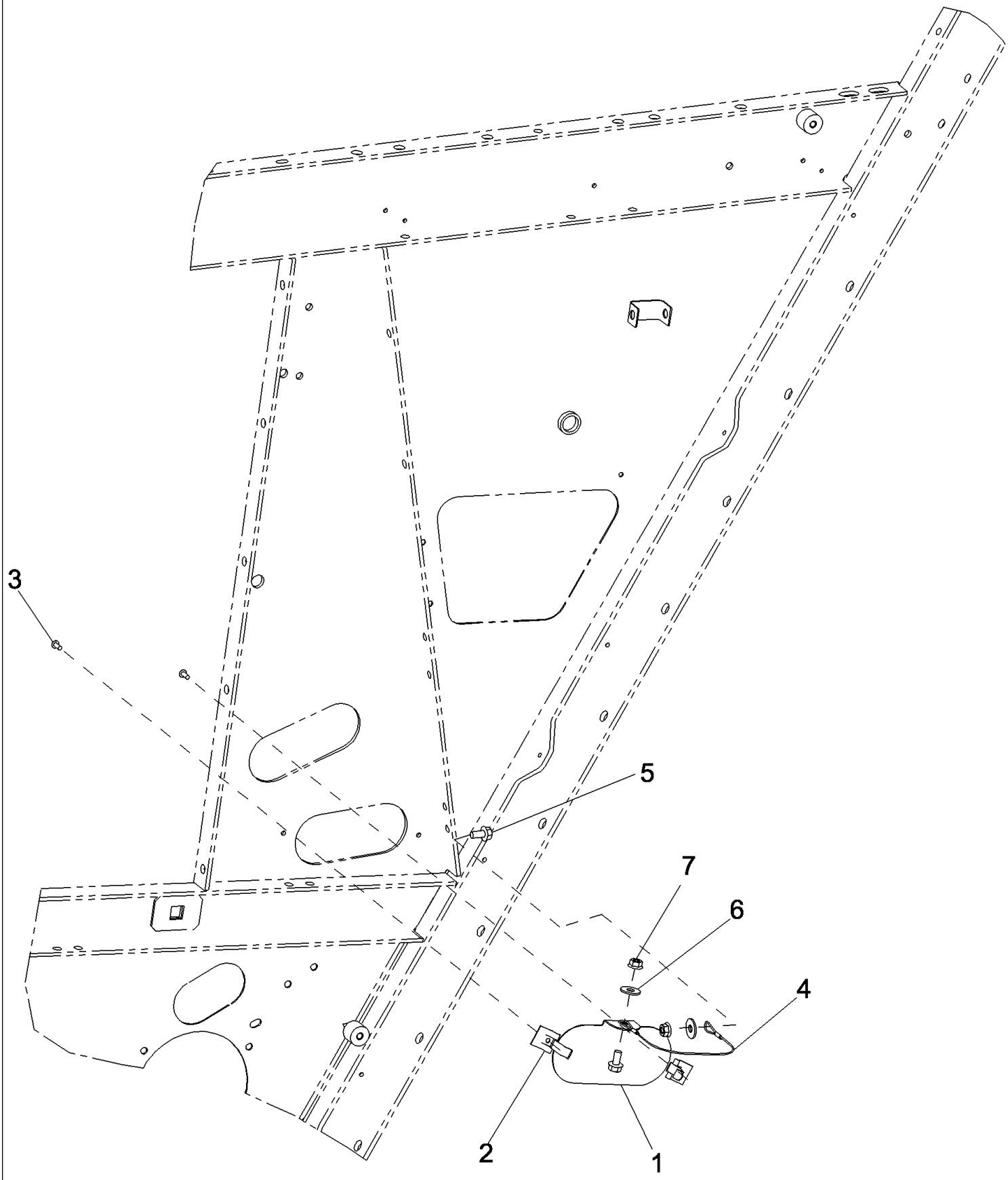

PDF created with pdfFactory trial version www.pdffactory.com

7088 AXIAL-FLOW COMBINE (EU) (4/08-)

09H-09 VIEWING DOOR ASSEMBLY, LOWER SIEVE

ссылка	Номер детали	Кол-во	Описание
1	87721681	1	DOOR ASSY., Lower Sieve
2	167800C1	2	FASTENER, Door Retainer
3	445394	2	RIVET, Pop, M4.8 x 12.7,
4	427336A1	1	CABLE,
5	87681207	2	BOLT,
6	86639313	2	WASHER, M8 x 20 x 1.6,
7	87681210	2	NUT, Hex, M8, Cl 10,

PDF created with pdfFactory trial version www.pdffactory.com

09H-10 DOOR - SHIELD - RIGHT HAND FRONT

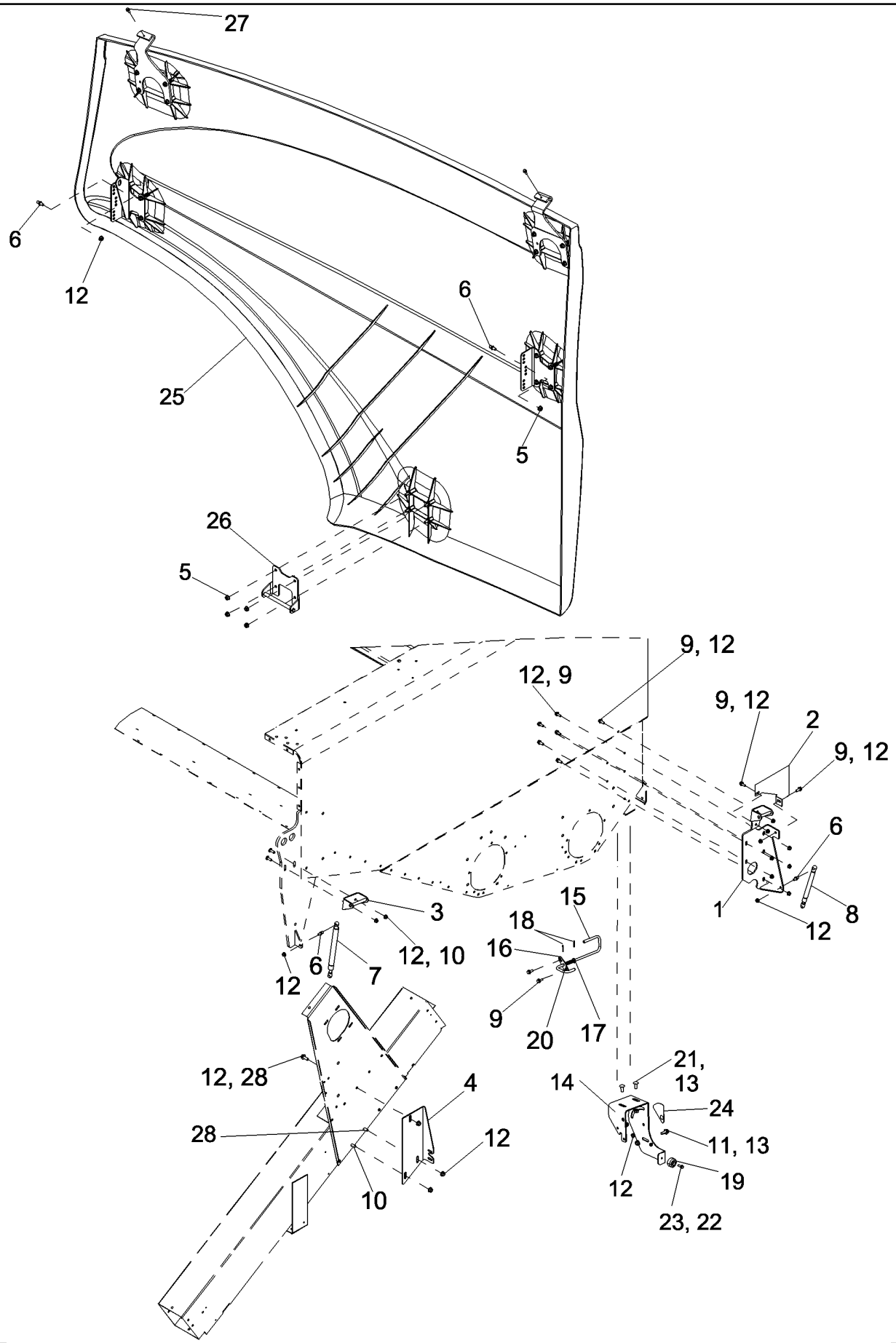

PDF created with pdfFactory trial version www.pdffactory.com

7088 AXIAL-FLOW COMBINE (EU) (4/08-)

09H-10 DOOR - SHIELD - RIGHT HAND FRONT

ссылка	Номер детали	Кол-во	Описание
1	87663834	1	BRACKET, Hinge, Right Hand Front
2	87666897	1	PLATE, Cover, Right Hand
3	87624895	1	BRACKET, Rear Hinge
4	87484220	1	BRACKET, Right Hand Front Latch
5	86619801	4	NUT, LOCK, M8 x 1.25, Flg, Cl 8,
6	86634307	4	STUD,
7	87757843	1	GAS STRUT, 700N
8	87688426	1	GAS STRUT, 250N
9	87656137	10	BOLT, Hex Flg, M8 x 20, 10.9, Full Thd,
10	87030775	1	BOLT, Hex Flg, M8 x 30, 10.9, Full Thd,
11	87698836	1	BOLT,
12	86507066	19	NUT, M8 x 1.25, Flg, Cl 10,
13	86050279	3	NUT, M10 x 1.5, Flg, Cl 10,
14	87680361	1	BRACKET, Transport Lock
15	87470711	1	ROD, Transport Lock Latch, Right Hand Front
16	87676999	1	BRACKET,
17	495-11041	2	WASHER, 3/8", SAE,
18	432-812	2	PIN, SPLIT (COTTER), 1/8" x 3/4",
19	87602893	1	BUMPER, Recessed With Washer Insert
20	192216A1	1	SPRING, Safety Stand Rod
21	87682391	2	BOLT, Short NK, M10 x 25, Cl 10.9,
22	86977786	1	BOLT, Hex, M6 x 25, 8.8,
23	9804276	1	NUT, M6 x 1, Flg, Cl 8,
24	87479418	1	DECAL, Trim Panel Lock, Right Hand
25	87751017	1	PANEL ASSY., Front Right Hand
26	87649465	1	BRACKET, Latch
27	86625199	2	SCREW, SELF TAPPING, Hex Flg Hd, M6 x 13,
28	87698833	2	BOLT,

PDF created with pdfFactory trial version www.pdffactory.com

09H-11 SUPPORT AND MOUNTING, RIGHT HAND REAR DOOR SHIELD

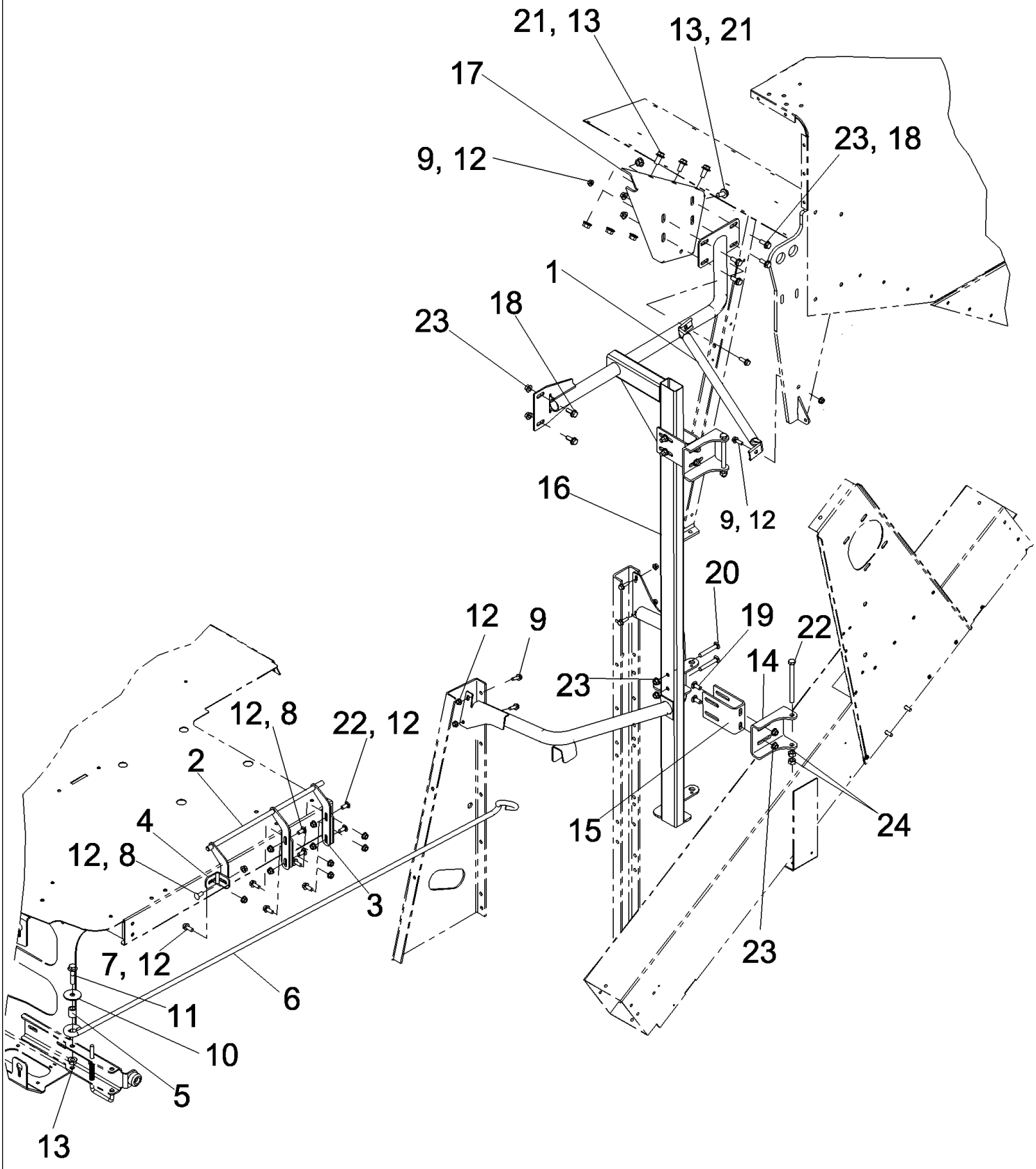

PDF created with pdfFactory trial version www.pdffactory.com

7088 AXIAL-FLOW COMBINE (EU) (4/08-)

09H-11 SUPPORT AND MOUNTING, RIGHT HAND REAR DOOR SHIELD

ссылка	Номер детали	Кол-во	Описание
1	87680949	1	SUPPORT,
2	87709512	1	BRACKET, Right Hand Rear Panel
3	87709508	2	BRACKET, Right Hand Rear Panel, Latch Mounting
4	87709506	1	BRACKET, Right Hand Rear Panel, Latch Mounting
5	224368A1	1	SPACER, Door Keeper Rod
6	87654944	1	ROD, Right Hand Rear Door Keeper
7	87656137	5	BOLT, Hex Flg, M8 x 20, 10.9, Full Thd,
8	87682383	3	BOLT,
9	87698833	6	BOLT,
10	87026355	1	WASHER, M12 x 50 x 3, HT,
11	87670764	1	BOLT,
12	86507066	16	NUT, M8 x 1.25, Flg, Cl 10,
13	86512497	6	NUT, M12 x 1.75, Flg, Cl 10,
14	87703740	2	BRACKET, Right Hand Rear Door Hinge
15	87629500	2	BRACKET, Right Hand Rear Hinge
16	84127288	1	BRACKET, Right Hand Rear Trim Panel
17	87756424	1	BRACKET, Hinge Support, Front
18	87698836	6	BOLT,
19	87682391	4	BOLT, Short NK, M10 x 25, Cl 10.9,
20	87752069	4	BOLT, CARRIAGE,
21	87343550	5	BOLT,
22	328048	2	BOLT, Hex, M12 x 140, 8.8,
23	86050279	14	NUT, M10 x 1.5, Flg, Cl 10,
24	9706685	4	NUT, M12, Cl 8,

PDF created with pdfFactory trial version www.pdffactory.com

7088 AXIAL-FLOW COMBINE (EU) (4/08-)

09H-12 DOOR - SHIELD - RIGHT HAND REAR

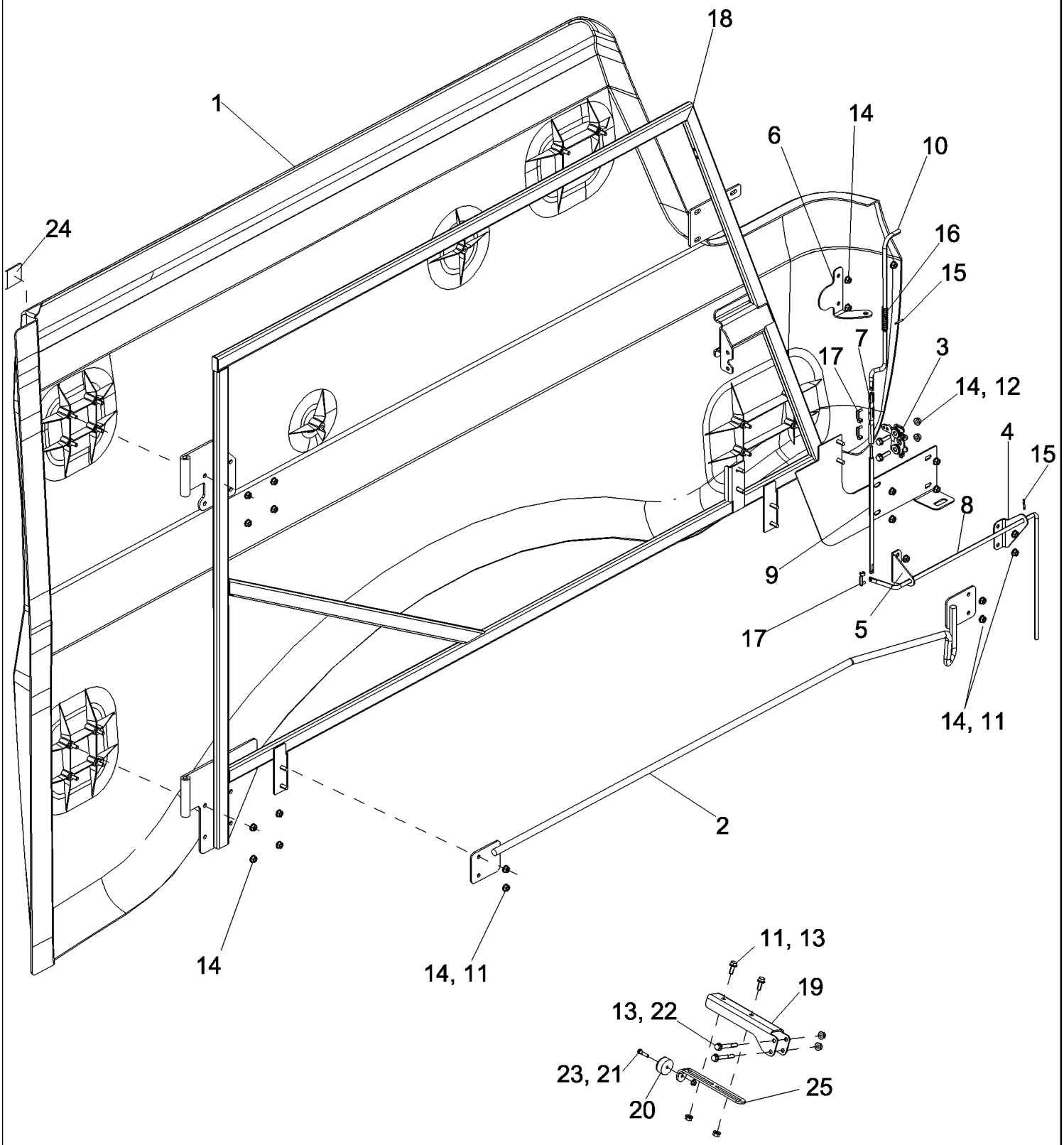

PDF created with pdfFactory trial version www.pdffactory.com

7088 AXIAL-FLOW COMBINE (EU) (4/08-)

09H-12 DOOR - SHIELD - RIGHT HAND REAR

ссылка	Номер детали	Кол-во	Описание
1	87620367	1	PLASTIC, Rear, Right Hand
2	87707244	1	GUIDE, Right Hand Rear Panel
3	87695332	1	LATCH ASSY.,
4	87707025	1	BRACKET, Rear Panel Latch
5	87706352	1	BRACKET, Rear Panel Latch
6	84134668	1	BRACKET, Rear Panel Latch
7	87282456	1	CLEVIS, Dual Latch
8	87706351	1	ROD, Right Hand Rear Door Latch
9	87706354	1	ROD, Right Hand Rear Door Upper Latch Linkage
10	87755442	1	ROD, Door Latch, Right Hand, Rear
11	87656137	10	BOLT, Hex Flg, M8 x 20, 10.9, Full Thd,
12	87030775	2	BOLT, Hex Flg, M8 x 30, 10.9, Full Thd,
13	86507066	4	NUT, M8 x 1.25, Flg, Cl 10,
14	86619801	25	NUT, LOCK, M8 x 1.25, Flg, Cl 8,
15	438-1816	3	PIN, LOCK, 1/8" x 2", Slotted,
16	87426044	1	SPRING,
17	87282455	3	PIN, LOCK,
18	84140983	1	BRACKET, Door, Right Hand, Rear
19	87485146	1	BRACKET, Right Hand Rear Panel Bumper
20	87602893	1	BUMPER, Recessed With Washer Insert
21	86977786	1	BOLT, Hex, M6 x 25, 8.8,
22	87670761	2	BOLT,
23	9804276	1	NUT, M6 x 1, Flg, Cl 8,
24	86984222	2	PAD, Adhesive Back
25	87485148	1	BRACKET, Right Hand Rear Panel Bumper

PDF created with pdfFactory trial version www.pdffactory.com

7088 AXIAL-FLOW COMBINE (EU) (4/08-)

09H-13 DOOR - SHIELDS - LEFT HAND

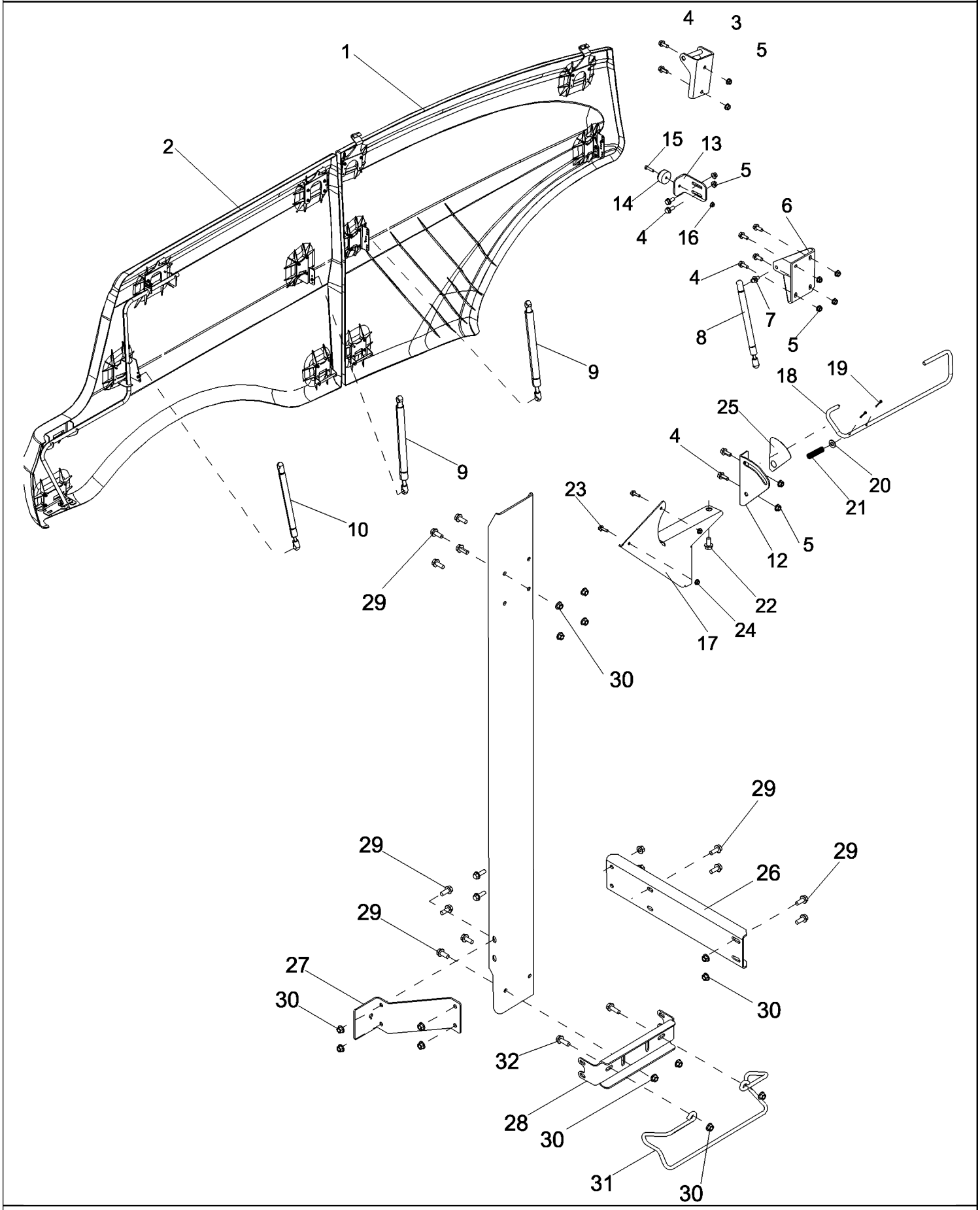

PDF created with pdfFactory trial version www.pdffactory.com

7088 AXIAL-FLOW COMBINE (EU) (4/08-)

09H-13 DOOR - SHIELDS - LEFT HAND

ссылка	Номер детали	Кол-во	Описание
1	NSS	1	NOT SERVICED SEPARATELY, TRIM PANEL, Front, Left Hand Side, See Figure 09H-14
2	NSS	1	NOT SERVICED SEPARATELY, TRIM PANEL, Rear, Left Hand Side, See Figure 09H-15
3	87663840	1	BRACKET, Hinge, Left Hand Front
4	87656137	10	BOLT, Hex Flg, M8 x 20, 10.9, Full Thd,
5	86507066	11	NUT, M8 x 1.25, Flg, Cl 10,
6	87663897	1	BRACKET, Gas Spring, Left Hand
7	86634307	1	STUD,
8	87688426	1	GAS STRUT, 250N
9	87757843	2	GAS STRUT, 700N
10	87690981	1	GAS STRUT, 500N
11	87757247	1	SHEET ASSY., Rear,Left Hand
12	87700648	1	BRACKET, Latch
13	87671843	1	BRACKET,
14	87602893	1	BUMPER, Recessed With Washer Insert
15	86977786	1	BOLT, Hex, M6 x 25, 8.8,
16	9804276	1	NUT, M6 x 1, Flg, Cl 8,
17	84126909	1	BRACKET, Left Hand Front Transport Lock
18	87470712	1	ROD, Left Hand Front Transport Lock Latch
19	432-812	2	PIN, SPLIT (COTTER), 1/8" x 3/4",
20	495-11041	1	WASHER, 3/8", SAE,
21	192216A1	1	SPRING, Safety Stand Rod
22	87698835	1	BOLT,
23	87675531	2	BOLT,
24	86050300	2	NUT, M6 x 1, Flg, Cl10,
25	87479419	1	DECAL, Trim Panel Lock, Left Hand
26	87757210	1	SHEET ASSY., Side, Rear, Left Hand
27	87757249	1	SUPPORT,
28	84136668	1	BRACKET, Left Hand Trim Panels Latch
29	87698836	14	BOLT,
30	86050279	16	NUT, M10 x 1.5, Flg, Cl 10,
31	84149018	1	LATCH, Latch Guard
32	87698837	2	BOLT,

PDF created with pdfFactory trial version www.pdffactory.com

09H-14 PANEL, TRIM, LEFT HAND FRONT

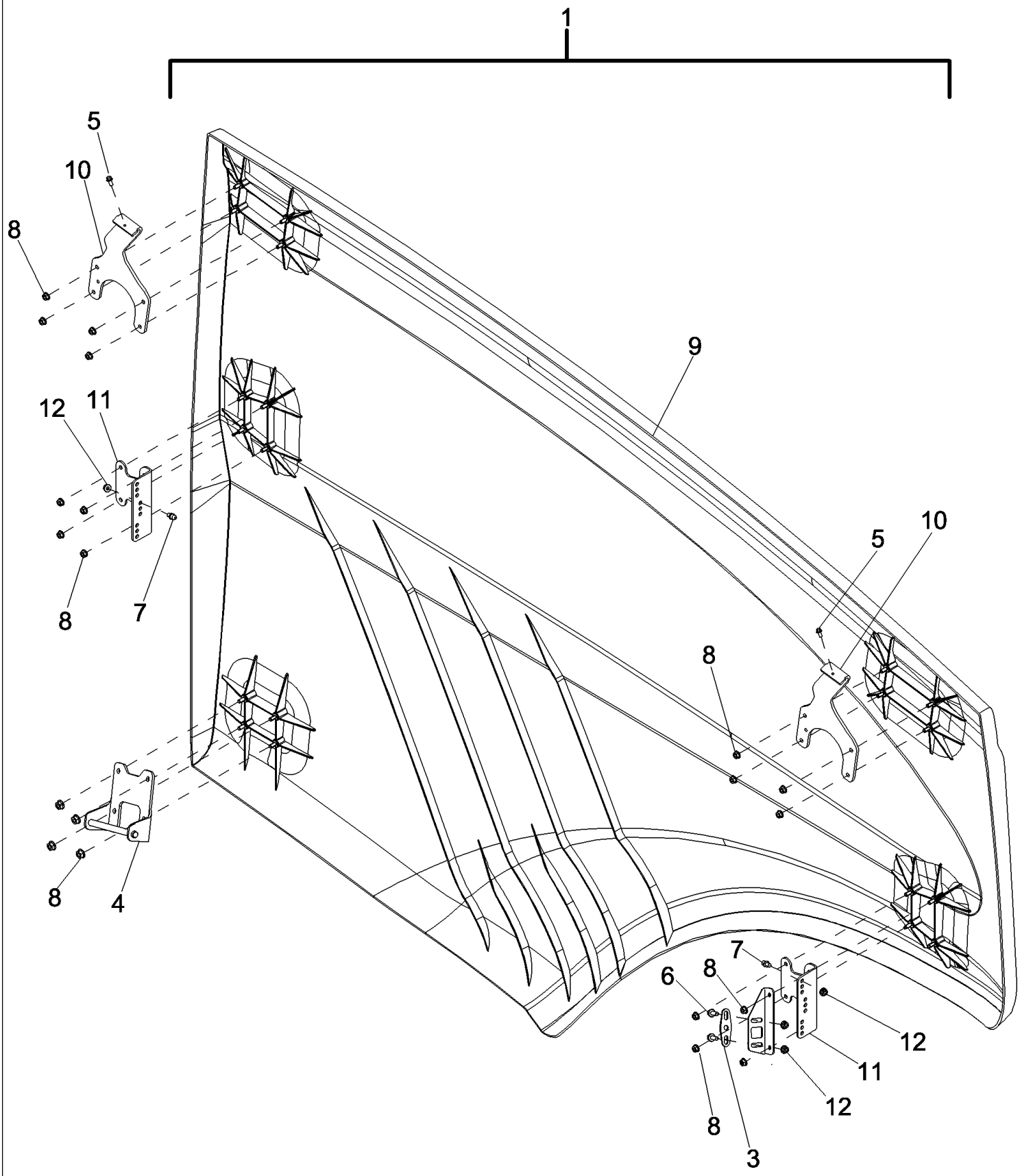

PDF created with pdfFactory trial version www.pdffactory.com

7088 AXIAL-FLOW COMBINE (EU) (4/08-)

09H-14 PANEL, TRIM, LEFT HAND FRONT

ссылка	Номер детали	Кол-во	Описание
1	87751015	1	PANEL ASSY., Inc. 8 Qty of 14 and 9 - 11
2	87699517	1	BRACKET, Lock
3	87676999	1	BRACKET,
4	87649465	1	BRACKET, Latch
5	86625199	2	SCREW, SELF TAPPING, Hex Flg Hd, M6 x 13,
6	87656137	2	BOLT, Hex Flg, M8 x 20, 10.9, Full Thd,
7	86634307	2	STUD,
8	86619801	20	NUT, LOCK, M8 x 1.25, Flg, Cl 8,
9	87612690	1	PLASTIC, Front, Left Hand
10	87633973	2	BRACKET, Hinge
11	87661467	2	BRACKET, Gas Spring
12	86507066	4	NUT, M8 x 1.25, Flg, Cl 10,

PDF created with pdfFactory trial version www.pdffactory.com

09H-15 PANEL, TRIM, LEFT HAND REAR

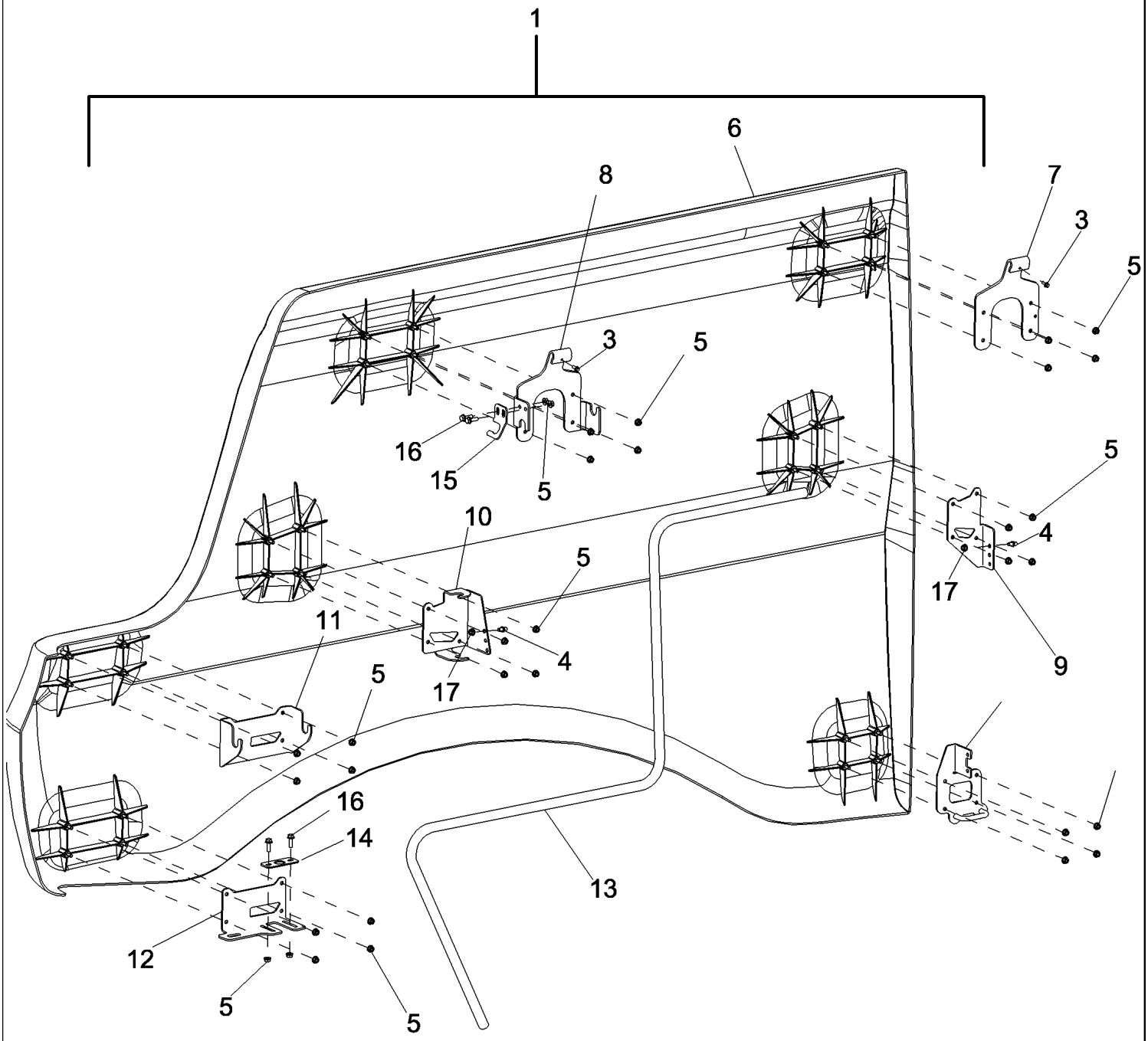

PDF created with pdfFactory trial version www.pdffactory.com

7088 AXIAL-FLOW COMBINE (EU) (4/08-)

09H-15 PANEL, TRIM, LEFT HAND REAR

ссылка	Номер детали	Кол-во	Описание
1	87751018	1	PANEL ASSY., Inc. 5 Qty of 28 and 6 - 16
2	87649465	1	BRACKET, Latch
3	86625199	2	SCREW, SELF TAPPING, Hex Flg Hd, M6 x 13,
4	86634307	2	STUD,
5	86619801	32	NUT, LOCK, M8 x 1.25, Flg, Cl 8,
6	87614445	1	PLASTIC, Left Hand Rear
7	87654736	1	BRACKET, Hinge, Left Hand
8	87470677	1	BRACKET, Hinge, Left Hand
9	87661469	1	BRACKET, Gas Spring
10	87470680	1	BRACKET, Gas Spring Mount
11	87470683	1	BRACKET, Rear Door, Left Hand
12	87649312	1	BRACKET, Rear Door, Left Hand
13	87654332	1	BRACKET, Left Hand Rear Door, Stiffener
14	87649314	1	BRACKET, Left Hand Rear Door, Stiffener Adjust
15	87661473	1	BRACKET, Tube Retainer
16	87698833	4	BOLT,
17	86507066	2	NUT, M8 x 1.25, Flg, Cl 10,

PDF created with pdfFactory trial version www.pdffactory.com

09H-16 LATCH ASSEMBLY, TRIM PANELS

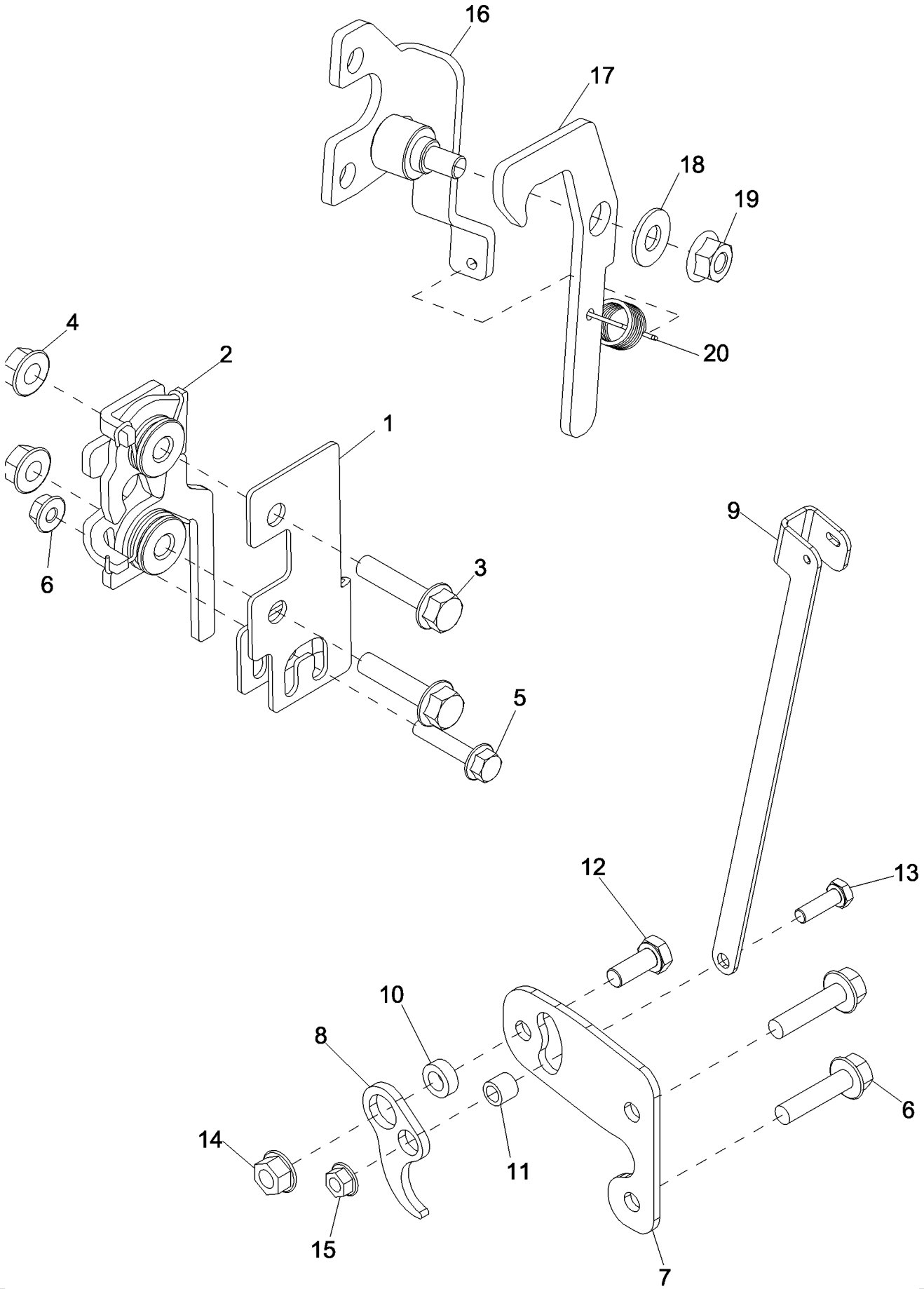

PDF created with pdfFactory trial version www.pdffactory.com

7088 AXIAL-FLOW COMBINE (EU) (4/08-)

09H-16 LATCH ASSEMBLY, TRIM PANELS

ссылка	Номер детали	Кол-во	Описание
1	87483906	3	COVER, Primary Trim Panel Latch
2	87688487	3	LATCH ASSY., Primary, Trim Panel
3	87695419	8	BOLT, Trim Panel Latch
4	86507066	6	NUT, M8 x 1.25, Flg, Cl 10, Primary Trim Panel Latch
5	87698760	3	BOLT, Primary Trim Panel Latch
6	87301498	3	NUT, Primary Trim Panel Latch
7	84161978	1	PLATE, Right Hand Rear Panel, Secondary Latch Mounting
8	84161984	1	LATCH, Right Hand Rear Panel, Secondary
9	84161981	1	STRAP, Right Hand Rear Panel, Secondary Latch
10	224089A1	1	SPACER, Right Hand Rear Panel, Secondary Latch
11	87682401	1	SPACER, Right Hand Rear Panel, Secondary Latch
12	120104	1	BOLT, Hex, M8 x 20, 8.8, Right Hand Rear Panel, Secondary Latch
13	120100	1	BOLT, Hex, M6 x 20, 8.8, Right Hand Rear Panel, Secondary Latch
14	9804277	1	NUT, M8 x 1.25, Flg, Cl 8, Right Hand Rear Panel, Secondary Latch
15	9804276	1	NUT, M6 x 1, Flg, Cl 8, Right Hand Rear Panel, Secondary Latch
16	84162649	1	BRACKET, Right Hand Latch
16	84162647	2	BRACKET, Left Hand Latch
17	84168972	3	LATCH, Secondary
18	86625263	3	WASHER, M8 x 20 x 1.6, Secondary Latch
19	86619801	3	NUT, LOCK, M8 x 1.25, Flg, Cl 8, Secondary Latch
20	87283313	3	SPRING, Spreader Lock Handle, Secondary Latch

PDF created with pdfFactory trial version www.pdffactory.com

09H-17 TRIM PANELS, REAR

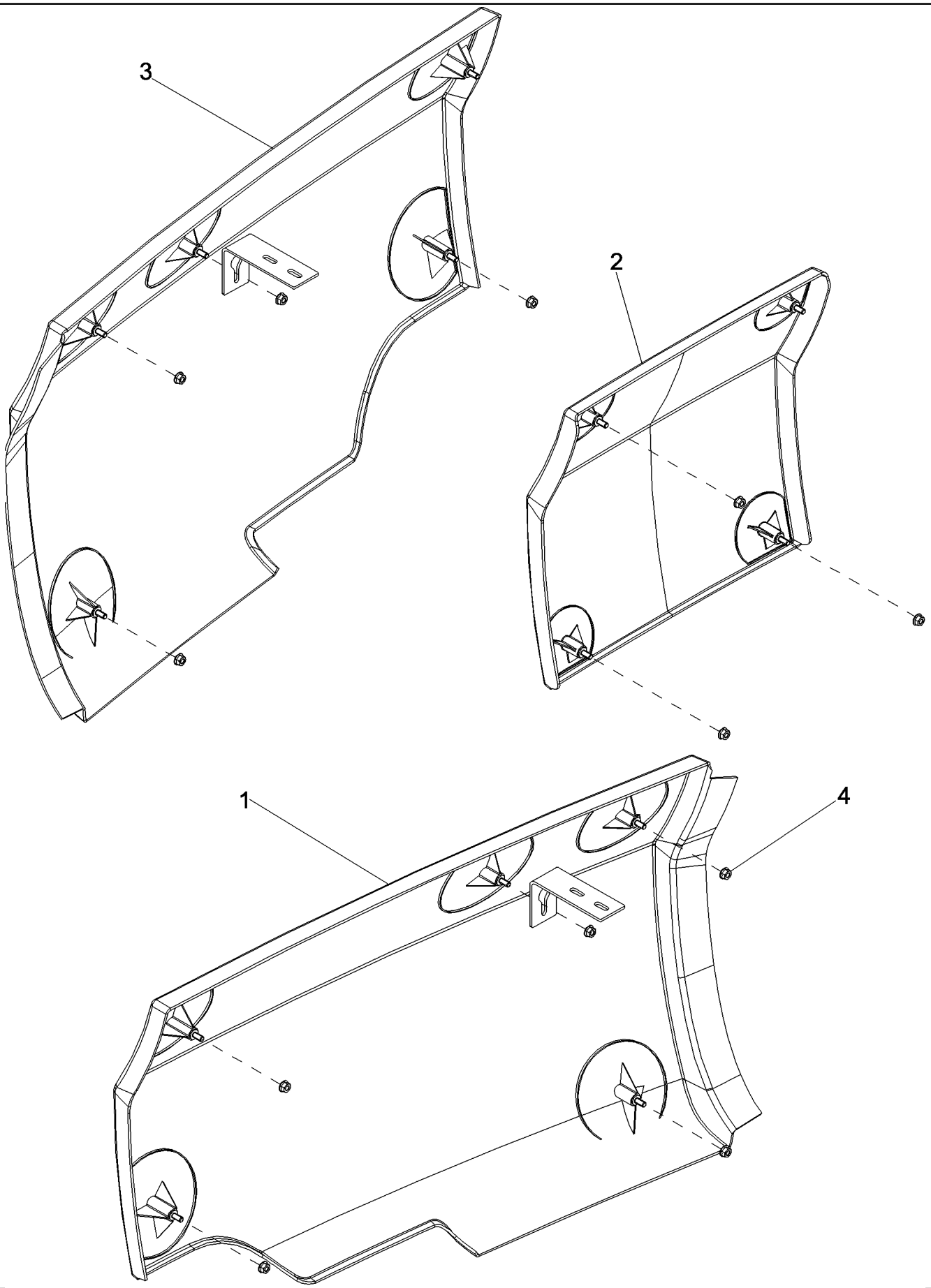

PDF created with pdfFactory trial version www.pdffactory.com

7088 AXIAL-FLOW COMBINE (EU) (4/08-)

09H-17 TRIM PANELS, REAR

ссылка	Номер детали	Кол-во	Описание
1	87688623	1	PANEL ASSY., Tail Light, Left Hand Rear
2	87658407	1	PANEL ASSY., Rear Service Ladder
3	87688625	1	PANEL ASSY., Tail Light, Right Hand Rear
4	86619801	14	NUT, LOCK, M8 x 1.25, Flg, Cl 8,

PDF created with pdfFactory trial version www.pdffactory.com

7088 AXIAL-FLOW COMBINE (EU) (4/08-)

09H-18 CORNER COVERS, GRAIN TANK, FRONT

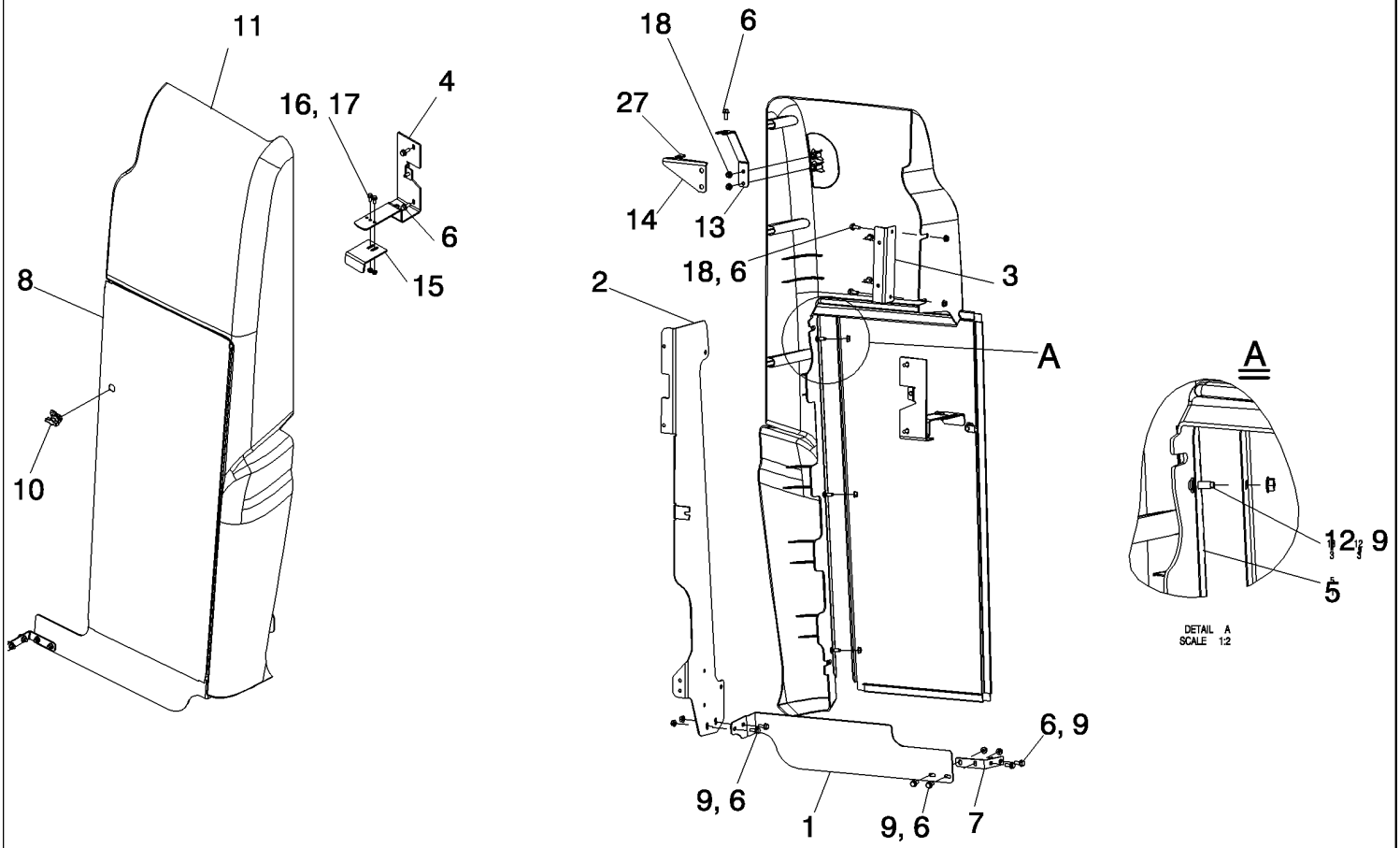

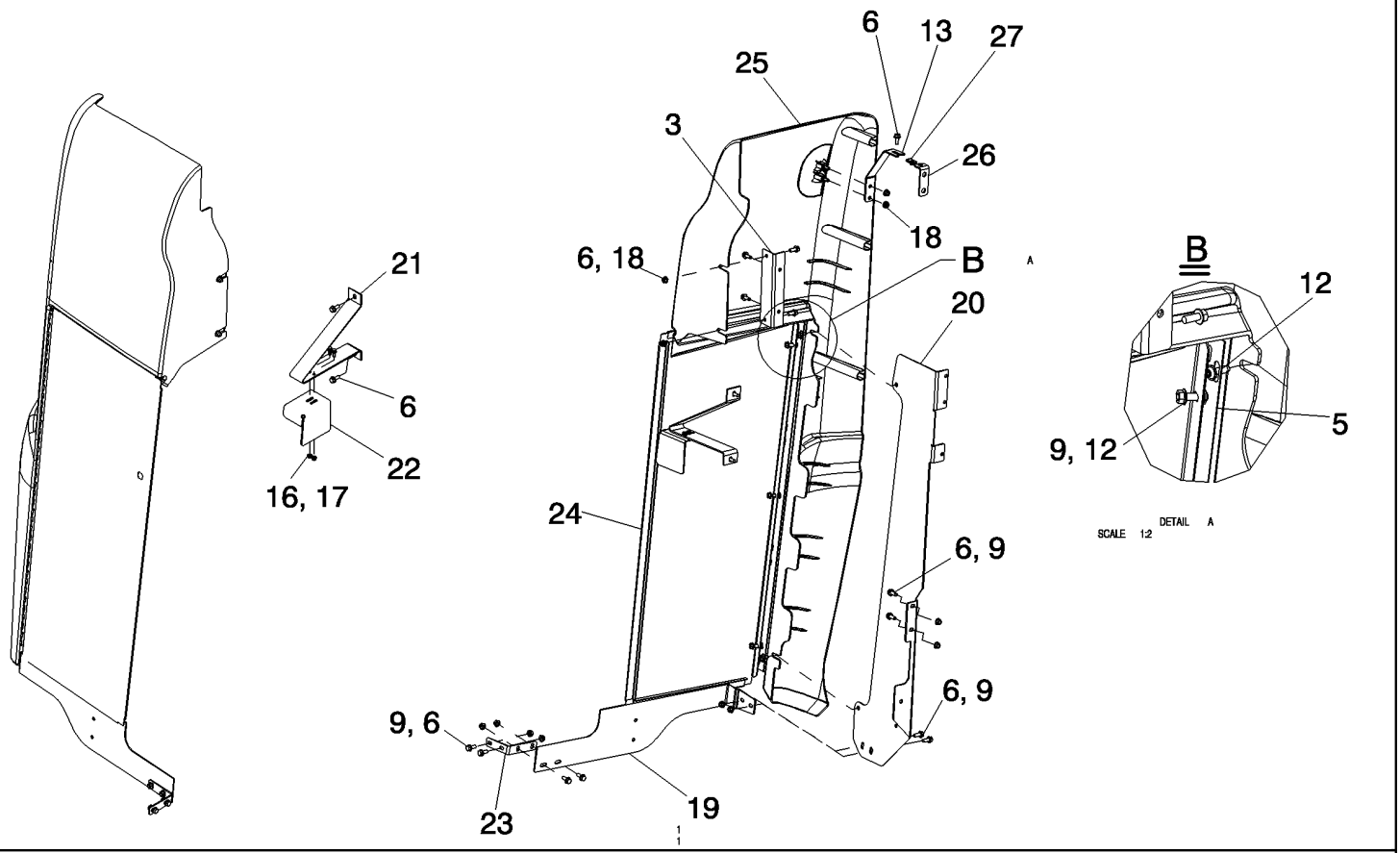

PDF created with pdfFactory trial version www.pdffactory.com

7088 AXIAL-FLOW COMBINE (EU) (4/08-)

09H-18 CORNER COVERS, GRAIN TANK, FRONT

ссылка	Номер детали	Кол-во	Описание
1	87650547	1	BRACKET, Lower Door, Left Hand
2	87758254	1	SUPPORT ASSY., Door, Left Hand
3	87615818	2	BRACKET, Trim
4	87615815	1	BRACKET, Two Speed Feeder Control
5	128919A3	2	HINGE, Grain Tank Trim Door
6	87656137	28	BOLT, Hex Flg, M8 x 20, 10.9, Full Thd,
7	87545916	1	SUPPORT, Left Bracket
8	141429A3	1	DOOR, Front Grain Tank Trim, Left Hand
9	86507066	20	NUT, M8 x 1.25, Flg, Cl 10,
10	182925A1	1	LOCK, Shield
11	87658411	1	PANEL ASSY., Grain Tank Corner, Left Hand
12	87698833	14	BOLT,
13	87709069	2	BRACKET, Grain Tank Corner
14	87757942	1	BRACKET, Grain Tank Corner, Left Hand
15	141786A3	1	SUPPORT, Door Latch Keeper
16	87695418	4	BOLT,
17	86050300	4	NUT, M6 x 1, Flg, Cl10,
18	86619801	8	NUT, LOCK, M8 x 1.25, Flg, Cl 8,
19	87703141	1	BRACKET, Lower Door, Right Hand
20	87758257	1	BRACKET, Door, Right Hand
21	87615815	1	BRACKET, Door Latch
22	190232A2	1	SUPPORT, Door Latch With Guard
23	87545914	1	SUPPORT, Right Bracket
24	84136359	1	DOOR, Front Grain Tank Trim, Right Hand
25	87658410	1	PANEL ASSY., Grain Tank Corner, Right Hand
26	87757940	1	BRACKET, Grain Tank Corner, Right Hand
27	86625074	2	NUT,
28	140075	4	WASHER, M8 x 30,

PDF created with pdfFactory trial version www.pdffactory.com

09H-19 LADDER, REAR SERVICE

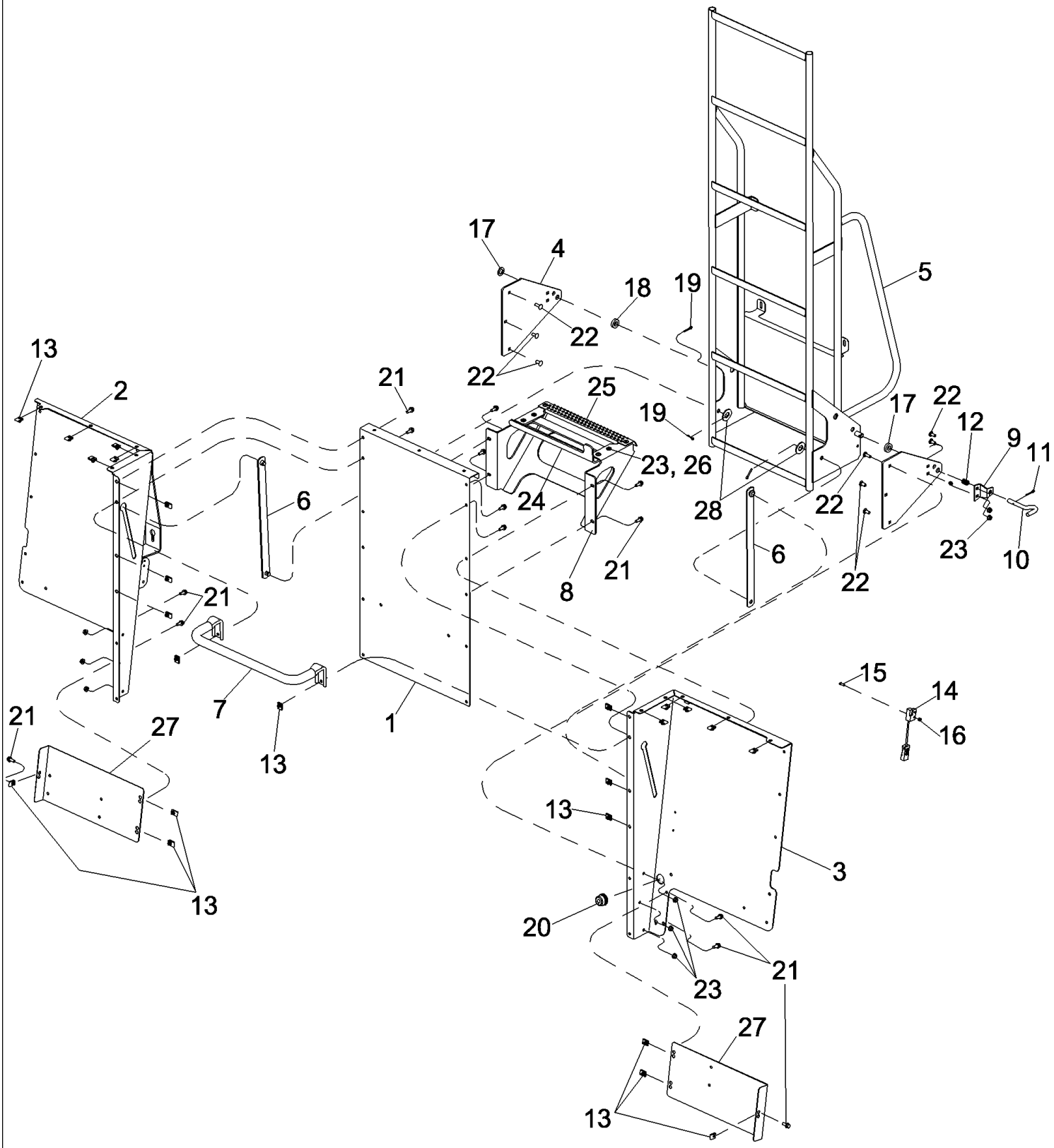

PDF created with pdfFactory trial version www.pdffactory.com

7088 AXIAL-FLOW COMBINE (EU) (4/08-)

09H-19 LADDER, REAR SERVICE

ссылка	Номер детали	Кол-во	Описание
1	87593899	1	BRACKET, Rear Ladder
2	87735830	1	BRACKET, Rear Ladder, Right Hand
3	87735827	1	BRACKET, Rear Ladder, Left Hand
4	84137599	2	PLATE, Ladder Pivot
5	87650811	1	LADDER, Rear Service
6	87599478	2	SUPPORT ASSY., Ladder Slip Link
7	87593888	1	TUBE, Tank Hood
8	87593885	1	BRACKET, Ladder
9	87599486	1	BRACKET, Ladder Pin Support
10	87755002	1	PIN, Ladder Support
11	38-1813	1	PIN, LOCK, 1/8" x 13/16", Slotted,
12	540815R2	1	SPRING,
13	86508354	22	NUT,
14	87592843	1	SENDER UNIT, Ladder With Reed Switch
15	463-11010	1	SCREW, Hex Hd, #10-24 x 5/8",
16	231-14109	1	NUT, LOCK, #10-24, GB,
17	140020	2	WASHER, M16 x 30 x 3,
18	1316828C1	2	SPACER, Left Hand Runner Pivot
19	432-1216	4	PIN, SPLIT (COTTER), 3/16" x 1",
20	198824C1	1	GROMMET,
21	87656137	26	BOLT, Hex Flg, M8 x 20, 10.9, Full Thd,
22	87682383	8	BOLT,
23	86507066	28	NUT, M8 x 1.25, Flg, Cl 10,
24	87593883	1	BRACKET, Ladder Stop
25	87595454	1	BRACKET, Service Ladder Upper
26	87624708	6	SCREW,
27	87593881	2	RUNNER, Rear Hood Access
28	495-51053	2	WASHER, 1/2",

PDF created with pdfFactory trial version www.pdffactory.com

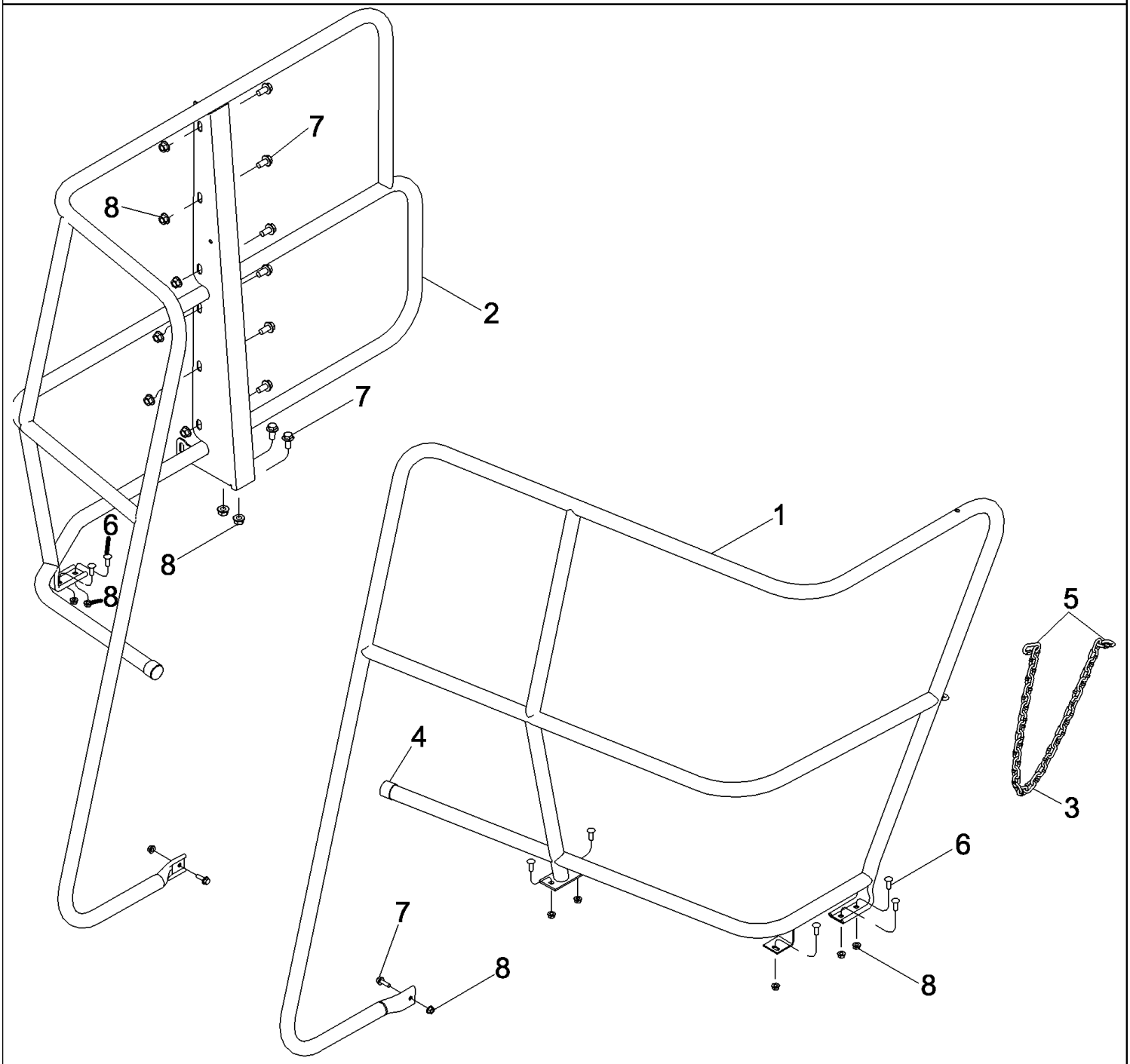

RI08C130

PDF created with pdfFactory trial version www.pdffactory.com

7088 AXIAL-FLOW COMBINE (EU) (4/08-)

09H-20 HAND RAILS - DECK, SERVICE

ссылка	Номер детали	Кол-во	Описание
1	87689356	1	RAIL ASSY., Service Deck, Right Hand
2	87487567	1	RAIL ASSY., Service Deck, Left Hand
3	87109887	1	CHAIN, Ladder Gate
4	87638219	2	CAP,
5	87107072	2	LINK, Chain
6	87682385	7	BOLT,
7	87698833	2	BOLT,
8	86507066	9	NUT, M8 x 1.25, Flg, Cl 10,
9	87343550	9	BOLT,
10	86512497	9	NUT, M12 x 1.75, Flg, Cl 10,

PDF created with pdfFactory trial version www.pdffactory.com

09H-21 LADDER, OPERATORS

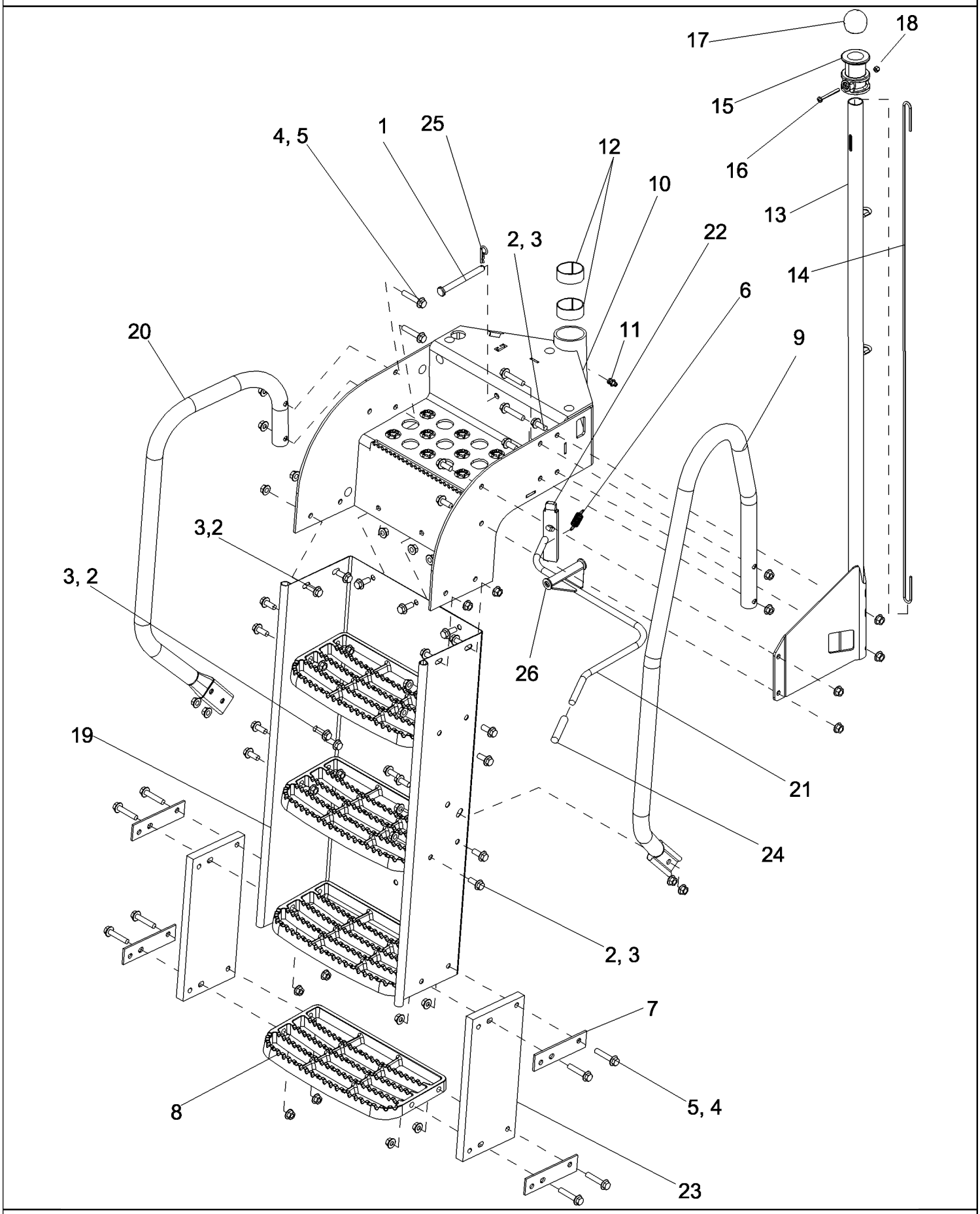

PDF created with pdfFactory trial version www.pdffactory.com

7088 AXIAL-FLOW COMBINE (EU) (4/08-)

09H-21 LADDER, OPERATORS

ссылка	Номер детали	Кол-во	Описание
1	728-12120	1	PIN, CLEVIS,
2	86705429	23	BOLT,
3	86050279	23	NUT, M10 x 1.5, Flg, Cl 10,
4	86619802	12	NUT, LOCK,
5	857-10050	12	BOLT, Hex Flg, M10 x 50, 10.9,
6	87283313	1	SPRING, Spreader Lock Handle
7	87301177	4	PLATE, Belting Support
8	87301185	4	STEP,
9	84164335	1	HANDRAIL, Right Hand
10	84165141	1	SUPPORT ASSY., Inc. 11, 12
11	219-87	1	NIPPLE, LUBE, 1/4"-28 x .56" lg, Self-Tap,
12	142381A1	2	BUSHING,
13	84180891	1	PACKAGE, REPAIR, Ladder Latch, Post With Decal
14	87536366	1	ROD, ADJUSTMENT, Ladder Latch
15	349015A1	1	KNOB, Ladder Latch
16	840-1660	1	SCREW, Cross Pan Hd, M6 x 60,
17	87109879	1	KNOB, Ladder Latch
18	832-10406	1	NUT, LOCK, M6 x 1, Cl 8,
19	87536623	1	CHANNEL, Ladder Rear
20	84158639	1	HANDRAIL, Left Hand
21	87703650	1	SPRING, Ladder
22	87680133	1	PIN, Ladder Latch
23	87551810	2	CANVAS, Ladder Bottom Step
24	324455A1	1	PROTECTOR, Ladder Handle
25	216698	1	HAIR PIN COTTER, Int, 5/16" x 1.75" x 0.125",
26	86511324	2	WASHER, M12 x 24 x 2.5,

PDF created with pdfFactory trial version www.pdffactory.com

09H-22 PLATFORM, OPERATORS - LEFT HAND

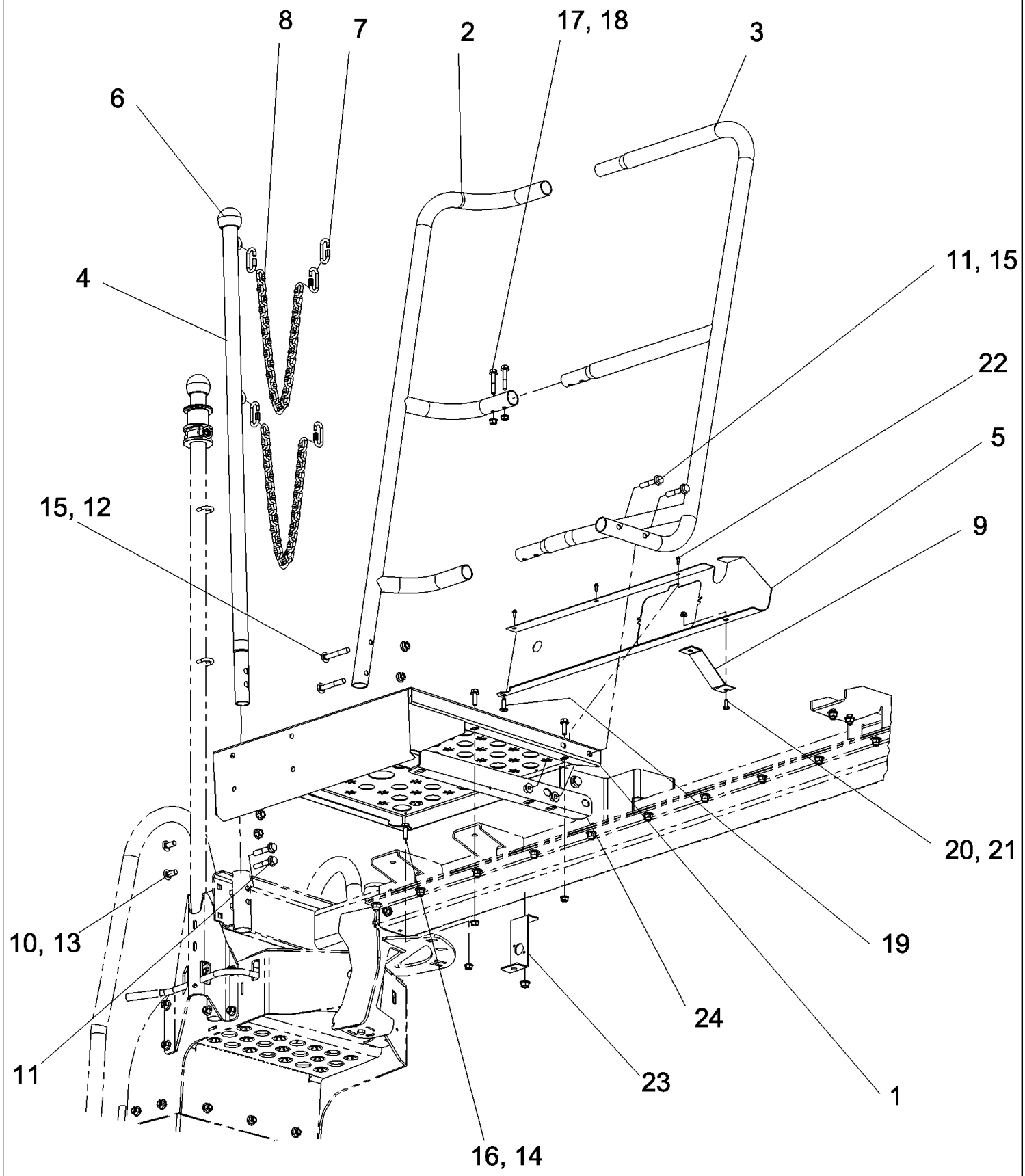

PDF created with pdfFactory trial version www.pdffactory.com

7088 AXIAL-FLOW COMBINE (EU) (4/08-)

09H-22 PLATFORM, OPERATORS - LEFT HAND

ссылка	Номер детали	Кол-во	Описание
1	84158406	1	PLATFORM ASSY., 24 Inch
2	87604227	1	HANDRAIL, Front Outside
3	87604223	1	HANDRAIL, Front Short
4	87109394	1	GRAB RAIL,
5	84158403	1	CHANNEL, Left Hand Front
6	87109879	1	KNOB, Ladder Latch
7	326376A2	5	LINK, Ladder Chain
8	324546A1	2	CHAIN, Ladder Gate
9	230753A1	1	SUPPORT, Left Hand Trim Brace
10	86050279	2	NUT, M10 x 1.5, Flg, Cl 10,
11	857-10050	4	BOLT, Hex Flg, M10 x 50, 10.9,
12	811-10070	2	BOLT, CARRIAGE, Short NK, M10 x 70, Cl8.8,
13	87682391	2	BOLT, Short NK, M10 x 25, Cl 10.9,
14	86507066	3	NUT, M8 x 1.25, Flg, Cl 10,
15	86619802	4	NUT, LOCK,
16	857-8025	3	BOLT, Hex Flg, M8 x 25, 10.9,
17	844-8045	2	BOLT, Hex Flg, M8 x 45, 8.8,
18	86619801	2	NUT, LOCK, M8 x 1.25, Flg, Cl 8,
19	87624708	1	SCREW,
20	87695418	1	BOLT,
21	86619800	1	NUT, LOCK, M6 x 1, Flg, Cl 8,
22	282-1448	3	SCREW, SELF TAPPING, Hex Wash Hd, #8 x 1/2",
23	87392239	1	BRACKET, Left Hand Aftercut Light
24	84158772	1	BRACKET, Ladder Support

PDF created with pdfFactory trial version www.pdffactory.com

7088 AXIAL-FLOW COMBINE (EU) (4/08-)

09H-23 EXTENSION ASSEMBLY, 34 INCH DECK

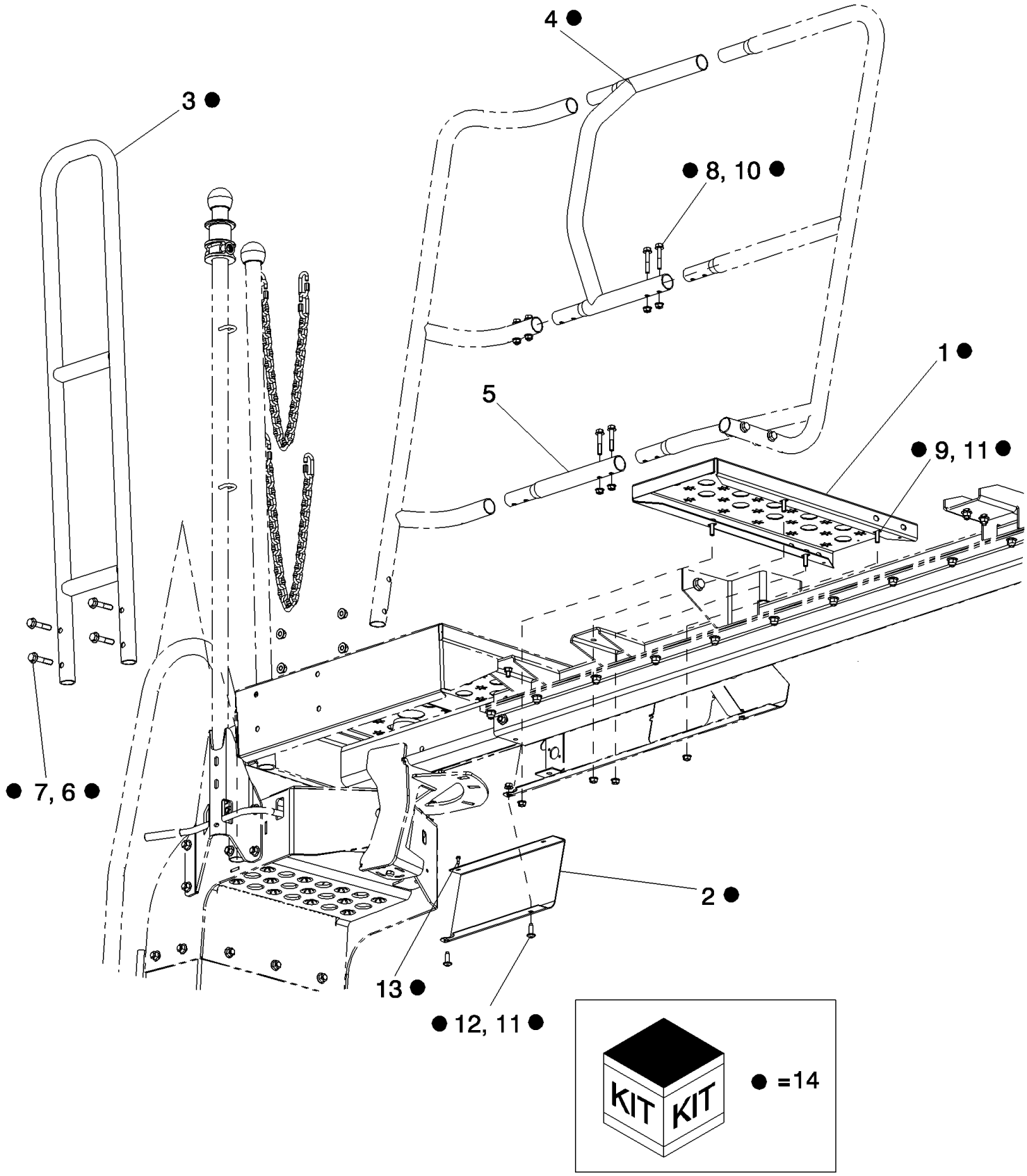

PDF created with pdfFactory trial version www.pdffactory.com

7088 AXIAL-FLOW COMBINE (EU) (4/08-)

09H-23 EXTENSION ASSEMBLY, 34 INCH DECK

ссылка	Номер детали	Кол-во	Описание
1	84158413	1	EXTENSION ASSY., 10 Inch Extension
2	87665151	1	CHANNEL, Short Extension
3	87607104	1	HANDRAIL, Rear
4	87604237	1	EXTENSION ASSY., Left Hand Handrail
5	87619742	1	EXTENSION ASSY., Handrail Extension
6	857-10050	4	BOLT, Hex Flg, M10 x 50, 10.9,
7	86619802	4	NUT, LOCK,
8	844-8045	4	BOLT, Hex Flg, M8 x 45, 8.8,
9	857-8025	4	BOLT, Hex Flg, M8 x 25, 10.9,
10	86619801	4	NUT, LOCK, M8 x 1.25, Flg, Cl 8,
11	86507066	5	NUT, M8 x 1.25, Flg, Cl 10,
12	87624708	1	SCREW,
13	282-1448	1	SCREW, SELF TAPPING, Hex Wash Hd, #8 x 1/2",
14	87479324	1	EXTENSION ASSY., DIA Kit, 34 Inch Deck, Inc. 1-13

PDF created with pdfFactory trial version www.pdffactory.com

7088 AXIAL-FLOW COMBINE (EU) (4/08-)

09H-24 PLATFORM SUPPORT - LADDER PIVOT

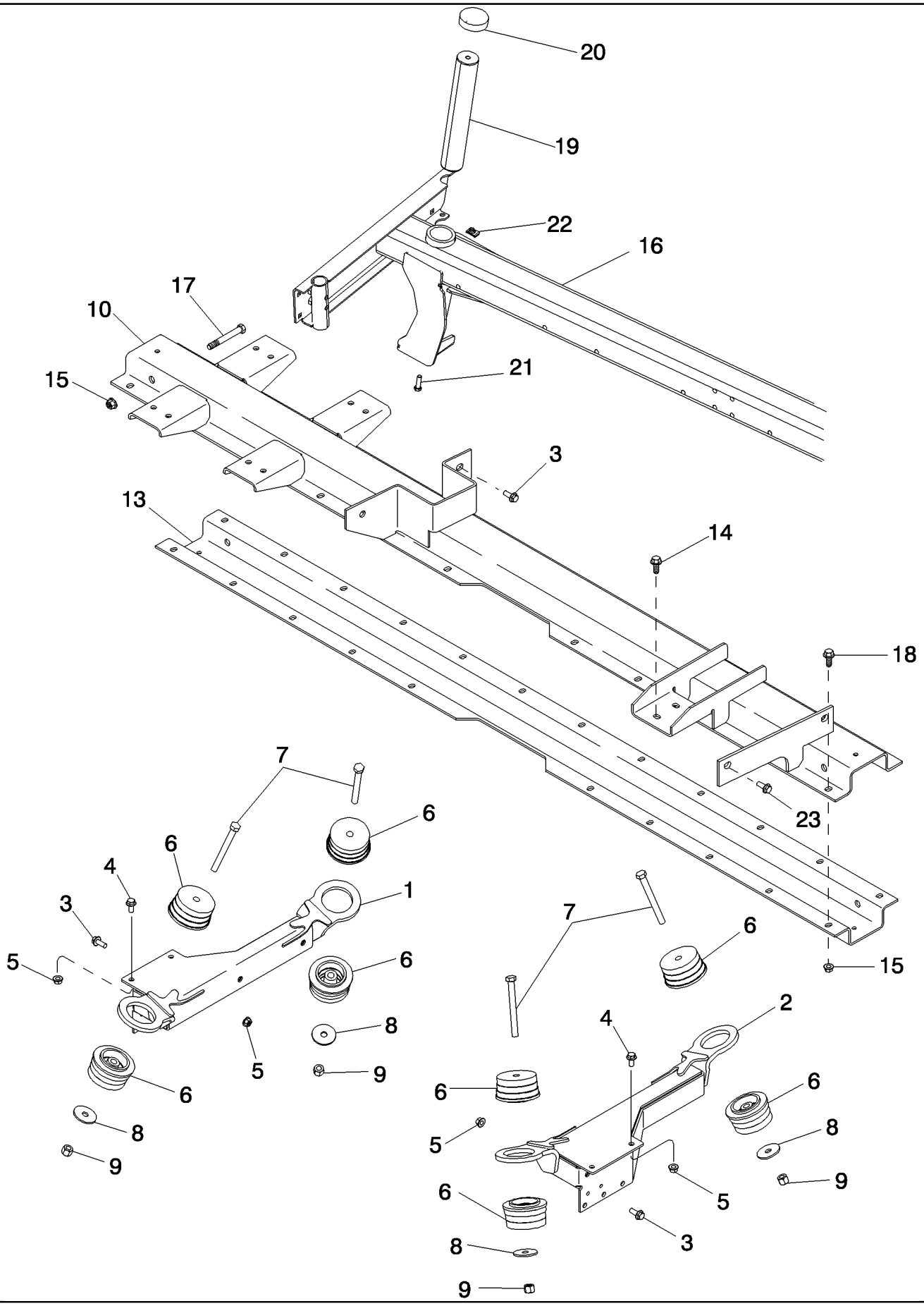

PDF created with pdfFactory trial version www.pdffactory.com

7088 AXIAL-FLOW COMBINE (EU) (4/08-)

09H-24 PLATFORM SUPPORT - LADDER PIVOT

ссылка	Номер детали	Кол-во	Описание
1	87386691	1	MOUNTING PARTS, Cab, Left Hand
2	87386692	1	MOUNTING PARTS, Cab, Right Hand
3	87030508	14	BOLT, Hex Flg, M12 x 30, 10.9, Full Thd,
4	87343550	4	BOLT,
5	86512497	10	NUT, M12 x 1.75, Flg, Cl 10,
6	123566A1	8	ISOLATOR,
7	426-1096	4	BOLT, Hex, 5/8"-11 x 6", G8,
8	87032338	4	WASHER, 21/32" x 2 1/2" x .188", HDN,
9	232-41110	4	NUT, LOCK, 5/8"-11, GC,
10	84158411	1	CHANNEL, Operator Deck, Left Hand
13	87665480	1	CHANNEL, Operator Deck, Left Hand
14	86705429	2	BOLT,
15	86050279	27	NUT, M10 x 1.5, Flg, Cl 10,
16	87755474	1	BEAM ASSY., Operator Deck, Left Hand
17	87681205	1	BOLT,
18	87682391	24	BOLT, Short NK, M10 x 25, Cl 10.9,
19	320946A1	1	PIN, Ladder Retention
20	324464A1	1	PLUG, Pivot Pin
21	413-620	1	BOLT, Hex, 3/8"-16 x 1 1/4", G5, Full Thd,
22	86625074	1	NUT,
23	86705431	2	BOLT,

PDF created with pdfFactory trial version www.pdffactory.com

09H-25 PLATFORM - LADDER, RIGHT HAND

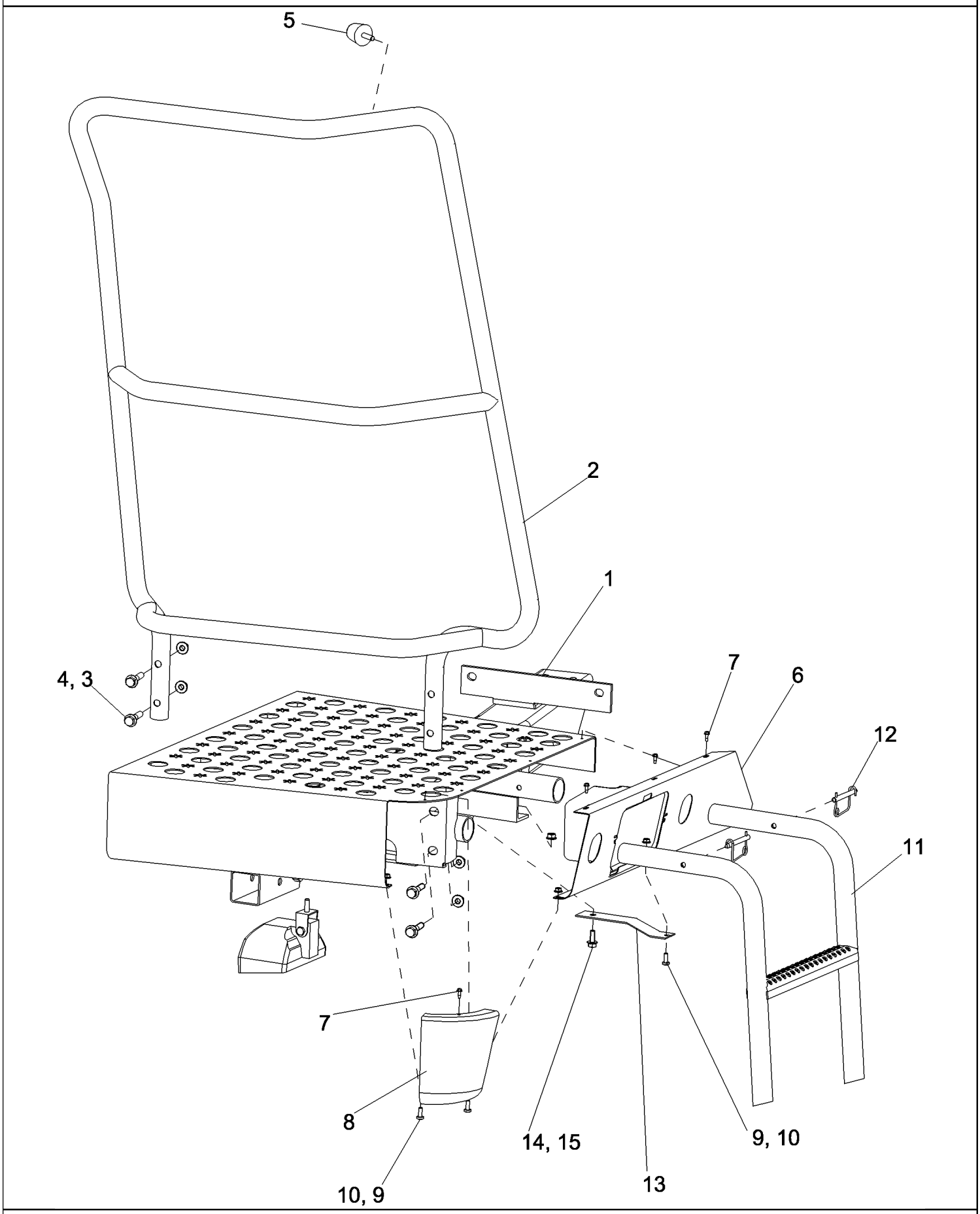

PDF created with pdfFactory trial version www.pdffactory.com

7088 AXIAL-FLOW COMBINE (EU) (4/08-)

09H-25 PLATFORM - LADDER, RIGHT HAND

ссылка	Номер детали	Кол-во	Описание
1	87588623	1	PLATFORM, Right Hand
2	87583865	1	HANDRAIL, Right Hand
3	857-10050	4	BOLT, Hex Flg, M10 x 50, 10.9,
4	86619802	4	NUT, LOCK,
5	87109195	1	BUMPER,
6	84158909	1	CHANNEL, Platform Trim, Right Hand Front
7	282-1448	4	SCREW, SELF TAPPING, Hex Wash Hd, #8 x 1/2",
8	118938A1	1	SUPPORT, Platform Trim, Right Hand Corner
9	87695418	3	BOLT,
10	86619800	3	NUT, LOCK, M6 x 1, Flg, Cl 8,
11	87389578	1	LADDER,
12	1338021C1	2	PIN, Latch Locking
13	230752A1	1	SUPPORT, Right Hand Trim Brace
14	87656137	1	BOLT, Hex Flg, M8 x 20, 10.9, Full Thd,
15	86619801	1	NUT, LOCK, M8 x 1.25, Flg, Cl 8,

PDF created with pdfFactory trial version www.pdffactory.com

7088 AXIAL-FLOW COMBINE (EU) (4/08-)

09H-26 HITCH ASSEMBLY, FIXED HOOK RECEIVER

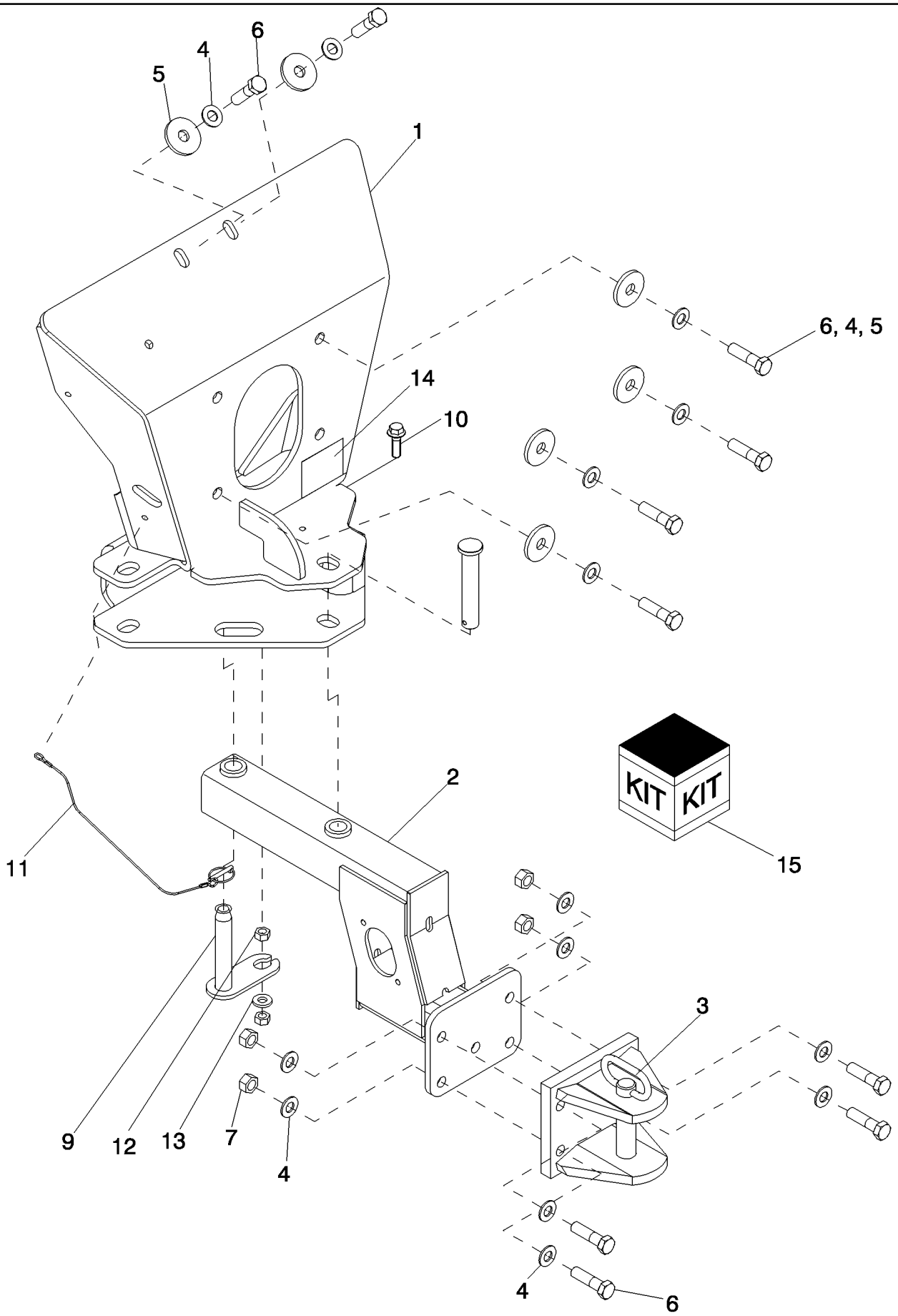

PDF created with pdfFactory trial version www.pdffactory.com

7088 AXIAL-FLOW COMBINE (EU) (4/08-)

09H-26 HITCH ASSEMBLY, FIXED HOOK RECEIVER

ссылка	Номер детали	Кол-во	Описание
1	84129659	1	KIT, SERVICE, Support, Inc. 14
2	87590976	1	ARM ASSY., Hitch
3	84400985	1	HITCH, Fixed Trailer
4	140048	14	WASHER, SPRING, Belleville, M16,
5	337522	6	WASHER, M16 x 56 x 5,
6	120091	10	BOLT, Hex, M16 x 60, 8.8,
7	100020	4	NUT, M16, Cl 8,
8	86984254	1	PIN, CLEVIS, M24 x 135,
9	84129776	1	PIN, LOCKING, Hitch
10	87695413	1	BOLT,
11	87668116	1	PIN, LOCK,
12	9706685	2	NUT, M12, Cl 8,
13	86625256	1	WASHER, M12 x 28.5 x 4, HT,
14	84446050	1	DECAL, Weight Limit
15	87731447	1	PACKAGE,SERVICE, DIA, Fixed Hook Receiver Hitch, 6088, 7088

PDF created with pdfFactory trial version www.pdffactory.com

7088 AXIAL-FLOW COMBINE (EU) (4/08-)

09H-27 HITCH ASSEMBLY, AUTO ROTATING

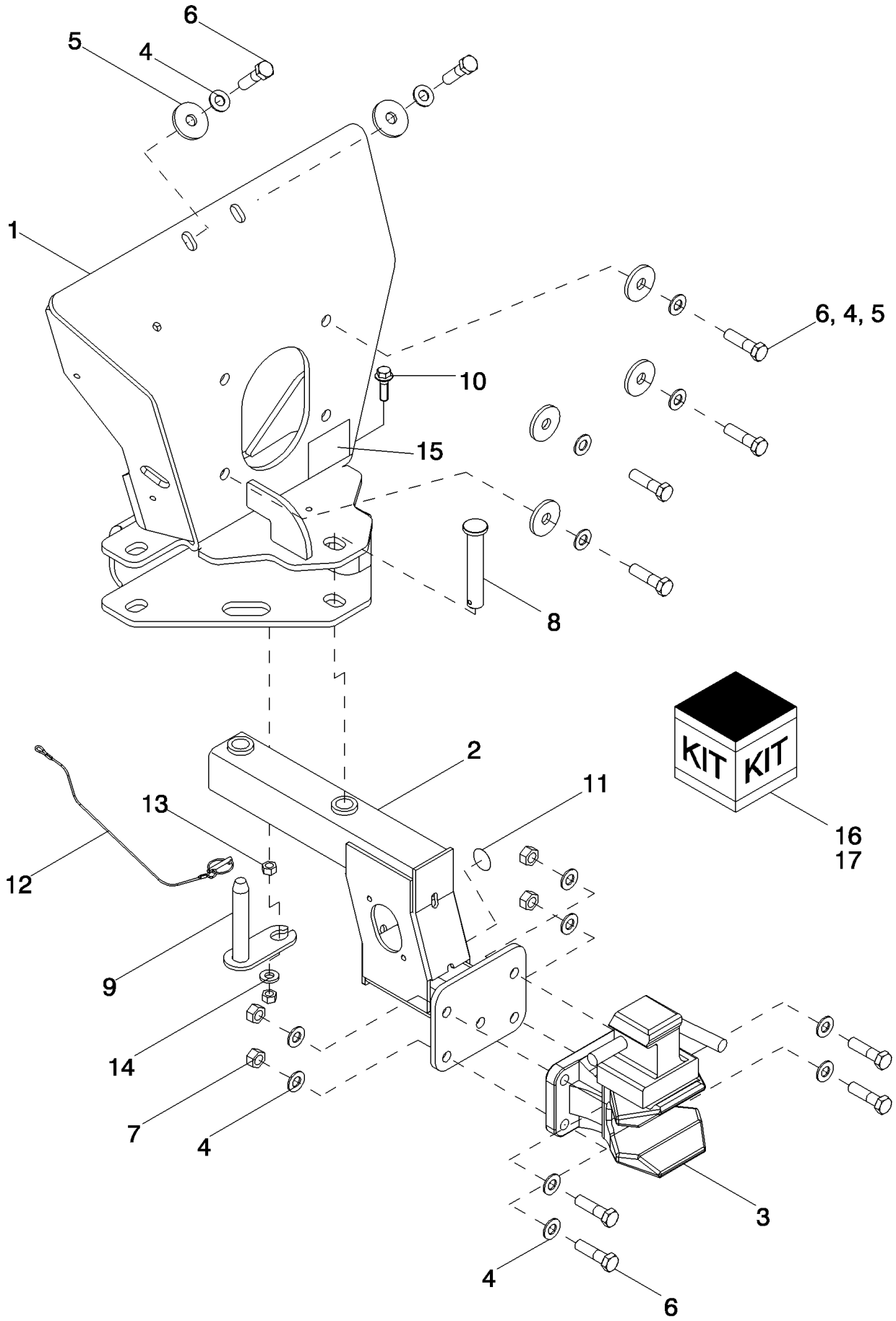

PDF created with pdfFactory trial version www.pdffactory.com

7088 AXIAL-FLOW COMBINE (EU) (4/08-)

09H-27 HITCH ASSEMBLY, AUTO ROTATING

ссылка	Номер детали	Кол-во	Описание
1	84129659	1	KIT, SERVICE, Support, Inc. 15
2	87590976	1	ARM ASSY., Hitch
3	84400986	1	HITCH, Auto Rotating Trailer
4	140048	14	WASHER, SPRING, Belleville, M16,
5	337522	6	WASHER, M16 x 56 x 5,
6	120091	10	BOLT, Hex, M16 x 60, 8.8,
7	100020	4	NUT, M16, Cl 8,
8	86984254	1	PIN, CLEVIS, M24 x 135,
9	84129776	1	PIN, LOCKING, Hitch
10	87695413	1	BOLT,
11	84334828	1	DECAL, 100 Hour
12	87668116	1	PIN, LOCK, With Tether
13	9706685	2	NUT, M12, Cl 8,
14	86625256	1	WASHER, M12 x 28.5 x 4, HT,
15	84446050	1	DECAL, Weight Limit
16	87731445	1	PACKAGE,SERVICE, DIA, Auto Rotating Hitch, 5088
17	87731446	1	PACKAGE,SERVICE, DIA, Auto Rotating Hitch, 6088, 7088

PDF created with pdfFactory trial version www.pdffactory.com

7088 AXIAL-FLOW COMBINE (EU) (4/08-)

09H-28 FRONT SIGNAL PLATE

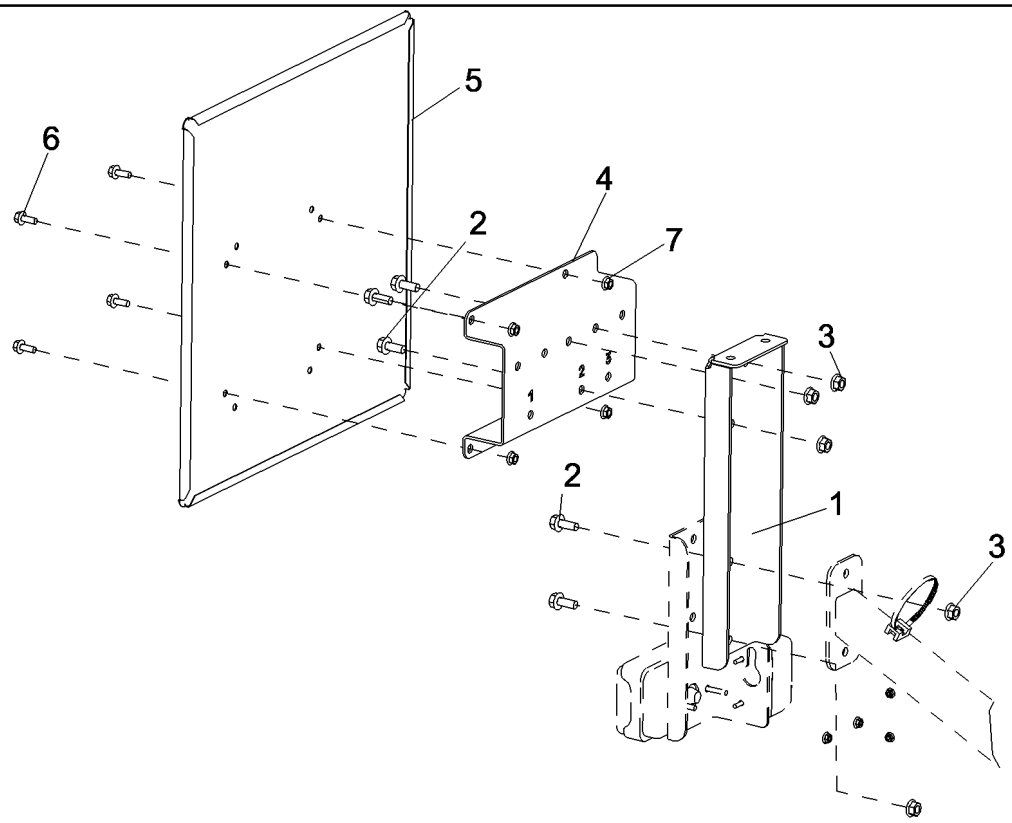

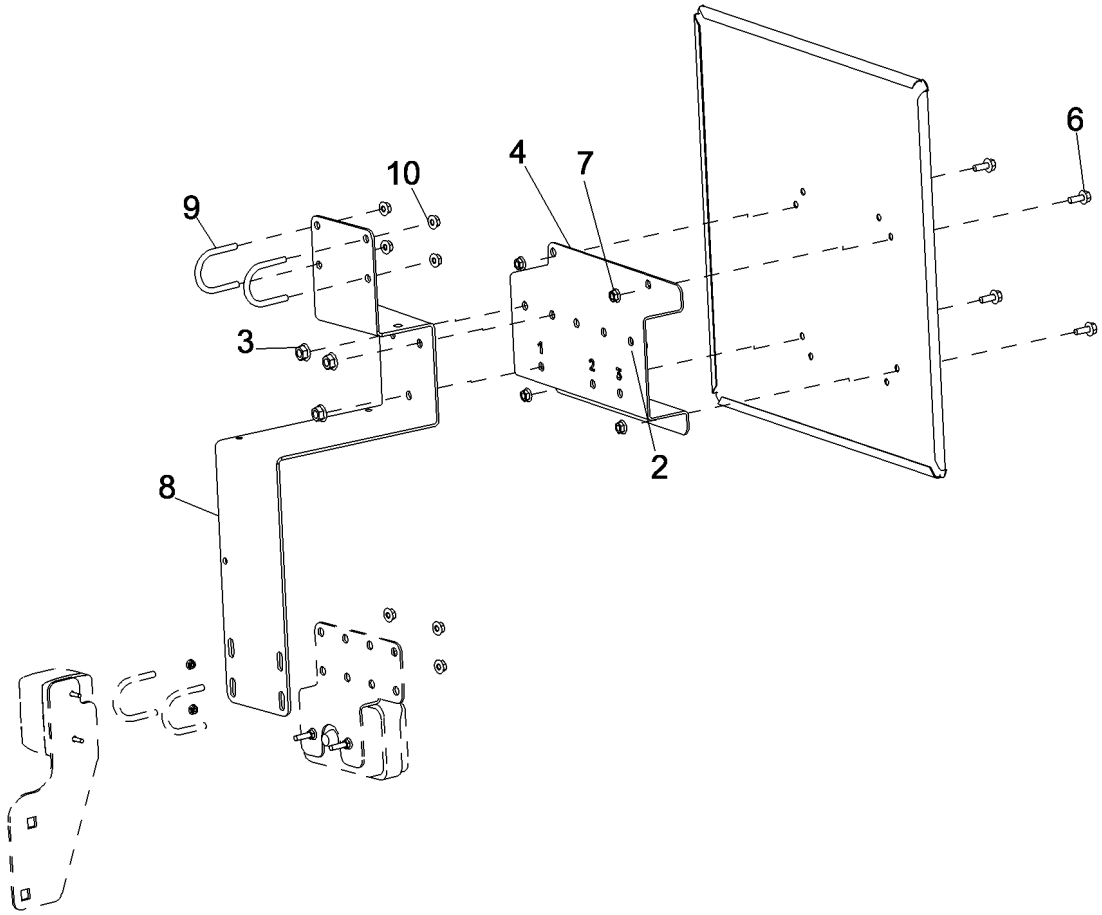

PDF created with pdfFactory trial version www.pdffactory.com

7088 AXIAL-FLOW COMBINE (EU) (4/08-)

09H-28 FRONT SIGNAL PLATE

ссылка	Номер детали	Кол-во	Описание
1	87564056	1	BRACKET, Right Hand Signal Plate
2	87656137	8	BOLT, Hex Flg, M8 x 20, 10.9, Full Thd,
3	86507066	8	NUT, M8 x 1.25, Flg, Cl 10,
4	87479301	2	BRACKET, Signal Plate
5	87397550	2	PLATE, Signal Rear
6	87695418	8	BOLT,
7	86050300	8	NUT, M6 x 1, Flg, Cl10,
8	87567408	1	BRACKET, Upper Left Hand Light
9	87703800	2	U-BOLT,
10	87301498	4	NUT,

PDF created with pdfFactory trial version www.pdffactory.com

7088 AXIAL-FLOW COMBINE (EU) (4/08-)

09H-29 REAR SIGNAL PLATE

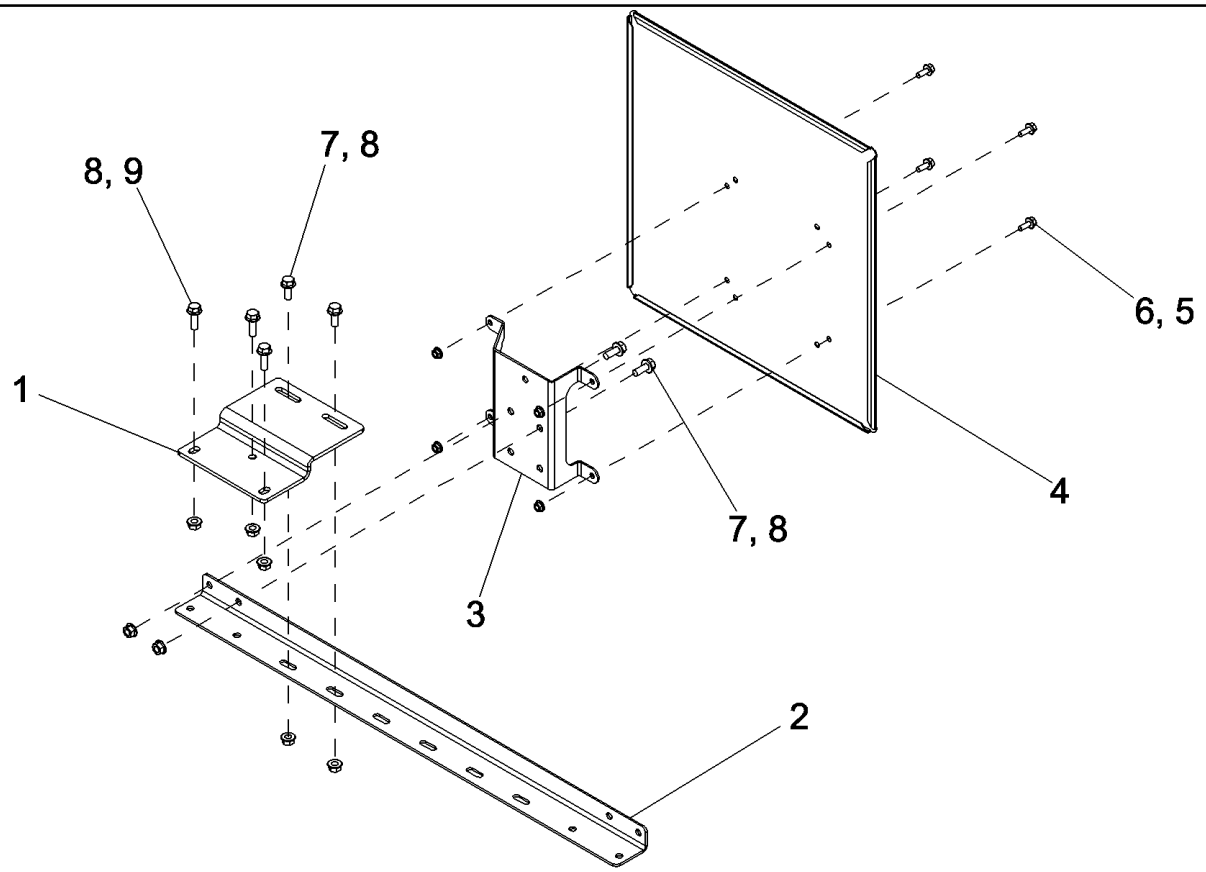

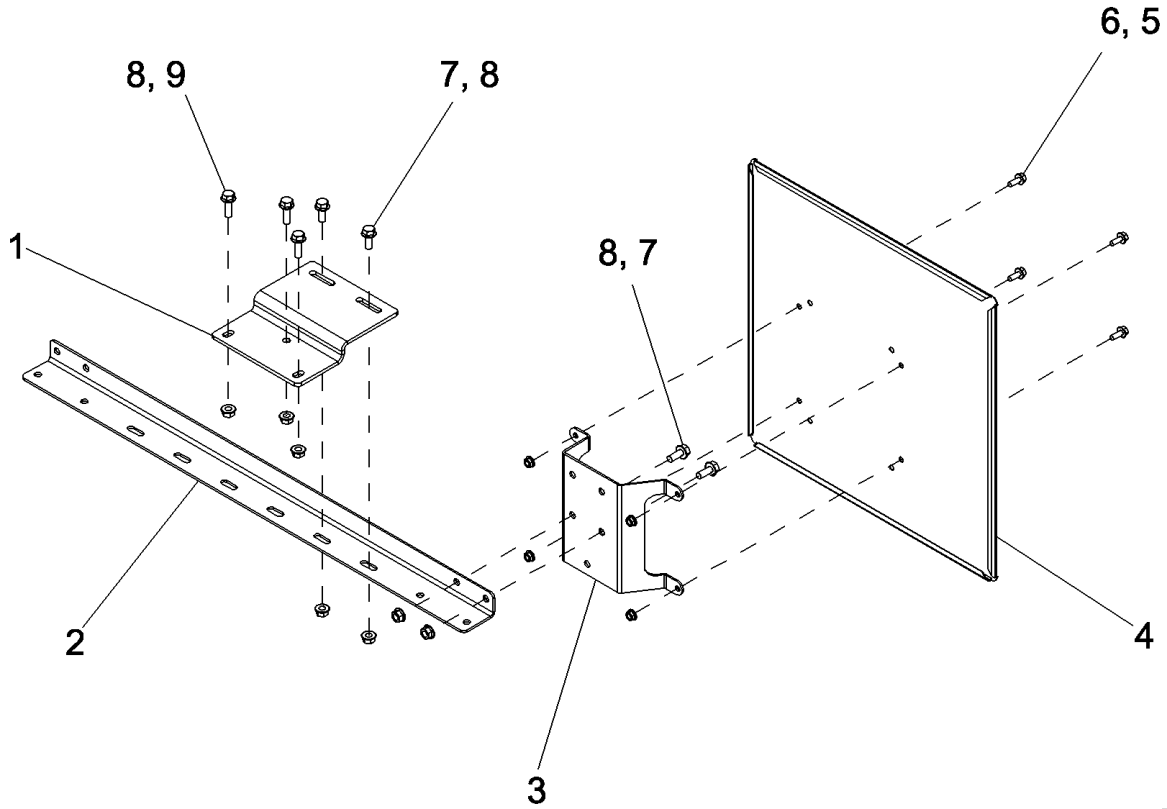

PDF created with pdfFactory trial version www.pdffactory.com

7088 AXIAL-FLOW COMBINE (EU) (4/08-)

09H-29 REAR SIGNAL PLATE

ссылка	Номер детали	Кол-во	Описание
1	87472237	2	ANGLE, Rear Signal Mounting
2	87701593	2	ANGLE, Signal Plate
3	87567410	2	PLATE, Signal Plate
4	87397550	2	PLATE, Rear Signal
5	86050300	8	NUT, M6 x 1, Flg, Cl10,
6	87695418	8	BOLT,
7	87656137	8	BOLT, Hex Flg, M8 x 20, 10.9, Full Thd,
8	86507066	14	NUT, M8 x 1.25, Flg, Cl 10,
9	87698833	6	BOLT,

PDF created with pdfFactory trial version www.pdffactory.com

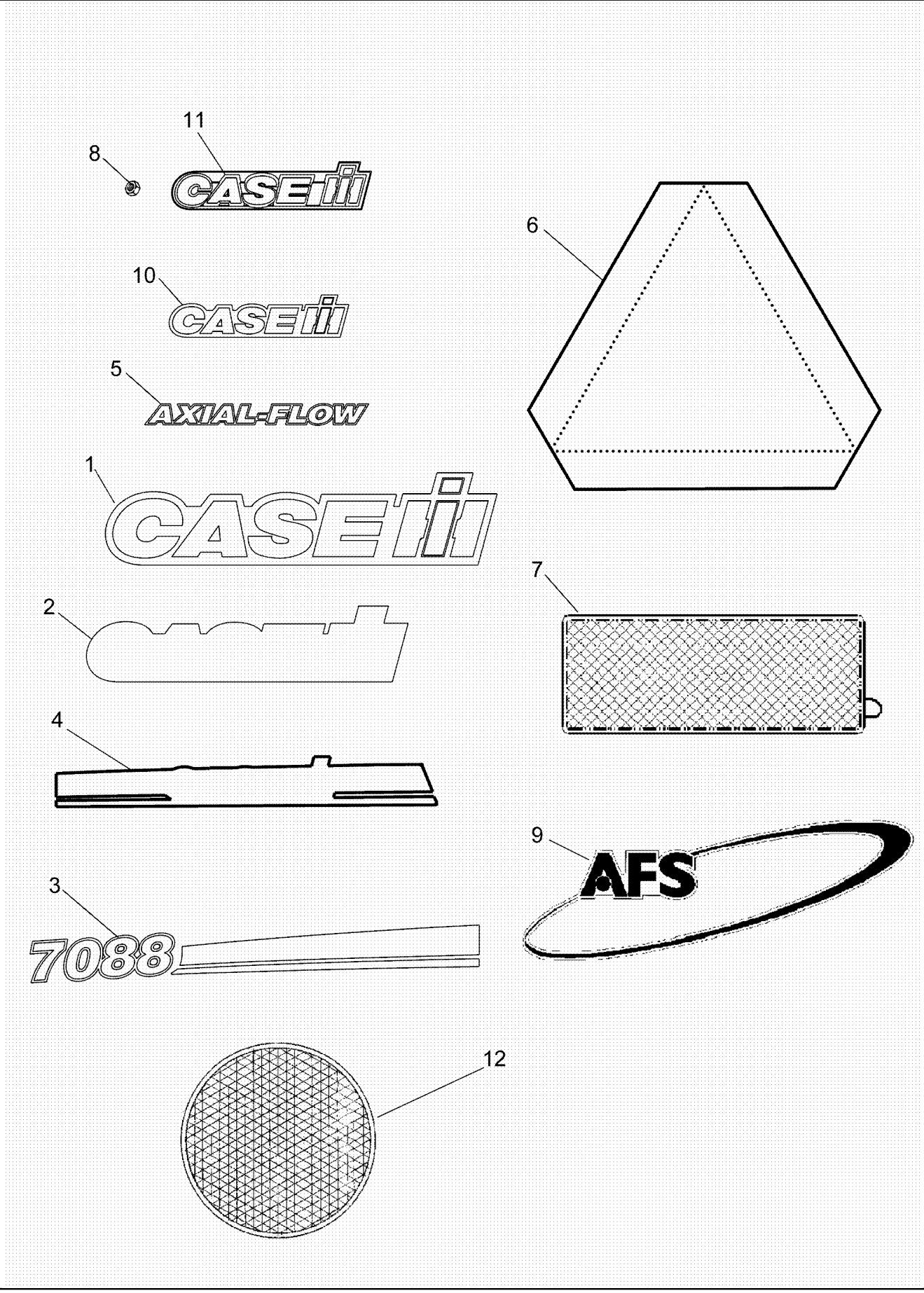

PDF created with pdfFactory trial version www.pdffactory.com

7088 AXIAL-FLOW COMBINE (EU) (4/08-)

09H-30 DECALS

ссылка	Номер детали	Кол-во	Описание
1	87556985	1	DECAL, Case IH Logo, Rear
2	87647829	1	DECAL, Background For Ref. 1
3	87754391	1	DECAL, Left Hand, Front, 5088
3	87754392	1	DECAL, Right Hand, Front, 5088
3	87754393	1	DECAL, Left Hand, Front, 6088
3	87754394	1	DECAL, Right Hand, Front, 6088
3	87754395	1	DECAL, Left Hand, Front, 7088
3	87754396	1	DECAL, Right Hand, Front, 7088
4	87680083	1	DECAL, Left Hand, Rear
4	87680084	1	DECAL, Right Hand, Rear
5	87556579	2	DECAL, Axial Flow
6	311858A1	1	DECAL, Slow Moving Vehicle Emblem
7	1284374C1	2	REFLECTOR, Red
8	131-431	1	NUT, LOCK, Self, Threading, 1/4",
9	87107364	2	DECAL, AFS
10	87556588	2	DECAL, Case IH Logo
11	87557775	1	EMBLEM, Case IH Logo
12	435895	6	REFLECTOR, Orange
12	437024	2	REFLECTOR, Red

PDF created with pdfFactory trial version www.pdffactory.com

09H-31 DECALS - WARNING AND DANGER

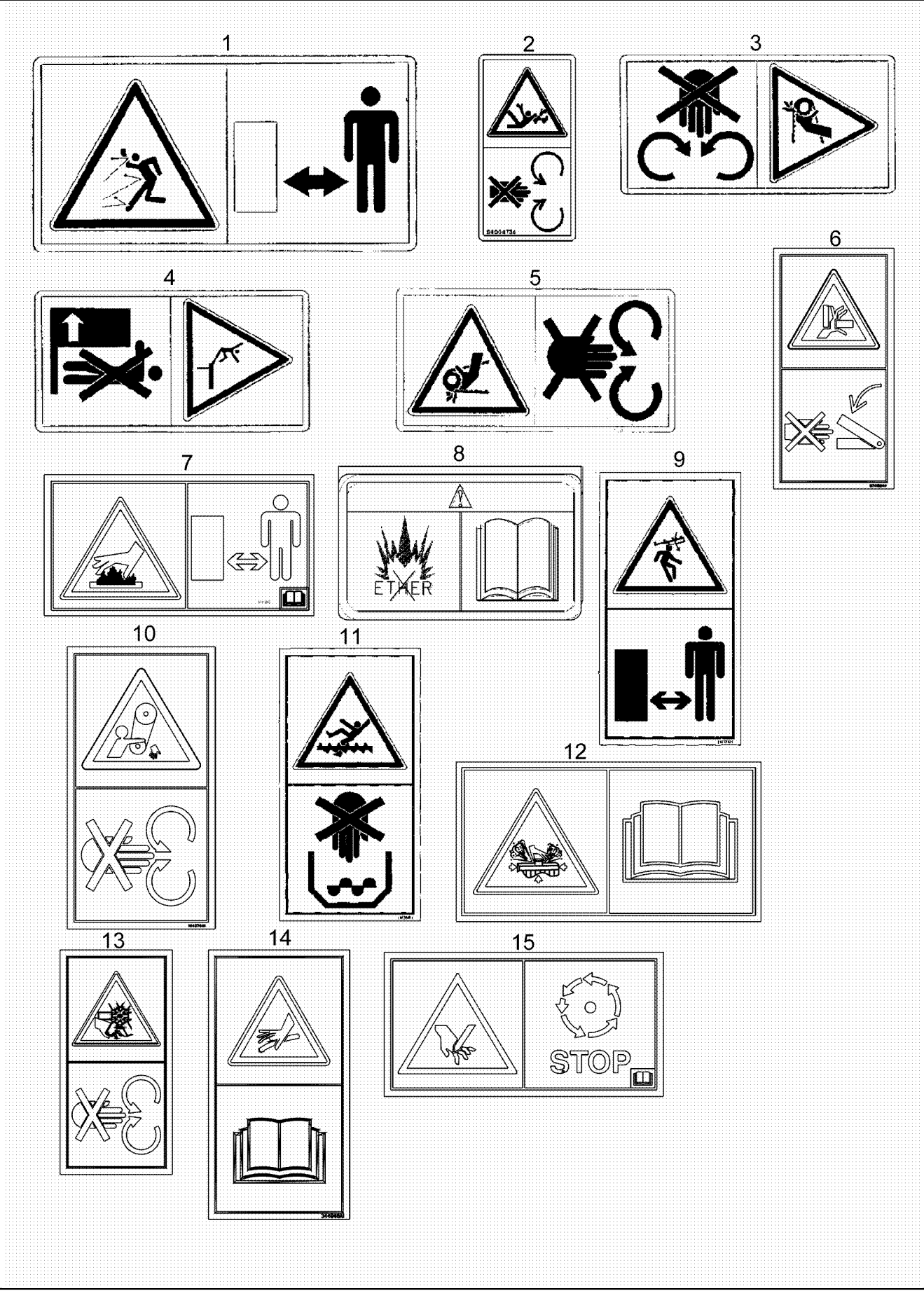

PDF created with pdfFactory trial version www.pdffactory.com

7088 AXIAL-FLOW COMBINE (EU) (4/08-)

09H-31 DECALS - WARNING AND DANGER

ссылка	Номер детали	Кол-во	Описание
1	84004739	2	DECAL,
2	84004736	2	DECAL,
3	84004734	3	DECAL,
4	84004732	1	DECAL,
5	84011345	5	DECAL, Safety Chain Entangle
6	87413244	2	DECAL, Pinch Point
7	87415865	1	DECAL, Hot Surface Hazard
8	87802167	1	DECAL, Ether Warning
9	144371A1	1	DECAL, Ladder Hazard Stay Clear
10	144374A1	2	DECAL, Do Not Open, Belt Entangle
11	144384A1	1	DECAL, Do Not Enter Grain Tank
12	329045A1	1	DECAL, Fluid Under Pressure
13	332511A1	1	DECAL, Fan Hazard
14	344946A1	1	DECAL, Warning Pressurized Vessel
15	87479097	2	DECAL, Rotating Parts

PDF created with pdfFactory trial version www.pdffactory.com

1

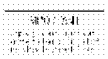

2

4

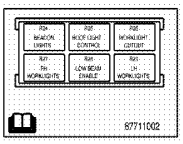

5

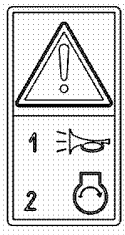

6

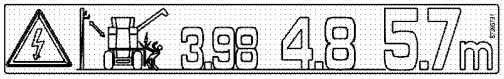

13

7

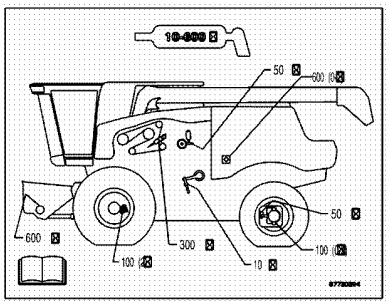

8

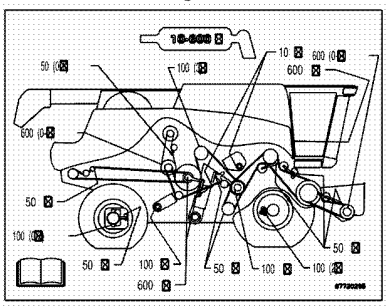

11

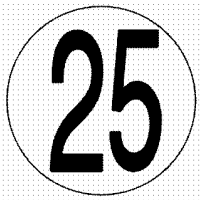

9

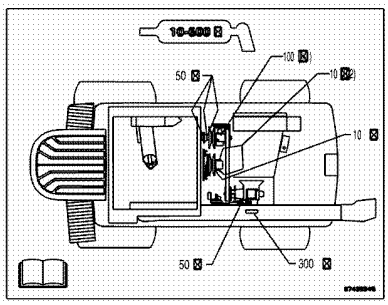

10

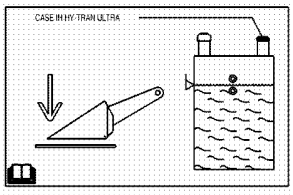

12

3

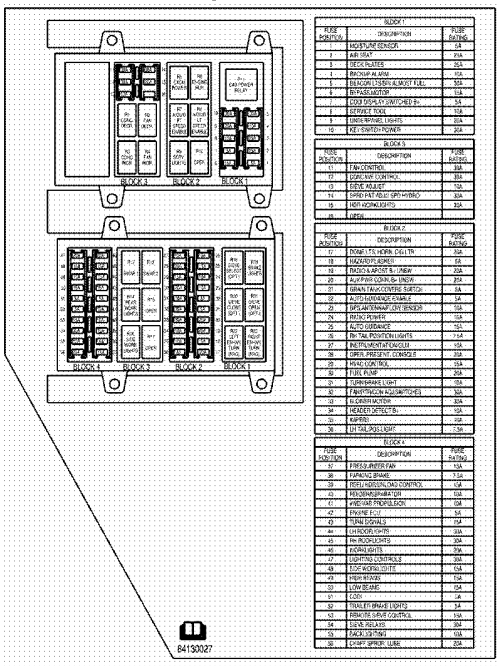

BLOCK 1		
FUSE POSITION	DESCRIPTION	FUSE RATING
1	MOISTURE SENSOR	5A
2	AIR DRAT	15A
3	DECK PLATES	25A
4	BACKUP ALARM	10A
5	BEACON LIGHTS (ALMOST FULL)	10A
6	BYPASS MOTOR	15A
7	CDS DISPLAY (SWITCHED B+)	5A
8	SERVICE TOOL	15A
9	UNDERWHEEL LIGHTS	20A
10	KEY (SWITCH POWER)	20A

BLOCK 3		
FUSE POSITION	DESCRIPTION	FUSE RATING
16	FAN CONTROL	20A
17	COOLING CONTROL	20A
18	SIEVE ADJUST	15A
19	SHED PAT ADJ (GPS HYBRID)	20A
20	HDR (WORKLIGHTS)	20A
21	UNDEF	

BLOCK 2		
FUSE POSITION	DESCRIPTION	FUSE RATING
11	DOME LTS, HORN, DEL LTR	20A
12	HAZARD FLASHER	5A
13	RADIO & ARCRT & UNDEF	20A
14	AUX PWR (CONS & UNDEF)	25A
15	GRAIN TANK COVERS SWITCH	5A
16	AUTO GUIDANCE CONSOLE	5A
17	DPLAN (DRAWER, DIV BRIDGE)	15A
18	RADIO POWER	15A
19	AUTO GUIDANCE	15A
20	RH TAIL POSITION LIGHTS	15A
21	INSTRUMENTATION CLUS	15A
22	DRVR PRESENT CONSOLE	20A
23	HVAC CONTROL	15A
24	FUEL PUMP	20A
25	TURNSIGNAL LIGHT	15A
26	FAN (TRACION & ASSISTSHED)	10A
27	BLOWER MOTOR	20A
28	HEADER DETECTOR	10A
29	KEYED	15A
30	LH TAIL (PSS) LIGHT	15A

BLOCK 4		
FUSE POSITION	DESCRIPTION	FUSE RATING
31	FRESH WATER FAN	10A
32	PARKING BRAKE	15A
33	FEED HORIZONTAL CONTROL	10A
34	HEADER (SPARTAN)	10A
35	ANDEAR PROPULSION	10A
36	ENGINE ECU	5A
37	TURN SIGNALS	15A
38	LH ROOF LIGHTS	20A
39	RH ROOF LIGHTS	20A
40	HORN LIGHTS	20A
41	LIGHTING CONTROLS	20A
42	ECM (WORKLIGHTS)	15A
43	HIGH BEAMS	15A
44	LOW BEAMS	15A
45	ECM	5A
46	TRAILER (BRAKE LIGHTS)	5A
47	REMOTE SERVE CONTROL	15A
48	ECM (RELAYS)	20A
49	ECM (SYSTEM)	15A
50	CHAFF SPREDR (USB)	25A

14

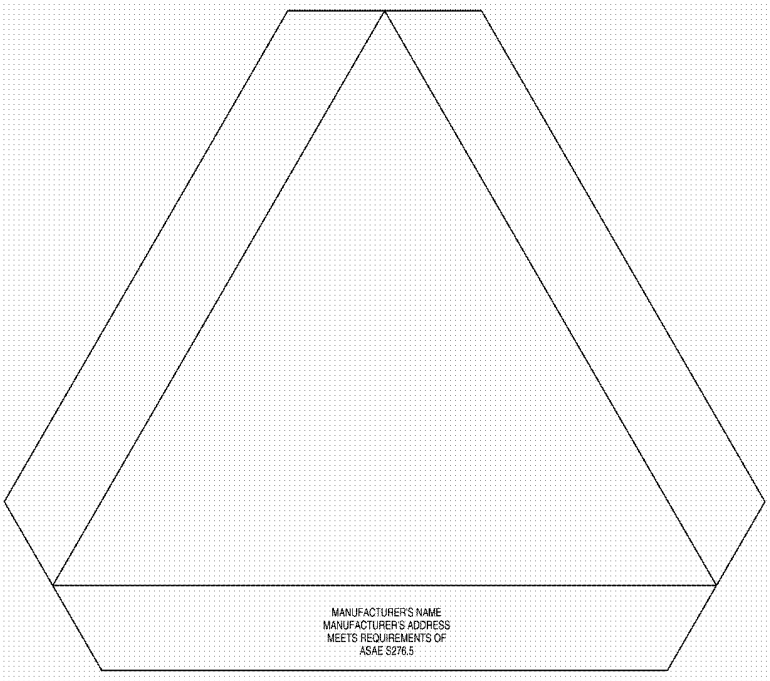

PDF created with pdfFactory trial version www.pdffactory.com

ссылка	Номер детали	Кол-во	Описание
1	234924A1	1	DECAL, Important Clean Engine, Russian
1	1300039C1	1	DECAL, Important Clean Engine, French
1	1300394C1	1	DECAL, Important Clean Engine, German
1	173881C1	1	DECAL, Important Clean Engine, United Kingdom
1	1977240C1	1	DECAL, Important Clean Engine, Danish
1	1968925C1	1	DECAL, Important Clean Engine, Italian
1	1300395C1	1	DECAL, Important Clean Engine, Spanish
1	278559A1	1	DECAL, Important Clean Engine, Portuguese
1	302476A2	1	DECAL, Important Clean Engine, Romanian
2	144382A1	1	DECAL, Read Operator Manual
2	233448A1	1	DECAL, Read Operator Manual, Russian
2	256147A1	1	DECAL, Read Operator Manual, Spanish, Portuguese, Romanian
3	84176489	1	DECAL, Lower Fuse/Relay
4	87711002	1	DECAL, Upper Relay
5	84012892	1	DECAL,
6	87396791	1	DECAL,
7	87720294	1	DECAL, Lubrication, Left Hand
8	87720295	1	DECAL, Lubrication, Right Hand
9	87488845	1	DECAL, Lubrication, Top
10	401533A1	1	DECAL, Hydraulic Oil Level
11	84072701	1	DECAL, 25 kph, French
12	9513272	3	20 kph, German
13	87393649	1	DECAL, German
14	311858A1	1	DECAL, Slow Moving Vehicle, Danish

PDF created with pdfFactory trial version www.pdffactory.com

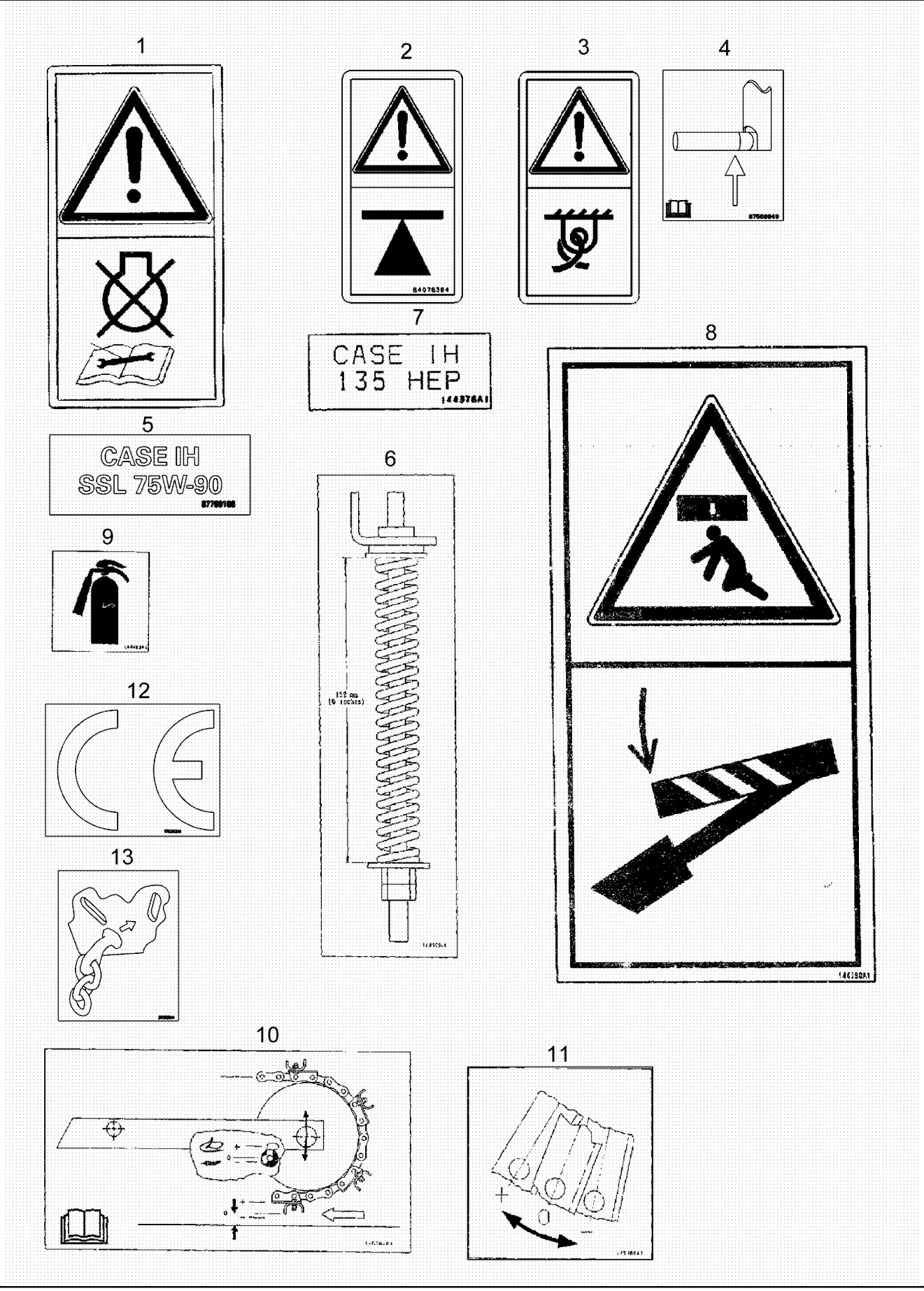

PDF created with pdfFactory trial version www.pdffactory.com

7088 AXIAL-FLOW COMBINE (EU) (4/08-)

09H-33 DECALS, IMPORTANT

ссылка	Номер детали	Кол-во	Описание
1	84004733	1	DECAL,
2	84078384	4	DECAL,
3	84100296	2	DECAL,
4	87568949	1	DECAL, Ladder Unlatch, Lower Black
5	87709106	1	DECAL, Case IH SSL 75W-90
6	144369A1	1	DECAL, Elevator Drive Adjust
7	144378A1	2	DECAL, Case IH 135 HEP
8	144380A1	2	DECAL, Lift Cylinder
9	144483A1	1	DECAL, Fire Extinguisher
10	175782A1	1	DECAL, Feeder Drum Adjust, Without Retarder
11	175784A1	3	DECAL, Vane Position
12	176262A1	1	DECAL, CE Designation
13	283528A1	6	DECAL, T-Hook

PDF created with pdfFactory trial version www.pdffactory.com

PDF created with pdfFactory trial version www.pdffactory.com